Vol. I

TRANSCRIPT OF RECORD

Supreme Court of the United States

OCTOBER TERM, 1934

No. 102

SAMUEL B. SMITH, PETITIONER,

vs.

E. H. SNOW AND E. H. SNOW, DOING BUSINESS AS SNOW'S HATCHERIES AND SNOW'S INCUBATOR COMPANY.

ON WRIT OF CERTIORARI TO THE UNITED STATES CIRCUIT COURT OF APPEALS FOR THE EIGHTH CIRCUIT.

PETITION FOR CERTIORARI FILED JUNE 11, 1934.

CERTIORARI GRANTED OCTOBER 8, 1934.

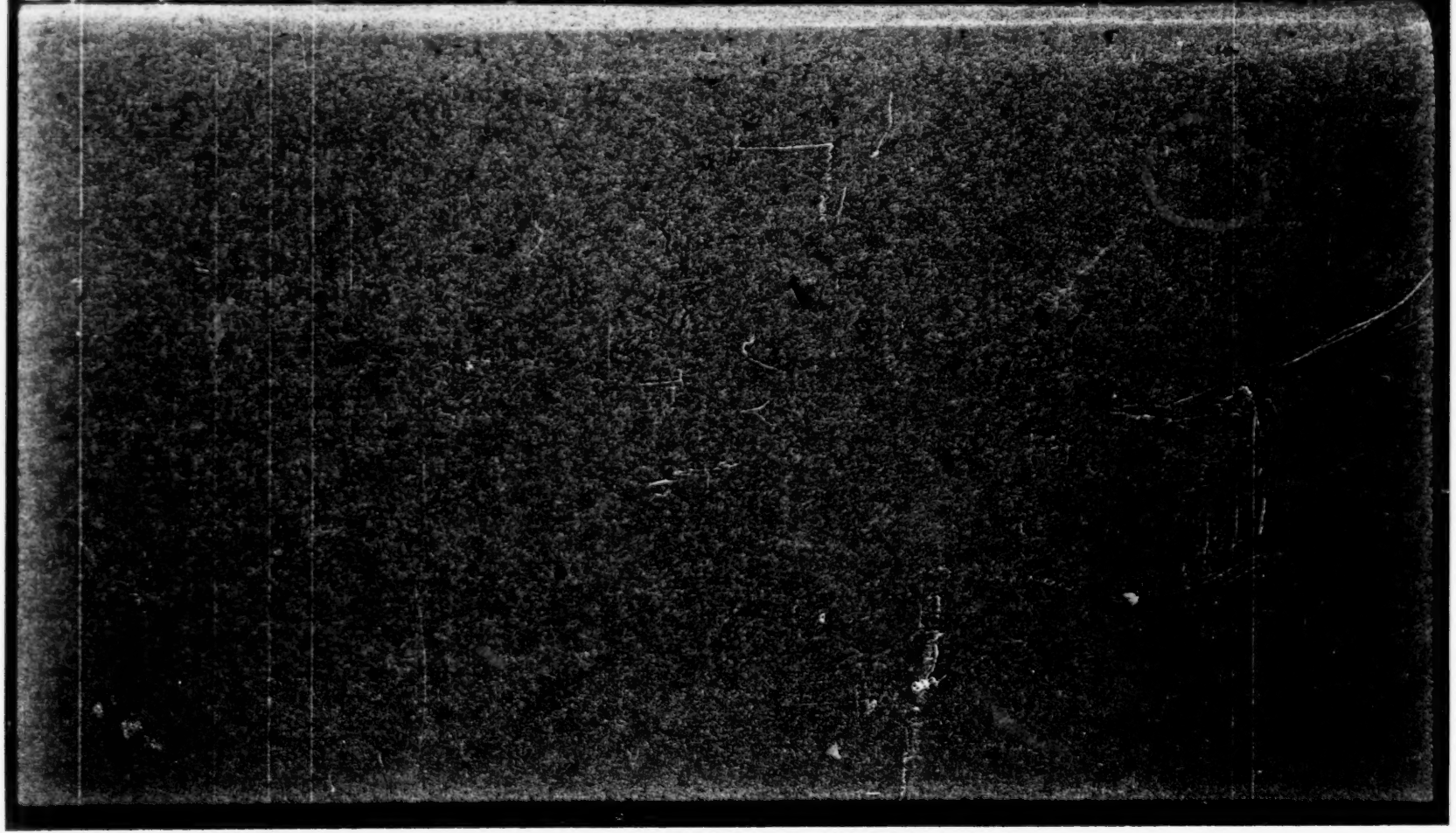

United States Circuit Court of Appeals

EIGHTH CIRCUIT.

No. 9757

IN EQUITY.

E. H. SNOW, AND E. H. SNOW DOING BUSINESS AS SNOW'S HATCHERIES AND SNOW'S INCUBATOR COMPANY, APPELLANTS,

vs.

SAMUEL B. SMITH, APPELLEE.

APPEAL FROM THE DISTRICT COURT OF THE UNITED STATES FOR THE DISTRICT OF MINNESOTA.

FILED MAY 29, 1933.

INDEX.

	Original	Print
Bill of Complaint	1	1
Bill of Particulars	6	4
Answer as Amended	7	5
Order that Defendants prepare further and better statement specifying patents, etc., upon which they will rely	19	16
Acknowledgment of Service of Response of Defendants	20	17
Response of Defendants to Order directing them to prepare further and better statement specifying patents, etc., upon which they will rely	21	18

	Original	Print
Stipulation as to Introduction of uncertified copies of letters patents, etc	24	20
Opinion of District Court	973	20
Decree, February 11, 1933	979	24
Petition for Appeal and allowance thereof	982	26
Bond on Appeal	984	27
Assignment of Errors	986	29
Citation and Admission of Service	999	42
Stipulation for extension of time to file Transcript	1001	43
Order extending time to file Transcript	1001	43
Stipulation for further extension of time to file Transcript	1002	44
Order further extending time to file Transcript	1002	44
Stipulated Praecipe for Transcript	1003	44
Approval of Praecipe by District Judge	1011	54
Stipulation that certain exhibits be sent to Circuit Court of Appeals as original exhibits and Order granting same	1012	54
Statement of Evidence	26	55
Caption	26	55
Testimony for Plaintiff	27	56
Joseph I. Taggart	27	56
Harry B. Perkins	155	131
Earl H. Snow	158	133
Joseph I. Taggart, recalled	158	133
Testimony for Defendants	159	134
Samuel B. Smith	159	134
E. H. Snow	167	140
Nora Snow	245	181
Frank B. Rowley	246	182
Testimony for Plaintiff in Rebuttal	571	375
Lena Laux	571	375
Clarence J. Holmes	599	391
Malcolm G. Reynolds	601	392
Harold E. Davis	603	394
Joseph I. Taggart	606	396
Testimony for Defendants in surrebuttal	636	414
Nora Snow	636	414

Index, Volume 2

Plaintiff's Exhibits	654	425
1, Letters Patent No. 1,262,860 to S. B. Smith, April 16, 1918	654	425
2, Chart showing days of incubation	661	433
3, Record of heat development in eggs of common fowl	662	435
4, Photograph of eggs attached to Exhibit 3	663	437
5, Pencil sketches showing circuits of air	664	439
6, Photograph showing front and side of Smith Commercial Machine	665	441
6-A, Photograph of front view of Smith Commercial Machine	666	443
6-B, Photograph of interior front view of Smith Commercial Machine	667	445
6-C, Photograph of interior side view of Smith Commercial Machine	668	447
7, 7-A and 7-B, Scale drawings showing interior sectional views of Smith Commercial Machine	669	449
8, 8-A and 8-B, Snow Advertisements (Original exhibits)	672	455

	Original	Print
9, Contract for purchase of Snow Machine by Ralph Hopkins from Snow Incubator Company, July 3, 1931	673	457
10, Photograph of front view of Snow Machine	674	459
10-A, Photograph showing front and side view of Snow Machine.	675	461
10-B, Photograph of interior front view of Snow Machine	676	463
10-C, Photograph of interior side view of Snow Machine	677	465
10-D, Photograph of interior of Snow Machine with side trays removed	678	467
10-E, Photograph of detailed view hatching rack of Snow Machine	679	469
11, Catalogue of Robbins Incubator Company (Original exhibit)	680	471
12 to 12-KK, Photographs of Taggart's test data sheets relating to Snow Machine	681	473
13 to 13-KK, Colored photographs of test data sheets relating to Snow Machine	692	495
15, Drawing of Taggart's Scale of Snow's Sleepy Eye Machine.	701	513
18, Contract for purchase of incubator by E. H. Snow from Smith Incubator Company, June 13, 1925	702	515
19, Tabulation of incubators sold by Smith and Buckeye Companies	703	517
20, Letter, E. H. Snow to Dr. S. M. Smith, October 30, 1924	704	519
21, Letter, Smith Incubator Company to E. H. Snow, November 4, 1924	705	521
22 and 23, Colored Diagrams of Rowley's Test Data sheets	706	523
14, Model (Original exhibit)	708	527
Defendants' Exhibits	709	529
A, Page from Cleveland "Sunday Plain Dealer" of February 23, 1913	709	529
B, Page from "Cleveland Leader" of February 22, 1914	710	531
C, Sketch—Snow's egg setting	711	533
D-1 to D-5, Photographs of Different view of Snow Machine	712	535
D-1, Interior from doorway—One water pan removed	712	535
D-2, Interior from doorway—Both water pans in place	713	537
D-3, Interior—Some trays removed—showing one agitator	714	539
D-4, Exterior view of front	715	541
D-5, Exterior view of front and side	716	543
E-1 to E-3, Photographs of different views of Sleepy Eye Machine	717	545
E-1, Photograph of interior view from door	717	545
E-2, Photograph of interior view from door with Mr. Snow in corridor	718	547
E-3, Exterior view	719	549
G-1 to G-3, Photographs of different views of Snow's Smith Machine	720	551
G-1, Name plate on door	720	551
G-2, Interior view from doorway	721	553
G-3, Interior view from doorway with one fan panel dropped.	722	555
J-1 and J-2, Diagrams of Rowley's Test Smith Machine	723	557
L-1 to L-5, Drawings of Snow Incubator	725	561
L-1, Front elevation	725	561
L-2, Side elevation	726	563
L-3, Longitudinal Section	727	565
L-4, Cross-Section	728	567
L-5, Details of Incubator	729	569

	Original	Print
M-1 to M-7, Diagrams of Rowley's Test Data of Snow Machine.	730	571
N-1 to N-3, Pencil sketch of Rowley's Test Data of Snow's Sleepy-Eye Machine	737	585
O, File Wrapper and Contents of Smith Letters Patent in suit, Memorandum as to	740	591
P, Letters Patents	741	593
United States Letters Patents	741	593
No. 120,253 to H. Endemann, October 24, 1871	741	593
No. 152,644 to E. A. Jones and C. W. Jones, June 30, 1874.	745	597
No. 272,744 to A. H. Morgan, February 20, 1883	751	603
No. 286,756 to C. F. Winkler, October 16, 1883	758	609
No. 297,676 to G. Conant, April 29, 1884	768	619
No. 330,457 to C. Bassini & A. Heyden, November 17, 1885.	771	623
No. 344,474 to J. W. Campbell, June 29, 1886	778	631
No. 559,676 to T. R. C. Christianson, May 5, 1896	784	637
No. 591,870 to F. H. Morgan, October 19, 1897	794	647
No. 691,837 to V. S. Bell, January 28, 1902	802	655
No. 709,650 to O. P. Scott, September 23, 1902	808	661
No. 745,458 to F. C. Perkins, December 1, 1903	814	667
No. 828,181 to G. H. Boyd, August 7, 1906	824	677
No. 891,019 to L. Verna, June 16, 1908	831	683
No. 916,454 to V. C. Koons, March 30, 1909	836	689
No. 949,653 to J. H. Klinke, February 15, 1910	852	705
No. 1,100,146 to J. O. Olson, June 16, 1914	858	711
No. 1,137,752 to G. E. Goldstein, May 4, 1915	862	715
No. 1,160,793 to S. S. Van Keuren, November 16, 1915	866	719
German Letters Patent No. 155917 to E. Stulik, November 7, 1901	875	729
Translation of German Letters Patent	878	737
United States Letters Patents	883	745
No. 3,019 to N. E. Guerin, March 30, 1843	883	745
No. 360,223 to E. H. Johnson, March 29, 1887	894	757
No. 426,321 to J. K. Proctor and J. H. Knowles, April 22, 1890	901	765
No. 843,909 to F. M. Peters and H. H. Hungerford, February 12, 1907	908	773
No. 992,622 to J. Wiebe, May 16, 1911	914	779
No. 1,010,809 to J. Schmidt and H. Schutterle, December 5, 1911	918	783
No. 1,075,747 to C. W. Zimmer, October 14, 1913	930	795
Q, Cover and Pages 652 and 653 of Ure's Dictionary of Arts, Manufactures and Mines	940	805
R, Pages 2704 and 2705 of Knight's American Mechanical Dictionary	943	811
S, Sketch of Compartment of Smith's 1913 and 1914 Machine.	945	815
T, Letters Patent No. 535,175 to C. W. Schwartz, Jr., March 5, 1895	946	817
U, Interior view of Incubator of E. H. Snow	962	833
V, Letters Patent No. 1,562,787 to I. M. Petersime, November 24, 1925	963	835
Plaintiff's Exhibits 16 and 17, Models (Original exhibits)	971	843
Defendants' Exhibits F and H, Models (Original exhibits)	971	843
Stipulation of Counsel approving Statement of Evidence	972	843
Approval of Statement of Evidence by District Judge	972	843

	Original	Print
Clerk's Certificate to Transcript	1013	844
Stipulation to forward Defendant's Exhibit O, File Wrapper and Contents of Letters Patent No. 1,262,860 to S. B. Smith, April 16, 1918 to United States Circuit Court of Appeals, and that copies thereof be included in printed record	1	844
Order of United States District Judge approving stipulation	2	846
File Wrapper and Contents of Letters Patent No. 1,262,860 to S. B. Smith, April 16, 1918	3	847
Record of filings	3	847
Letter to Commissioner of Patents, October 24, 1916	3a	849
Petition	4	851
Specification	4	851
Oath	14	871
Communication from Commissioner of Patents, November 1, 1916	15	873
Letter to Commissioner of Patents, March 3, 1917	18	879
Communication from Commissioner of Patents, March 24, 1917	21	885
Letter to Commissioner of Patents, April 5, 1917	25	893
Communication from Commissioner of Patents, April 12, 1917	28	899
Letter to Commissioner of Patents, April 20, 1917	30	903
Communication from Commissioner of Patents, May 3, 1917	34	911
Letter to Commissioner of Patents, June 13, 1917	35	913
Letter to Commissioner of Patents, June 26, 1917	36	915
Communication from Commissioner of Patents, June 30, 1917	39	921
Letter to Commissioner of Patents, February 9, 1918	41	925
Affidavit of Samuel B. Smith	45	933
Affidavit of George Cugley	46	935
Drawings 1 to 5	49	941
Drawings A to E	54	951
Letter to Commissioner of Patents	59	961
Communication from Commissioner of Patents advising of allowance of patent, March 12, 1918	60	963
Letter to Commissioner of Patents	61	965
Contents	62	967
Letters Patent No. 1,262,860 to S. B. Smith, April 16, 1918	64	971
Certificate of Clerk to Stipulation	70	981
Proceedings in U. S. Circuit Court of Appeals	982	982
Appearance of Mr. Ralph E. Williamson as Counsel for Appellants.	982	982
Appearance of Mr. James F. Williamson as Counsel for Appellants.	982	982
Appearance of Mr. A. L. Ely as Counsel for Appellee	983	982
Appearance of Mr. A. C. Paul as Counsel for Appellee	983	983
Appearance of Mr. Maurice M. Moore as Counsel for Appellee	983	983
Order of Argument	984	983
Order of Submission	984	983
Opinion, U. S. Circuit Court of Appeals	985	984
Decree, U. S. Circuit Court of Appeals	994	991
Petition of Appellee for Rehearing	995	993
Letters Patent No. 1,728,980, to John L. Robbins, Sept. 24, 1929.	1002	1002
Order denying Petition for Rehearing	1005	1005
Petition for Stay of Mandate	1005	1005
Order Staying Issuance of Mandate	1006	1005
Clerk's Certificate to Transcript	1007	1006
Order allowing certiorari		1007

Pleas and proceedings in the United States Circuit Court of Appeals for the Eighth Circuit, at the March Term, 1934, of said Court, before the Honorable Kimbrough Stone and the Honorable John B. Sanborn, Circuit Judges, and the Honorable A. Lee Wyman, District Judge.

Attest:

E. E. KOCH,
Clerk of the United States Circuit Court of Appeals for the Eighth Circuit.

(Seal)

Be it Remembered that heretofore, to-wit: on the twenty-ninth day of May, A. D. 1933, a transcript of record pursuant to an appeal allowed by the District Court of the United States for the District of Minnesota, was filed in the office of the Clerk of the United States Circuit Court of Appeals for the Eighth Circuit, in a certain cause wherein E. H. Snow, and E. H. Snow doing business as Snow's Hatcheries and Snow's Incubator Company, were Appellants, and Samuel B. Smith was Appellee, which said transcript as prepared and printed under the rules of the United States Circuit Court of Appeals for the Eighth Circuit, under the supervision of its Clerk, is in the words and figures following, to-wit:

1

Bill of Complaint.

In the United States District Court of Minnesota, Second Division.

Samuel B. Smith, Plaintiff,
No. 2119. vs. In Equity.
E. H. Snow and E. H. Snow, d. b. a. Snow's Hatcheries and Snow's Incubator Company, Defendants.

To The Honorable the Judges of the United States District Court of Minnesota, Second Division:

Plaintiff represents and states as follows:

1. That the plaintiff, Samuel B. Smith, is a citizen of the United States and a resident of Cleveland, Ohio.

2. Upon information and belief that the defendant, E. H. Snow, resides at Sleepy Eye, Brown County, Minnesota, and that E. H. Snow, doing business as Snow's Hatcheries and Snow's Incubator Company, is located at Sleepy Eye, Brown County, Minnesota, where the said defendants are engaged and doing business in the commercial hatching of eggs.

3. The jurisdiction of this Court depends upon the fact that this suit is one arising under the patent laws of the United States.

4. Upon information and belief that prior to October 26, 1916, the plaintiff, Samuel B. Smith, was the first, original and sole inventor of certain new and useful improvements in Incubators, not known or used by others before his invention or discovery thereof, not patented or described in any printed publication in this or any foreign country prior to his invention thereof or more than two years prior to October 26, 1916, not in public use or on sale in this country for more than two years prior to said date, not abandoned, and not patented by Samuel B. Smith or his legal representatives or assigns upon an application filed more than twelve months prior to said date.

2

5. On October 26, 1916, the plaintiff, Samuel B. Smith, filed in the United States Patent Office an application for Letters Patent of the United States for said improvement.

6. That prior to April 16, 1918, Samuel B. Smith assigned the right, title and interest in and to the said invention and in and to any United States patent to issue thereon to The Buckeye Incubator Company, a corporation of Ohio, and that after due proceedings upon the said application for patent there was issued to The Buckeye Incubator Company, aforesaid, United States Letters Patent No. 1,262,860 on April 16, 1918, whereby the exclusive right of making, using and selling the said invention and improvements throughout the United States for the term of said patent was granted to The Buckeye Incubator Company, aforesaid, its successors or assigns, as will more fully appear from the original or duly certified copies of the said patent and assignment to be produced in Court herein.

7. That under date of April 29, 1927, The Buckeye Incubator Company, aforesaid, being then the owner of the title in and to the aforesaid Letters Patent, did sell, assign and transfer to the plaintiff, Samuel B. Smith, his heirs
3 and assigns, the right, title and interest in and to the said Letters Patent as will more fully appear from the original assignment or duly certified copy thereof to be produced in Court herein.

8. That the plaintiff and his predecessor in title, The Buckeye Incubator Company, have been at all times the sole and exclusive owners of the said patent.

9. That the said patented invention has proven to be of very great value, that the plaintiff has expended large sums of money in the manufacture and sale of incubators embodying the invention thereof, that the incubators so manufactured and sold have acquired a high reputation and utility and have proven to possess superior functions and qualities over other incubators, that the said patent has been widely recognized and respected, and that the validity of said patent has been established in litigations arising thereunder in various Circuit Courts of Appeal and District Courts of the United States.

10. That incubators manufactured and sold by the plaintiff have been marked "Patented" together with the date and number of the patent aforesaid as required by the Statutes of the United States, and that in addition the defendants herein have been duly notified in writing of the patent aforesaid and of their infringement thereof.

11. Upon information and belief that the defendants prior to and not more than six years before the filing of the Bill of Complaint herein, have manufactured, sold and offered for sale to others and are using in the hatching of eggs at their place of business at Sleepy Eye, Minnesota, and other locations in Minnesota, incubators embodying and operating in accordance with the invention of said, patent No. 1,262,860 and are threatening to continue the manufacture, sale and use of such incubators, thereby infringing the rights of
4 the plaintiff as secured by the said patent, all without the license or consent of the plaintiff.

12. That by reason of the infringement complained of herein, the plaintiff has suffered and is suffering irreparable loss and damage and the defendants have realized profits and gains which of right belong to the plaintiff, and will continue to do so unless restrained by this Court.

Wherefore the plaintiff prays:

1. That a writ of subpoena may issue out of this Court directed to the defendants, E. H. Snow and E. H. Snow doing business as Snow's Hatcheries and Snow's Incubator Company, commanding them to appear and answer all and singular the matters and things herein complained of,, but not under oath, an answer under oath being expressly waived.

2. That temporary and permanent injunction be issued out of this Court addressed to the defendants, E. H. Snow and E. H. Snow doing business as Snow's Hatcheries and Snow's Incubator Company, and their workmen, employees, solicitors, agents, attorneys and others claiming or holding under the defendants, enjoining and restraining them from in any manner directly or indirectly infringing upon the patent sued upon herein.

3. That the defendants be required to account for and pay to the plaintiff all the gains and profits acquired by them and recompense the plaintiff for the damages sustained by the plaintiff by reason of the infringement complained of herein.

4. That the defendants pay the costs of this suit, and that such other further and equitable relief be granted to the plaintiff as shall be found necessary or proper.

SAMUEL B. SMITH,
By Paul, Paul & Moore,
His Solicitors.

A. C. Paul,
Maurice Moore,
A. L. Ely,
Of Counsel.

5 Verification.

State of Ohio,
County of Cuyahoga—ss.

Samuel B. Smith, being duly sworn, deposes and says that he is the plaintiff named in the foregoing Bill of Complaint, that he is the owner of the title in and to the said United States Letters Patent No. 1,262,860, that the contents of the said Bill of Complaint are true of his own knowledge, except as to such matters alleged upon information and belief and as to such matters he believes the same to be true, and that he believes himself to be the original and sole inventor of the improvements in incubators disclosed and covered in the said patent.

SAMUEL B. SMITH.

Subscribed and Sworn to Before Me This 3rd Day of July, 1931.

(Seal) H. B. PERKINS,
Notary Public, Cuyahoga County, Ohio.

My Commission Expires March 17th, 1934.

(Endorsed): Filed Sep. 11, 1931. Joel M. Dickey, Clerk, By Chell M. Smith, Deputy.

---

6 Bill of Particulars.

Now Comes Plaintiff and states that it will rely, at the trial of this cause, to support its allegation of infringement, upon claims 1 and 2 of the Samuel B. Smith patent, No. 1,262,860 of April 16, 1918, in suit.

MAURICE M. MOORE,
PAUL, PAUL & MOORE,
Solicitors for Plaintiff.

Minneapolis, Minnesota,
October 6, 1931.

Service of the above Bill of Particulars with copy is hereby acknowledged this 6th day of October, 1931.

WILLIAMSON & WILLIAMSON,
Solicitors for Defendant.

(Endorsed): Filed Oct. 7, 1931, Joel M. Dickey, Clerk, By Thomas H. Howard, Deputy.

---

7 Defendants' Answer as Amended.

E. H. Snow, doing business under the names, "Snow's Hatcheries" and "Snow's Incubator Company", defendant, in answer to the plaintiff's Bill of Complaint and Bill of Particulars, hitherto filed in the above entitled suit, avers as follows:—

I.

The defendant admits the allegations made in paragraphs 1, 2 and 3 of said Bill of Complaint.

II.

The defendant denies each and all of the allegations contained in paragraph 4 of said Bill of Complaint, and the defendant avers, on information and belief, that the said Samuel B. Smith was not the true, original and first inventor of any of the alleged improvements in incubators, or in methods of hatching eggs disclosed in the Smith patent in suit, 1,262,860, of April 16, 1918, and pointed out in the relied upon claims thereof numbered 1 and 2, but that, on the contrary all of said alleged improvements in incubators or in methods of hatching eggs, disclosed in said patent and pointed out in said relied upon claims, were old and well known in the prior art, had been patented and described in numerous prior patents and had been in public use in the United States by said Samuel B. Smith and others and been abandoned to the public at dates more than two years before the said Samuel B. Smith filed his application which matured into said Smith patent 1,262,860 here in suit.

III.

Having regard to the allegations made in paragraphs 5, 6, 7, and 8 of said Bill of Complaint, the defendant
8 admits that said Samuel B. Smith did, on the 26th day of October, 1916, file in the U. S. Patent Office, an application for U. S. Letters Patent, and that, on April 16, 1918, the patent in suit, 1,262,860, was issued to the Buckeye Incubator Company as the alleged assignee of said Samuel B. Smith, but the Defendant denies each and every other allegation contained in said paragraphs 5, 6, 7 and 8, and avers, on information and belief, that the said application for patent was filed by said Samuel B. Smith, in violation of the law, and that said patent in suit, 1,262,860, of April 16, 1918, was granted by the Commissioner of Patents to said Buckeye Incubator Company in violation of the law; and the defendant further avers on information and belief, that the alleged assignment identified in paragraph 7 of the Bill of Complaint

was an illegal instrument inconsistent with other existing written contracts previously executed by said Samuel B. Smith and said Buckeye Incubator Company, and which was, therefore, ineffective to invest in said Samuel B. Smith, any exclusive title or interest in the said patent, and hence, defendant further avers on information and belief, that the said Samuel B. Smith, the plaintiff herein, has no title to the patent in suit and has no right to bring this suit, or any suit under the said patent.

IV.

The defendant, on information and belief, denies each and every allegation contained in paragraph 9 of said Bill of Complaint.

V.

Respecting the two allegations contained in paragraph 10 of said Bill of Complaint, the defendant, on information and belief, denies the first thereof (relating to the marking of plaintiff's incubators) and admits the second (relating to the alleged notice of infringement given by the plaintiff to defendant); but the defendant avers that, immediately after receiving the said notice of alleged infringement, he had a careful investigation made by competent patent attorneys, and was advised by said attorneys that said charge of infringement was ill-founded and unsustainable in the Courts and that, in the opinion of said attorneys, the
9 defendants were not infringing any of the claims of the Smith patent in suit, 1,262,860.

VI.

The defendant, upon information and belief, denies each and all of the allegations contained in paragraphs 11 and 12 of said Bill of Complaint; and the defendant avers, upon information and belief, that he has never, at any time or place, manufactured and sold, or offered for sale, within the United States, or elsewhere, any incubators embodying and operating in accordance with the alleged invention disclosed in said Smith patent in suit, 1,262,860, and pointed out in the relied upon claims thereof, numbered 1 and 2, or pointed out in any of the other claims of said patent, and has no intention of so doing; and the defendant further avers that he has never at any time or place within the United States, without the authority first duly received from the owner or owners of said Smith patent in suit, 1,262,860, ever used any incubators embodying and operating in accordance with the said alleged invention disclosed in said patent, and pointed out in said relied upon claims 1 and 2 thereof, or pointed out

in any other claims of said patent; and the defendant further avers, on information and belief, that he has never realized any profit or gain which, of right belongs to the plaintiff, and has never done any illegal act causing any loss, injury or damage to the plaintiff, and has never threatened so to do and has no intention of so doing.

VII.

Further answering, the defendant, on information and belief, avers that the said Samuel B. Smith patent in suit, 1,262,860, of April 16, 1918, applied for October 26, 1916, is, as to the relied upon claims 1 and 2 thereof, invalid and of no effect in law, for the reason that the alleged invention, or method of hatching eggs disclosed in said patent and pointed out in the relied upon claims 1 and 2 thereof, had been put into public commercial use by the said Samuel B. Smith in the United States, at Attica, Ohio, and at Cleveland, Ohio, at dates more than two years before the said Samuel B. Smith filed in the Patent Office his said application which matured into his said patent here in suit and this usage or practice of said invention was effected by said Smith at said places in incubators designed and built by him, or under his direction; and the hereinbelow named persons whose residences appear opposite their respective names, had knowledge of the said usage of said machines, at said places, to-wit:

Samuel B. Smith	Cleveland Ohio,
James W. Miller,	Bucyrus, Ohio.
Albert H. Wilson	Toledo, Ohio,
Edward H. Uhle,	Cleveland, Ohio,
Mr. & Mrs. Carrick,	Cleveland, Ohio;

and the defendant further alleges that one or more of the said incubating machines used by said Smith at Attica, and at Cleveland, Ohio, for carrying into effect his said method of hatching eggs disclosed in said patent in suit and pointed out in claims 1 and 2 thereof, was referred to and described in a newspaper article published in the Sunday Plain Dealer, of Cleveland, Ohio, in its issue of Sunday, February 23rd, 1913, entitled "Mammoth Incubator will Turn out 20,000 Chicks per Week", and also, in an article published in the Cleveland Leader, of Cleveland, Ohio, Sunday, February 22nd, 1914, entitled "Cleveland Boasts Largest Hatchery".

VIII.

Further answering, the defendant, on information and belief, avers that the said Samuel B. Smith patent in suit 1,262,860,

of April 16, 1918, applied for October 26, 1916. is, as to the relied upon claims 1 and 2 thereof, invalid and of no effect in law for the reason that the alleged invention or method of hatching eggs disclosed in said patent and pointed out in said relied upon claims 1 and 2 thereof, had been put into public use in the United States on Walter B. Davis' farm at Brooklyn, N. Y., and at Muskogee, Okla., and at Port O'Connor, Texas, by Milo M. Hastings, of New York City, at dates more than two years before the said Samuel B. Smith filed in the Patent Office his application which matured into said patent here in suit, and said usage of said invention was effected by said Milo M. Hastings in incubators designed and built by him or under his direction,
11 and the hereinbelow named persons, whose residences appear opposite their respective names, had knowledge of said usage, to-wit:—the following three persons had knowledge of said usage on the Walter B. Davis farm at Brooklyn, N. Y., namely:—

Milo M. Hastings, White Plains Road, Tarrytown, N. Y.
Walter B. Davis, Jersey City, N. J.
Edgar Chambless, 122 East 34th Street, New York City, N. Y.;

and the following four persons had knowledge of the said usage at Muskogee, Okla., to-wit:—

C. T. Brewer,	Muskogee, Okla.,
Mr. and Mrs. John G. Lieber,	Muskogee, Okla.,
Edward Hastain,	Phoenix, Arizona.,
Reese V. Hicks,	Kansas City, Mo.;

and the defendant further alleges that the structure and mode of operation of said Hastings incubator used by him at Muskogee, Okla., was described in an article entitled "The Mammoth Incubator Out-Mammothed", published at Topeka, Kansas, in a periodical entitled "Poultry Culture", issue for February 1912, Vol. XV. No. 5, pages 7, 14 and 15 thereof, copy in U. S. Department of Agriculture Library, Washington, D. C.; and the following persons had knowledge of said usage at Port O'Connor, Texas, to-wit:—

Milo M. Hastings,	White Plains Road, Tarrytown, N. Y.
E. T. Powers,	Port O'Connor, Texas.

IX.

Further answering, the defendant, on information and belief, avers that the said Samuel B. Smith patent in suit 1,262,-860, of April 16, 1918, applied for October 26, 1916, is, as to the relied upon claims 1 and 2 thereof, invalid and of no

effect in law, for the reason that the alleged invention or method of hatching eggs disclosed in said patent and pointed out in said relied upon claims 1 and 2 thereof, had been put into public use in the United States, by Rolla Lawry, at Pacific, Missouri, at dates more than two years before the said Samuel B. Smith filed in the Patent Office his application which matured into his said patent here in suit, and said usage of said alleged invention at Pacific, Mo., was effected by said Rolla Lawry in one or more incubators designed and built by him, or under his direction, and operated by him at the said place, and the hereinbelow named person whose residences appear opposite their respective names, had knowledge of said usage, to-wit:—

Rolla Lawry, 336 Orchard Ave., Webster Groves, St. Louis, Mo.,
Gordon A. Scott, 300 South Walnut Street, Seymour, Indiana.

12 and others now unknown to the defendant, but whose names and addresses, when ascertained, the defendant prays leave to add by amendment to this, his Answer in this suit.

X.

The defendant, further answering, avers, on information and belief, that the said Samuel B. Smith patent in suit, 1,262,860, of April 16, 1918, is, as to the relied upon claims 1 and 2 thereof, invalid and of no effect in law, for the reason that said Samuel B. Smith was not the true, original and first inventor of the method of hatching eggs, disclosed in said patent and pointed out in said relied upon claims 1 and 2 thereof, but that, on the contrary, Milo M. Hastings, of White Plains Road, Tarrytown, New York, was the true, original and first inventor of said method of hatching eggs, and was using reasonable diligence in adapting and perfecting the said invention and had reduced the same to successful practice in the United States before the same was invented or produced by said Samuel B. Smith, and that the said patent in suit was unjustly granted on an application surreptitiously and illegally filed by said Samuel B. Smith and was unjustly and illegally issued in the name of the Buckeye Incubator Company as the assignee of said Samuel B. Smith.

XI.

The defendant, further answering, avers, on information and belief, that the said Samuel B. Smith patent in suit 1,262,860, of April 16, 1918, is, as to the relied upon claims 1

and 2 thereof, invalid and of no effect in law, for the reason that said Samuel B. Smith was not the true, original and first inventor of the method of hatching eggs, disclosed in said patent and pointed out in said relied upon claims 1 and 2 thereof, but that, on the contrary, Rolla Lawry, of 336 Orchard Avenue, Webster Groves, St. Louis, Missouri, was the true, original and first inventor of said method of hatching eggs and was using reasonable diligence in adapting and perfecting said invention and had reduced the same to successful practice in the United States at Pacific, Missouri, before the said method of hatching eggs was invented or produced by said Samuel B. Smith, and that said patent in suit was issued on an application surreptitiously and illegally filed by said Samuel B. Smith and was unjustly and illegally issued to the Buckeye Incubator Company as the assignee of said Samuel B. Smith.

XII.

Further answering, the defendant avers, on information and belief, that the said Samuel B. Smith patent in suit, 1,262,860, of April 16, 1918, is, as to the relied upon claims 1 and 2 thereof, invalid and of no effect in law, for the reason that the alleged invention or method of hatching eggs, disclosed in said patent and pointed out in said relied upon claims 1 and 2 thereof, did not constitute any patentable invention over the prior art existing in the United States at the time when said alleged invention or method of hatching eggs was produced by said Samuel B. Smith and the production of said method of hatching eggs by said Samuel B. Smith did not involve the exercise of the inventive faculties of the human mind, under the law of the subject, but only involved the ordinary mechanical skill and judgment naturally to be expected from any mechanic familiar with the said prior art; and that certain material portions of said prior art as it then existed in the United States have been identified in the foregoing paragraphs VII, VIII, and IX, of this Answer, and that other material portions of which prior art are disclosed in the hereinbelow identified patents and the hereinbelow identified publications, to-wit:

Group A.

Prior Patents Cited On The File Wrapper Record Of The Smith Patent In Suit, 1,262,860, of April 16, 1918.

U. S. No. 120,253, Oct. 24, 1871, H. Endemann, "Improvement in Apparatus for Drying Fruits, Meat, Etc."

U. S. No. 152,644, June 30, 1874, E. A. Jones and C. W. Jones, "Fruit-Driers".

U. S. 272,744, Feb. 20, 1883, A. H. Morgan, "Incubator".

U. S. No. 286,756, Oct. 16, 1883, C. F. Winkler, "Incubator".

U. S. No. 297,676, Apr. 29, 1884, G. Conant, "Device for Preserving Eggs".

14 U. S. No. 330,457, Nov. 17, 1885, C. Bassini, et al., "Incubator".

U. S. No. 344,474, June 29, 1886, J. W. Campbell, "Heat Regulating Attachment for Incubators".

U. S. No. 559,676, May 5, 1896, T. R. C. Christianson, "Storing Eggs and Apparatus for Turning Them to Keep Them Fresh".

U. S. No. 591,870, Oct. 19, 1897, F. H. Morgan, "Incubator".

U. S. No. 691,837, Jan. 28, 1902, V. S. Bell, "Incubator".

U. S. No. 709,650, Sept. 23, 1902, O. P. Scott, "Incubator".

U. S. No. 745,458, Dec. 1, 1903, F. C. Perkins, "Electrical Incubator".

U. S. No. 828,181, Aug. 7, 1906, G. H. Boyd, "Incubator".

U. S. No. 891,019, June 16, 1908, L. Verna, "Drying Room".

U. S. No. 916,454, Mar. 30, 1909, V. C. Koons, "Incubator".

U. S. No. 949,653, Feb. 15, 1910, J. H. Klinke, "Incubator".

U. S. No. 1,100,146, June 16, 1914, J. O. Olson, "Incubator".

U. S. No. 1,137,752, May 4, 1915, G. E. Goldstein, "Apparatus for Curing or Artificially Aging Cigars".

U. S. No. 1,160,793, Nov. 16, 1915, S. S. Van Keuren, "Incubator".

German Pat. No. 155,917, Nov. 7, 1901, E. Stulik, "Incubating Process and Device for Group Charging and Simultaneous Treatment of the Groups of Eggs Inserted at Different Times into the Incubating Apparatus".

Group B.

Prior Patents, None Of Which Were Cited On The File Wrapper Record Of The Smith Patent In Suit, 1,262,860, Of April 16, 1918.

U. S. No. 3,019, Mar. 30, 1843, N. E. Guerin, "Egg Hatching Apparatus".

U. S. No. 193,616, July 31, 1877, E. S. Renwick, "Incubator".

U. S. No. 217,148, July 1, 1879, E. S. Renwick, "Incubator".

U. S. No. 224,224, Feb. 3, 1880, E. S. Renwick, "Incubator".

U. S. No. 271,184, Jan. 23, 1883, H. Altenbrand, "Malt Kiln".

U. S. No. 280,490, July 3, 1883, O. Lumpp, "Method of and Means for Drying Materials of Extensive Superficial Area".

U. S. No. 335,961, Feb. 9, 1886, E. S. Renwick, "Incubator".

U. S. No. 320,463, June 23, 1885, Lewis Cutting, "Egg Timing Device for Incubators".

U. S. No. 426,321, Apr. 22, 1890, J. K. Proctor & J. H. Knowles, "Drying Machine".

U. S. No. 456,407, July 21, 1891, F. Frey & A. M. Wayne, "Incubator".

U. S. No. 535,175, Mar. 5, 1895, C. W. Schwartz, "Method of and Apparatus for Ordering Tobacco".

U. S. No. 553,723, Jan. 28, 1896, J. K. Proctor, "Apparatus for Ordering Tobacco".

U. S. No. 586,088, July 6, 1897, W. P. Jones, "Incubator and Brooder".

(This Incubator Patent 586,088, was declared invalid for lack of invention over two prior patents for heating and ventilating houses in a decision rendered by the Circuit Court of Appeals for the Second Circuit Nov. 24, 1903, in a case entitled Jones vs. Cyphers, et al., reported in Volume 126 of Federal Reporter, page 753).

15 U. S. No. 599,145, Feb. 15, 1898, George Kutz, "Incubator".

U. S. No. 614,493, Nov. 22, 1898, C. S. Newsom, "Combined Incubator and Brooder".

U. S. No. 789,719, May 16, 1905, J. M. Day, "Incubator".

U. S. No. 798,697, Sept. 5, 1905, F. C. Perkins, "Incubator".

U. S. No. 832,151, Oct. 2, 1906, C. S. Newsom, "Combined Incubator and Nursery".

U. S. No. 992,622, May 16, 1911, J. Wiebe, "Egg Drier".

U. S. No. 1,010,809, Dec. 5, 1911, J. Schmidt & H. Schutterle, "Apparatus for Drying Macaroni and Like Bakery Products".

U. S. No. 1,034,205, July 30, 1912, J. C. Cogburn, "Drier".

U. S. No. 1,075,747, Oct. 14, 1913, C. W. Zimmer, "Semifireless Incubator".

U. S. No. 1,086,903, Feb. 10, 1914, A. Di Domenica & A. Amicarelli, "Drier".

U. S. No. 1,158,447, Nov. 2, 1915, C. J. Coleman, "Poultry Producing Apparatus".

U. S. No. 1,195,705, Aug. 22, 1916, P. S. Martin, "Automatic Egg Turning Device".

U. S. No. 360,223, Mar. 29, 1887, E. H. Johnson, "Electrical Apparatus for Heating and Cooling Buildings".

U. S. No. 843,909, Feb. 12, 1907, F. M. Peters & H. H. Hungerford, "Atmosphere Regulating System".

U. S. No. 917,483, Apr. 6, 1909, C. C. Peck, "Automatic Fan System of Heating".

U. S. No. 946,911, Jan. 18, 1910, G. C. Andrews, "Heating Plant".

And other prior patents now unknown to the defendant, but which, when discovered, he prays leave to add to this, his Answer to the Bill of Complaint in this suit.

Group C.

Publications.

The publications identified in paragraphs VII and VIII, of this Answer.

A book by Milo M. Hastings (pages 104-105), entitled "The Dollar Hen", published by the Arcadia Press, N. Y., 1909. Copy in New York Public Library.

An article entitled "Indoor Chicken Factories", published in the Boston Sunday Globe, of Boston, Mass., issue of November 10, 1912. Copy in the office of the Boston Globe, Boston, Mass.

An article entitled "Hatching Chickens by Wholesale", published in the Technical World, of Chicago, Illinois, issue

of April 1913, (pages 248-249). Copy in New York Public Library, N. Y.

An article entitled "Incubator" appearing on pp. 652-653 of Ure's Dictionary of Arts, Manufactures and Mines,
16 published in London, England, by Longmans, Green & Co. in 1867 (copy in Minneapolis Public Library).

An article entitled "Incubator", appearing on pages 1177 and 1178 of Knight's American Mechanical Dictionary, Vol. II, published at Boston, Mass., by Houghton, Mifflin & Company, 1884.

An article entitled "Ventilator", appearing on pages 2704 and 2705 of Knight's American Mechanical Dictionary, Vol. III, published at Boston, Mass., by Houghton, Mifflin & Company, 1884, and particularly the cut (Fig. 6960) appearing on page 2705, entited "Sectional View of the Senate Wing, United States Capital, showing the Pressure and Exhaust Ventilating Apparatus", and the description thereof, which appears on the said page directly below the said cut.

And other publications, now unknown to this defendant, but which, when discovered, he prays leave to add by amendment to this, his Answer in this suit.

XIII.

The defendant, further answering, avers, on information and belief, that, in view of the Patent Office file wrapper record of said Samuel B. Smith's patent, 1,262,860, of April 16, 1918, here in suit, the said Samuel B. Smith, his heirs, legal representatives and assigns, and the Buckeye Incubator Company, its successors and assigns including the plaintiff in this suit, are estopped from receiving any interpretation of the relied upon claims 1 and 2 of said patent in suit, which would accord to said claims, or either thereof, any meaning broad enough in scope to include any methods of hatching eggs ever, anywhere in the United States, carried into effect by any incubator ever made and sold by the defendant in the United States, or ever, anywhere used in the United States, by said defendant, without the authority of the owners of said Smith patent in suit, first had and received.

XIV.

The defendant, further answering, avers, on information and belief, that, in view of the prior art, identified or
17 referred to in paragraph XII of this Answer, it is not possible to give to the relied upon claims 1 and 2 of

the Smith patent, 1,262,860, here in suit, or either thereof, any meaning under which the said claims, or either thereof, could be held to be valid over said prior art, and, at the same time, include and cover any method of hatching eggs, ever, anywhere in the United States, carried in effect by any incubator ever made and sold by the defendant in the United States, or ever, anywhere used by the defendant in the United States without the authority of the owners of said Smith patent in suit, first had and received.

XV.

The defendant, further answering, avers that the said Smith patent in suit, 1,262,860, of April 16, 1918, as to the relied upon claims 1 and 2 thereof, has been adjudicated in the hereinbelow identified cases, and that, in all of said cases, the Bills of Complaint were dismissed, for non-infringement, to-wit:—

Buckeye Incubator Co., et al., vs. Blum, 17 F. R. (2) 456, affirmed by the Circuit Court of Appeals for the Sixth Circuit in a decision rendered July 6, 1928, reported in 27 F. R. (2) 333;

Buckeye Incubator Co. and Samuel B. Smith vs. Ira W. Petersime, et al., in a decision of District Judge Hickenlooper rendered June 30, 1926, (unreported in the Federal Reporter), affirmed by the Circuit Court of Appeals for the Sixth Circuit June 10, 1927, 19 F. R. (2) 721.

Buckeye Incubator Co. et al., vs. Hillpot, 22 F. R. (2) 855, affirmed by the Circuit Court of Appeals for the Third Circuit, in a decision rendered February 10, 1928, reported in 24 F. R. (2) 341.

Buckeye Incubator Co. and Samuel B. Smith vs. Bert W. Boling, trading as the Brownstown Poultry Farm of Brownstown, Indiana, this being Equity Case No. 812, in the United States District Court of the District of Indiana, Indianapolis, Division, which was tried before District Judge Thomas W. Slick in January, 1926, who dismissed the plaintiff's Bill of Complaint by a Decree signed and filed by him February 8, 1926, and which Decree became final (unreported in Federal Reporter); and which case is referred to in the decision of the trial court (Judge Hough) in Boling vs. Buckeye Incubator Co. et al., 33 F. R. (2) 347, and in which decision the structure and operation of the Boling incubator is described. (See pages 350-351.)

18 And said defendant further avers that, in all of said cases carried up to the respective Circuit Court of

Appeals above named, said claims 1 and 2 of said Smith patent in suit were construed to be of very limited scope, in view of the prior art and the file wrapper record of the said Smith patent, 1,262,860; and the defendant further avers, on information and belief, that the meanings accorded to said claims by the said Courts, in said cases, were of such narrow scope that they do not include and cover any method of hatching eggs ever, anywhere in the United States, carried into effect by any incubator ever made and sold by the defendant in the United States, or ever, anywhere used in the United States by said defendant, without the authority of the owners of said Smith patent in suit first had and received.

XVI.

Said defendant, further answering, on information and belief, denies the equity of plaintiff's Bill of Complaint, denies that the plaintiff is entitled to any profit or damages from the defendant, or to any injunction, temporary or permanent, or to any accounting, or to any cost of suit, or to any part of the relief in said Bill of Complaint demanded, or to any relief whatsoever.

All of which statements and defenses this defendant is ready to aver, maintain and prove as this Honorable Court shall direct and, hence, he prays to be dismissed with his reasonable costs and charges in his behalf most wrongfully sustained.

E. H. SNOW,
doing business under the names, "Snow's Hatcheries" and "Snow's Incubator Company", Defendant.

Williamson & Williamson
Counsel for Defendant,
925 Metropolitan Life Bldg.,
Minneapois, Minnesota.

James F. Williamson,
Of Counsel for Defendant.

(Endorsed): Filed Nov. 2, 1931. Joel M. Dickey, Clerk. By Thomas H. Howard, Deputy.

---

19 (Order that Defendants Prepare Further and Better Statement Specifying Patents, etc., upon Which They Will Rely.)

This cause came on for hearing upon an Order directing Defendants to show cause why they should not specify which

of the patents, publications and uses they intend to rely at trial as anticipations of the two claims of the patent in suit.

Upon consideration of the pleadings herein, arguments of counsel for both sides, it is hereby

Ordered that Defendants prepare a further and better statement specifying which of the patents, publications and uses peaded in the Answer, as amended, will be relied upon at trial as anticipations of the two claims in suit, serve a duplicate copy of such statement upon plaintiff's solicitors, and file the original with the Clerk of this Court on or before three o'clock, P. M. of Tuesday, November 8, 1932.

GUNNAR H. NORDBYE,
United States District Judge.

November 5, 1932.

(Endorsed): Filed Nov. 5, 1932. Joel M. Dickey, Clerk. By Thomas H. Howard, Deputy.

---

20 (Notice to Plaintiff of Response of Defendants to Order Directing Them to Prepare Further and Better Statement Specifying Patents, etc.)

Messrs. Paul, Paul & Moore,
700 Security Bldg.,
Minneapolis, Minnesota.

Gentlemen:—

Herewith we submit to your inspection the original of the defendant's response to the Court's order of Nov. 5, 1932, and deliver to you a copy thereof.

Kindly acknowledge service.

WILLIAMSON & WILLIAMSON,
Attorneys for Defendant.

Dated Nov. 7, 1932.

Service of the above notice, the original of the document therein referred to and the receipt of copies of said notice and document is hereby acknowledged this 7th day of November, 1932.

PAUL, PAUL & MOORE.

---

21 (Response of Defendants to Order Directing Them to Prepare Further and Better Statement Specifying Patents, etc., upon Which They Will Rely.)

In response to the order of the Court signed and filed by his Honor, Judge Gunnar H. Nordbye, November 5, 1932, comes now the defendant in the above entitled case, by his attorneys of record, and makes and files the following statement:—

At the trial of this case, the defendant will rely upon the hereinbelow identified record, the hereinbelow identified prior patents, the hereinbelow identified prior publications, and the hereinbelow identified prior uses, to establish the respective defenses for which the same were set up in the defendant's answer to the plaintiff's Bill of Complaint including the defenses of anticipation (for lack of novelty) want of invention over the prior art and non-infringement of the relied upon claims of the Smith patent in suit:—

1. The defendant will rely upon the file wrapper record of the Smith patent No. 1,262,860, of April 16, 1918, in suit, and the prior U. S. and foreign patents which were cited as references on the said file wrapper record and which references are specifically identified in paragraph XII of the defendant's answer under the heading "Group A".

2. Of the twenty-nine prior U. S. Patents set up in paragraph XII of the defendant's answer under the heading "Group B", the defendant will rely upon the thirteen thereof hereinbelow identified to-wit:—

22 3,019, Mar. 30, 1843, Guerin, "Egg Hatching Apparatus",

193,616, July 31, 1877, Renwick, "Incubator",

335,961, Feb. 9, 1886, Renwick, "Incubator",

456,407, July 21, 1891, Frey & Wayne, "Incubator",

535,175, Mar. 5, 1895, Schwartz, Jr., "Method of and Apparatus for ordering tobacco"

553,723, Jan. 28, 1896, Proctor, "Apparatus for Ordering Tobacco",

586,088, July 6, 1897, Jones, "Incubator and Brooder",

992,622, May 16, 1911, Wiebe, "Egg Drier",

1,010,809, Dec. 5, 1911, Schmidt & Schütterle, "Apparatus for Drying Macaroni and Like Bakery Products",

1,075,747, Oct. 14, 1913, Zimmer, "Semifireless Incubator",

360,223, Mar. 29, 1887, Johnson, "Electrical Apparatus for Heating and Cooling Buildings",

426,321, Apr. 22, 1890, Proctor & Knowles, "Drying Machine",

843,909, Feb. 12, 1907, Peters & Hungerford, "Atmosphere Regulating System".

3. Of the publications set up in paragraphs VII, VIII and in XII, under the heading "Group C", the defendant will rely upon those hereinbelow identified, to-wit:

The newspaper article published in the Sunday Plain Dealer, of Cleveland, Ohio, in its issue of Sunday, February 23rd, 1913, entitled "Mammoth Incubator will turn out 20,000 Chicks per week" and

The article published in the Cleveland Leader of Cleveland, Ohio, in its issue of Sunday, February 22nd, 1914, entitled "Cleveland Boasts Largest Hatchery".

An article entitled "Incubator" appearing on pages 652-653 Vol. 2 of Ure's Dictionary of Arts, Manufactures and Mines published in London, England by Longmans, Green and Co., in 1867, (copy in Minneapolis Public Library).

An article entitled "Incubator", appearing on pages 1177 and 1178 of Knight's American Mechanical Dictionary Vol. II, published at Boston, Mass., by Houghton, Mifflin & Company, 1884.

An article entitled "Ventilator", appearing on pages 2704, and 2705 of Knight's American Mechanical Dictionary, Vol. III, published at Boston, Mass., by Houghton, Mifflin & Company, 1884, and particularly the cut (Fig. 6960) appearing on page 2705, entitled "Sectional View of the Senate Wing United States Capitol, showing the Pressure and Exhaust Ventilating Apparatus", and the description thereof, which appears on the said page directly below the said cut.

23 4. Of the prior uses set up in the defendant's answer, the defendant will rely on the prior usage by Samuel B. Smith, himself, set up in paragraph VII of the defendant's answer.

Signed at Minneapolis, Minnesota, this 7th day of November, 1932.

WILLIAMSON & WILLIAMSON,
Attorneys for Defendant.

(Endorsed): Filed Nov. 7, 1932, Joel M. Dickey, Clerk. By Thomas H. Howard, Deputy.

---

24 (Stipulation as to Introduction of Uncertified Copies of Letters Patents, etc.)

It is hereby stipulated that on the trial of the above entitled case the following things may be done:—

1. In case the parties to said suit, or either thereof, shall desire to introduce into evidence any U. S. or foreign patents set up in the Defendant's answer to the Plaintiff's Bill of Complaint, and in the Defendant's response to the Court's order of November 5th, 1932, then the official printed copies of said U. S. patents, uncertified, and the official copies of any foreign patents procured from the U. S. Patent Office, certified, may be introduced and used in evidence with the same force and effect as if certified copies had been procured from the respective Patent Offices or the departments of government issuing said patents had been procured and introduced into evidence.

2. As to all publications set up in the Defendant's answer to the Plaintiff's Bill of Complaint in said suit, and also in the Defendant's response to the Court's order of November 5th, 1932, that uncertified photostatic copies of the articles appearing therein and identified in said answer and response may be offered and used in evidence with the same force and effect as if the original publications had been produced and identified and authenticated by competent witnesses.

3. Defendant admits title to the patent in suit in the plaintiff Samuel B. Smith.

Signed at Minneapolis, Minnesota, this 14th day of November, 1932.

A. L. ELY,
Counsel for Plaintiff.

WILLIAMSON & WILLIAMSON,
Counsel for Defendants.

(Endorsed): Filed Nov. 16, 1932, Joel M. Dickey, Clerk. By Thomas H. Howard, Deputy.

---

973 (Opinion of District Court.)

The above entitled action came on for trial and was duly tried to the Court at the Federal Building in Minneapolis, Minnesota, commencing on November 16, 1932.

Albert L. Ely, Esq., of Cleveland, Ohio, and Messrs. Paul, Paul and Moore, represented by Harold Olson, Esq., appeared on behalf of the plaintiff;

Messrs. Williamson & Williamson, represented by James F. Williamson, Esq., and Ralph E. Williamson, Esq., appeared on behalf of the defendants.

After duly considering all of the files and records herein, the evidence adduced at the trial, the arguments of counsel and the briefs of counsel, I find and hold as Conclusions of Law, Findings of Fact and Mixed Law and Fact as follows:

1. That the plaintiff, Samuel B. Smith, was at he time of the commencement of this action and still is a citizen of the United States and a resident of Cleveland, Ohio.

2. That the defendant, E. H. Snow, did at the time of the commencement of this action and still does reside at Sleepy Eye, Brown County, Minnesota, and that E. H. Snow
974 doing business as Snow's Hatcheries and Snow's Incubator Company, was, at the time of the commencement of this action and still is located at Sleepy Eye, Brown County, Minnesota, where the defendants are engaged in and doing business in the commercial hatching of eggs.

3. This suit is one arising under the patent laws of the United States and this Court has jurisdiction thereof.

4. On October 26, 1916, the plaintiff, Samuel B. Smith, filed in the United States patent office an application for letters patent of the United States for said improvement.

5. That prior to April 16, 1918, Samuel B. Smith assigned the right, title and interest in and to said invention and in and to any United States patent to issue thereon to The Buckeye Incubator Company, a corporation of Ohio, and that after due proceedings upon said application for patent there was issued to The Buckeye Incubator Company, aforesaid, United States Letters Patent No. 1,262,860 on April 16, 1918, whereby the exclusive right of making, using and selling the said invention and improvements throughout the United States for the term of said patent was granted to The Buckeye Incubator Company, aforesaid, its successors or assigns.

6. That under date of April 29, 1927, The Buckeye Incubator Company, aforesaid, being then the owner of the title in and to the aforesaid Letters Patent, did sell, assign and transfer to the plaintiff, Samuel B. Smith, his heirs and assigns, the right, title and interest in and to the said Letters Patent.

7. That the plaintiff and his predecessor in title, The
975 Buckeye Incubator Company, have been at all times the sole and exclusive owners of said patent.

8. That incubators manufactured and sold by the plaintiff have been marked "Patented" with the date and number of the patent aforesaid, as required by the Statutes of the United States, and that in addition the defendants herein were, before the commencement of this suit, duly notified in writing of the patent aforesaid and of their infringement thereof.

9. That the defendants prior to and not more than six years before the filing of the bill of complaint herein, have manufactured, sold and offered for sale to others and are using in the hatching of eggs at their place of business at Sleepy Eye, Minnesota, and other locations in Minnesota, incubators embodying and operating in accordance with the invention of said patent No. 1,262,860, and are threatening to continue the manufacture, sale and use of such incubators, thereby infringing the rights of the plaintiff as secured by the said patent, all without the license or consent of the plaintiff.

10. That by reason of the infringement complained of herein the plaintiff has suffered and is suffering loss and damage and the defendants have realized profits and gains which of right belong to the plaintiff.

11. The Smith patent 1,262,860 is not anticipated by any of the defenses and is valid, particularly as to claims 1 and 2 thereof.

12. The Smith patent is for a process of hatching eggs combining the steps of staged-incubation and forced-draft. These two steps have never been combined prior to two years before the filing of the Smith patent.

976 13. The Smith prior use and the publications thereof do not anticipate, as they do not disclose staged incubation.

14. Claims 1 and 2 of the patent cover the process of applying a forced draft to eggs in various stages of incubation located at different levels in a room which is closed except for small openings for the escape of limited amounts of foul and intake of corresponding amounts of fresh air.

15. Claims 1 and 2 of the patent are not limited in their terms or by the proceedings in the Patent Office to the setting of the eggs which are in various stages of incubation in any order or sequence, nor to the shifting of eggs during the

process, but on the contrary are of sufficient breadth to cover any arrangement of eggs in various stages of incubation.

16. The defendant in the incubator known as Plaintiff's Exs. 12 to 12KK and Defendant's Ex. F sets eggs in various stages of incubation.

17. Claims 1 and 2 of the Smith patent require the circulation of air through the eggs in current form by mechanical means such as fans or their equivalents, but the direction of the current is not essential.

18. The defendant, in the incubators identified in Finding 16 hereof circulates the air through the eggs in current form by mechanical means such as fans or their equivalents.

19. The Smith patent shows and describes a process in which the air moves in current form in repeated cycles over the eggs so that moisture is conserved, and the temperature is maintained substantially the same throughout the chamber by the carrying of the heat units from eggs
977 in later stages of incubation to eggs in earlier stages of incubation.

20. The Snow machines, identified in Finding 16 hereof, use a process in which the air moves and functions in the manner described in Finding 19 hereof.

21. Claim 1 is not limited in terms or by the proceedings in the Patent Office to the use of details of the apparatus such as the curtains, nor to the particular size, speed, location or arrangement of the fans shown in the patent.

22. Claim 1 is of sufficient breadth to cover a process in which the current movement of the air in defined paths is secured by mechanical means such as fans.

23. The defendant, in the machines identified in Finding 16 hereof, employes a process in which the current movement of the air in defined paths is secured by mechanical means such as fans.

24. The defendant, in the incubators identified in Finding 16 hereof, has infringed upon claim 1 of the patent.

25. Claim 2 of the Smith patent differs from claim 1 only in the inclusion of a "power driven" current of air; and in specifying that that current of air shall pass from an adjacent chamber through openings into the egg chamber.

26. The Snow incubators as specified in Finding 16 hereof use a "power driven" current and that current is created

in the chamber at the rear of the egg racks and passes through openings provided therefor around the egg racks and thence enters the egg racks.

27. The Snow incubators as specified in Finding 16
978 hereof infringe upon claim 2 of the Smith patent.

28. That a decree shall be entered finding the patent in suit unanticipated and valid and claims 1 and 2 thereof infringed; an injunction shall be issued forbidding the continued use by the defendant of the machines similar to those identified in Finding 16 hereof, or of any machines embodying the invention of the patent in suit and either claims 1 or 2 thereof; and the defendant shall be required to account for all gains and profits which he shall have made by the use of those machines or any machines embodying the Smith invention.

Dated this 7th day of February, 1933.

JOSEPH W. MOLYNEAUX,
United States District Judge.

(Endorsed): Filed Feb. 7, 1933, Joel M. Dickey, Clerk, By Thomas H. Howard, Deputy.

---

979 (Interlocutory Decree, February 11, 1933.)

In the United States District Court, District of Minnesota, Fourth Division.

Samuel B. Smith, Plaintiff,
No. 2119. vs. Equity.
E. H. Snow and D. H. Snow, d. b. a. Snow's Hatcheries and Snow's Incubator Company, Defendant.

This cause came on for trial before the Court at this term on November 16, 1932, and after duly considering all of the files and records herein, the evidence adduced at the trial, the arguments of counsel and the briefs of counsel, It Is

Ordered, Adjudged And Decreed as follows:—

1. That the Letters Patent of the United States, granted to Samuel B. Smith on Incubators, No. 1,262,860, dated April 16, 1918, being the Letters Patent in suit, are good and valid in law, as to claims 1 and 2 thereof.

2. That the plaintiff, Samuel B. Smith, is the sole and exclusive owner of the entire right, title and interest in and to said Letters Patent No. 1,262,860.

3. That the defendants, E. H. Snow and E. H. Snow, d. b. a. Snow's Hatcheries and Snow's Incubator Company, have infringed said claims 1 and 2 of said Smith's Letters Patent in suit, No. 1,262,860, of April 16, 1918, and have violated the exclusive rights of the plaintiff thereunder, by the hatching of eggs within the jurisdiction of this Court, in accordance with the methods of hatching eggs, disclosed in said patent and defined in claims 1 and 2 thereof.

4. That a writ of injunction issue out of and under the seal of this Court, directed to the said defendants, E. H. Snow and E. H. Snow, d. b. a. Snow's Hatcheries and Snow's Incubator Company, enjoining and restraining the
980 said defendants, and each of them, their officers, directors, associates, attorneys, clerks, servants, agents, workmen, employees, and confederates, and each of them, throughout the remainder of the life of said Smith patent in suit, No. 1,262,860, of April 16, 1918, and throughout the life of any extension thereof, which may hereafter be granted, from using, or causing to be used, for hatching eggs within the United States, any machine of the structure exemplified in the defendants' machine-Exhibit F, or illustrated in the plaintiff's drawings, Exhibits 12 to 12-KK, inclusive, and from directly or indirectly infringing, or causing to be infringed, said claims 1 and 2 of said Smith patent in suit, or either thereof.

5. That the plaintiff recover from the defendants the profits, gains and advantages, which the said defendants have received, or which may have accrued to them by reason of their said infringement of claims 1 and 2 of said Smith patent in suit, No. 1,262,860, of April 16, 1918.

6. That this cause be referred to Howard S. Abbott, Esq. as Special Master of this Court, who is hereby appointed to ascertain, state and report to the Court a true and correct account of the extent of the infringement by said defendants, or any thereof, of said claims 1 and 2 of said Smith patent in suit, No. 1,262,860, of April 16, 1918, and also the amount of the gains, profits and advantages, which said defendants have received from the said infringement of claims 1 and 2 of said patent, and the amount of the damages, which said plaintiff has suffered, if any, by reason of said defendants' infringement of said claims 1 and 2 of said patent; and the plaintiff, on said accounting, shall have the right to cause examination of the officers, servants, agents and employees of the defendants, ore tenus, or otherwise, and also to examine other witnesses and to cause production and examination of the books, vouchers and documents

of said defendants, and to have all necessary process of the Court to compel such attendance and production before the said Master, at such times, and places, as he shall, from time to time, direct.

981 7. That the plaintiff recover from the said defendants the taxable costs of the plaintiff in this Court and that the plaintiff shall have judgment and execution against the said defendants for said costs.

Dated at Minneapolis, Minnesota, this 11th day of February, 1933.

JOSEPH W. MOLYNEAUX,
U. S. District Judge.

Approved as to Form:

Williamson & Williamson,
Attorneys for Defendants.

Paul, Paul & Moore,
Attorneys for Plaintiff.

(Endorsed): Filed Feb. 11, 1933, Joel M. Dickey, Clerk, By Thomas H. Howard, Deputy.

---

982 Petition for Appeal and Supersedeas Order.

To the Honorable Joseph W. Molyneaux, District Judge:—

The above named defendants, to-wit: E. H. Snow and E. H. Snow, d. b. a. Snow's Hatcheries and Snow's Incubator Company, considering themselves aggrieved by the Decree rendered and entered in the above entitled cause, on the 11th day of February, A. D., 1933, do hereby appeal from said Decree to the United States Circuit Court of Appeals for the Eighth Circuit, for the reasons set forth in the Assignments of Error to be filed herewith, and they pray that their appeal be allowed and that citation be issued, as provided by law, and that a transcript of the record, proceedings and documents upon which said Decree was based, duly authenticated, be sent to the United States Circuit Court of Appeals for the Eighth Circuit, under and in accordance with the rules of said Court in such cases made and provided.

And your Petitioners further pray that the allowance of said appeal be ordered to operate as a supersedeas, upon the defendants executing and filing with the Clerk of the Court, within 10 days from the date hereof, a bond in the

sum of Ten Thousand Dollars, as provided by law,
983 and that the Clerk be directed and ordered to stay the mandate of the District Court for the issue of an injunction and for an accounting, and for the taxation of costs, until the further order of this Court.

Signed at Minneapolis, Minnesota, this 16 day of February, A. D. 1933.

E. H. SNOW and
E. H. SNOW,
d. b. a. Snow's Hatcheries and
Snow's Incubator Company,
By Williamson & Williamson,
Their Attorneys of Record.

Order Allowing Appeal and Supersedeas.

It Is Hereby Ordered, This 16 day of February, 1933:— That the foregoing appeal be, and is hereby allowed, and that this allowance shall operate as a supersedeas upon the said Appellants filing their assignments of error and executing and filing with the Clerk of this Court, within 10 days from the date hereof, a bond in the sum of Ten Thousand Dollars, as provided by law; and it is hereby further ordered, that said allowance of said appeal shall operate as a supersedeas, and the Clerk is hereby ordered and directed to stay the mandate of the District Court for the issue of an injunction and for an accounting and the taxation of costs until the further order of this court.

JOSEPH W. MOLYNEAUX (Signed)
District Judge.

(Endorsed): Filed Feb. 16, 1933. Joel M. Dickey, Clerk. By Thomas H. Howard, Deputy.

---

984 Bond on Appeal.

Know All Men By These Presents, That we, E. H. Snow and E. H. Snow, d. b. a. Snow's Hatcheries and Snow's Incubator Company, as Principal, and ..... as Sureties, are held and firmly bound unto Samuel B. Smith, the plaintiff, appellee in the above suit, in the sum of Ten Thousand Dollars, lawful money of the United States, to be paid the said Samuel B. Smith, his respective executors, administrators and successors; to which payment well and truly to be made, we bind ourselves, and each of us, jointly and

severally, and each of our heirs, executors and administrators by these Presents.

Sealed with our seals and dated this 20th day of February, 1933.

Whereas, the above named E. H. Snow and E. H. Snow, d. b. a. Snow's Hatcheries and Snow's Incubator Company, the defendant, appellant, has prosecuted an appeal to the United States Circuit Court of Appeals for the Eighth Circuit, to reverse the decree of the United States District Court, for the District of Minnesota, Fourth Division, rendered in the above entitled suit, on the 11th day of February, 1933;

Now, Therefore, the condition of this obligation is such, that if the above named E. H. Snow and E. H. Snow, d. b. a. Snow's Hatcheries and Snow's Incubator Company,
985 shall prosecute their said appeal to effect and answer all damages and costs, if they fail to make good their plea, then this obligation shall be void; otherwise to remain in full force and effect.

E. H. SNOW,
E. H. SNOW,
Doing business as Snow's Hatcheries and Snow's Incubator Company.

SEABOARD SURETY COMPANY,
By David R. Arundel,
Its Attorney-in-Fact.

(Corporate Seal)

State of Minnesota,
County of Hennepin—ss.

On the 20th day of February, 1933, personally appeared before me E. H. Snow, of Sleepy Eye, Minnesota, known to me to be the person described in and who duly executed the foregoing instrument as the Principal thereto, and acknowledged that he executed the same as his free act and deed for the purposes therein set forth.

ERIC A. MONROE.

Subscribed and sworn to before me this 20th day of February, 1933.

ERIC A. MONROE,
Notary Public, Hennepin County, Minnesota.

(Notarial Seal)

My commission expires July 15, 1933.

State of Minnesota,
County of Hennepin—ss:

On this 20th day of February, 1933, before me personally appeared David R. Arundel, with whom I am personally acquainted, who, being by me duly sworn, said; that he resides in the City of Minneapolis, County of Hennepin; that he is the Attorney-in-Fact of the Seaboard Surety Company, the corporation described in and which executed the foregoing instrument; that he knows the corporate seal of the said Company; that the seal affixed to said instrument is such corporate seal; that said instrument was executed in behalf of said corporation by authority of its Board of Directors and that he signed his name thereto as Attorney-in-Fact by like authority; and said David R. Arundel acknowledges said instrument to be the free act and deed of said Company, and that the liabilities of the said Company do not exceed its assets, as ascertained in the manner provided in Chapter 33, of the Laws of 1909 constituting Chapter 28 of the Consolidated Laws of the State of New York, and known as the Insurance law.

JANET L. OLSON,
(Notarial Seal) Notary Public, Hennepin County, Minn.
My commission expires 1/16/38

The above bond is hereby approved, both as to sufficiency and to form, this 21st day of February, 1933.

JOSEPH W. MOLYNEAUX,
District Judge.

(Endorsed): Filed Feb. 21, 1933. Joel M. Dickey, Clerk. By Thomas H. Howard, Deputy.

---

986 Assignment of Errors.

Now come E. H. Snow and E. H. Snow, d. b. a. Snow's Hatcheries and Snow's Incubator Company, the defendants in the above entitled cause, and file the following assignments of errors, upon which they will rely upon the prosecution of their appeal herein from the decree signed and filed by this Honorable Court February 11, 1933:—

I.

The Court erred in decreeing the Samuel B. Smith U. S. Letters Patent No. 1,262,860, of April 16, 1918, in suit, to be good and valid in law, as to claims 1 and 2 thereof.

II.

The Court erred in not decreeing said Samuel B. Smith's U. S. Letters Patent No. 1,262,860, of April 16, 1918, in suit, to be invalid in law, as to claims 1 and 2 thereof, for lack of novelty and want of invention over the proven prior art.

III.

The Court erred in decreeing that the defendants had infringed said claims 1 and 2 of the said Samuel B. Smith's U. S. Letters Patent, No. 1,262,860, of April 16, 1918, in suit.

IV.

The Court erred in not decreeing that the defendants had not infringed said claims 1 and 2 of said Samuel B. Smith's U. S. Letters Patent No. 1,262,860, of April 16, 1918, in suit.

V.

The Court erred in decreeing that a writ of injunction should be issued out of and under the seal of the Court,
987 restraining and enjoining the defendants, and each thereof, as provided in paragraph 4 of the Decree.

VI.

The Court erred in decreeing that the plaintiff should recover from the defendants the profits, gains and advantages, which the said defendants had received, or which may have accrued to said defendants from the acts of the defendants referred to in paragraph 5 of the Decree.

VII.

The Court erred in decreeing that the cause be referred to a Special Master of the Court, for an accounting of profits and damages, accrued or accruing to the plaintiff from the defendants' acts, as stated in paragraph 6 of the Decree.

VIII.

The Court erred in decreeing that the plaintiff should recover from the defendants the taxable costs of the plaintiff in that Court, and that the plaintiff should have judgment and execution against the said defendants for said costs.

IX.

The Court erred in its finding numbered 9; and which finding reads as follows:—

"9. That the defendants prior to and not more than six years before the filing of the bill of complaint herein, have

manufactured, sold and offered for sale to others and are using in the hatching of eggs at their place of business at Sleepy Eye, Minnesota, and other locations in Minnesota, incubators embodying and operating in accordance with the invention of said patent No. 1,262,860, and are threatening to continue the manufacture, sale and use of such incubators, thereby infringing the rights of the plaintiff as secured by the said patent, all without the license or consent of the plaintiff."

X.

The Court erred in its finding numbered 10; and which finding reads as follows:—

"10. That by reason of the infringement complained of herein the plaintiff has suffered and is suffering loss
988 and damage and the defendants have realized profits and gains which of right belong to the plaintiff."

XI.

The Court erred in its finding numbered 11; and which finding reads as follows:

"11. The Smith patent 1,262,860, is not anticipated by any of the defenses and is valid, particularly as to claims 1 and 2 thereof".

XII.

The Court erred in its finding numbered 12; and which finding reads as follows:

"12. The Smith patent is for a process of hatching eggs combining the steps of staged-incubation and forced-draft. These two steps have never been combined prior to two years before the filing of the Smith patent".

XIII.

The Court erred in its finding numbered 13; and which finding reads as follows:

"13. The Smith prior use and the publications thereof do not anticipate, as they do not disclose staged incubation".

XIV.

The Court erred in its finding numbered 14; and which finding reads as follows:

"14. Claims 1 and 2 of the patent cover the process of applying a forced draft to eggs in various stages of incubation located at different levels in a room which is closed ex-

cept for small openings for the escape of limited amounts of foul and the intake of corresponding amounts of fresh air."

XV.

The Court erred in its finding numbered 15; and which finding reads as follows:

"15. Claims 1 and 2 of the patent are not limited in their terms or by the proceedings in the Patent Office to the setting of the eggs which are in various stages of incubation in any order or sequence, nor to the shifting of eggs during the process, but on the contrary are of sufficient breadth to cover any arrangement of eggs in various stages of incubation."

XVI.

The Court erred in its finding numbered 16; and which finding reads as follows:

"16. The defendant in the incubator known as Plaintiff's Exs. 12 to 12KK and Defendant's Ex. F sets eggs in various stages of incubation".

989

XVII.

The Court erred in its finding numbered 17; and which finding reads as follows:

"17. Claims 1 and 2 of the Smith patent require the circulation of air through the eggs in current form by mechanical means such as fans or their equivalents, but the direction of the current is not essential".

XVIII.

The Court erred in its finding numbered 18; and which finding reads as follows:

"18. The defendant, in the incubators identified in Finding 16 hereof, circulates the air through the eggs in current form by mechanical means such as fans or their equivalents."

XIX.

The Court erred in its finding numbered 19; and which finding reads as follows:

"19. The Smith patent shows and describes a process in which the air moves in current form in repeated cycles over the eggs so that moisture is conserved, and the temperature is maintained substantially the same throughout the chamber by the carrying of the heat units from eggs in later stages of incubation to eggs in earlier stages of incubation."

XX.

The Court erred in its finding numbered 20; and which finding reads as follows:

"20. The Snow machines, identified in Finding 16 hereof, use a process in which the air moves and functions in the manner described in finding 19 hereof."

XXI.

The Court erred in its finding numbered 21; and which finding reads as follows:

"21. Claim 1 is not limited in terms or by the proceedings in the Patent Office to the use of details of the apparatus such as the curtains, nor to the particular size, speed, location or arrangement of the fans shown in the patent".

XXII.

The Court erred in its finding numbered 22; and which finding reads as follows:

"22. Claim 1 is of sufficient breadth to cover a process in which the current movement of the air in defined paths is secured by mechanical means such as fans."

990 XXIII.

The Court erred in its finding numbered 23; and which finding reads as follows:

"23. The defendant, in the machines identified in Finding 16 hereof, employs a process in which the current movement of the air in defined paths is secured by mechanical means such as fans."

XXIV.

The Court erred in its finding numbered 24; and which finding reads as follows:

"24. The defendant, in the incubators identified in Finding 16 hereof, has infringed upon claim 1 of the patent".

XXV.

The Court erred in its finding numbered 25; and which finding reads as follows:

"25. Claim 2 of the Smith Patent differs from claim 1 only in the inclusion of a 'power driven' current of air; and

in specifying that that current of air shall pass from an adjacent chamber through openings into the egg chamber".

XXVI.

The Court erred in its finding numbered 26; and which finding reads as follows:

"26. The Snow incubators as specified in Finding 16 hereof use a 'power driven' current and that current is created in the chamber at the rear of the egg racks and passes through openings provided therefor around the egg racks and thence enters the egg racks."

XXVII.

The Court erred in its finding numbered 27; and which finding reads as follows:

"27. The Snow incubators as specified in Finding 16 hereof infringe upon claim 2 of the Smith patent."

XXVIII.

The Court erred in its finding numbered 28; and which finding reads as follows:

"28. That a decree shall be entered finding the patent in suit unanticipated and valid and claims 1 and 2 thereof infringed; an injuncton shall be issued forbidding the continued use by the defendant of the machines similar to those identified in Finding 16 hereof, or of any machines embodying the invention of the patent in suit and either claims 1 or 2 thereof; and the defendant shall be required to account for all gains and profits which he shall have made by the use of those machines or any machines embodying the Smith invention."

991

XXIX.

The Court erred by not making, in its decision, the following finding, to-wit:

"1. That prior patents and publications disclose the fact that stage incubation was old and public property before Smith entered the field."

XXX.

The Court erred by not making, in its decision, the following finding, to-wit:

"2. The Smith prior public usage, at Cleveland, Ohio, during the years 1913 and 1914, was a commercial usage,

which barred the plaintiff from securing a valid claim in his patent 1,262,860, to cover the method of air circulation there used at that time."

XXXI.

The Court erred by not making, in its decision, the following finding, to-wit:

"3. The method of air circulation publicly used by Dr. Smith, at Cleveland, Ohio, during the years 1913 and 1914, was the same as the method of air circulation in the present Smith commercial machine with the curtains removed."

XXXII.

The Court erred by not making, in its decision, the following finding, to-wit:

"4. The Smith public commercial usage, at Cleveland, Ohio, during the years 1913 and 1914, bars the plaintiff from asserting that increasing the volume and velocity of air travel in an incubator beyond the volume and velocity of the air travel in the Smith commercial machine, is the mechanical equivalent of curtains, disclosed in the Smith patent."

XXXIII.

The Court erred by not making, in its decision, the following finding, to-wit:

"5. The Smith prior public usage, at Cleveland, Ohio, during the years 1913 and 1914, bars an interpretation of claim 1 of the Smith patent in suit to cover every process in which the current movement of the air in defined paths is secured by mechanical means, such as fans."

XXXIV.

The Court erred by not making, in its decision, the following finding, to-wit:

"6. The methods, defined in the relied on claims 1 and 2 of the Smith patent in suit, cannot be carried out in a machine wherein the air current is not confined by use of curtains or equivalent partitions".

992 XXXV.

The Court erred by not making, in its decision, the following finding, to-wit:

"7. In view of the file wrapper estoppels, imposed upon the Smith patent in suit, and the prior uses, patents and pub-

lications, claims 1 and 2 of the Smith patent are not open to a broad interpretation to cover any hatching process, including merely stage incubation and forced draft air circulation".

XXXVI.

The Court erred in not making, in its decision, the following finding, to-wit:

"8. The defendant does not utilize a hatching method including applying a current of air to move in a column through the corridor of this machine, or applying a current of air to move in columns through his egg trays."

XXXVII.

The Court erred by not making, in its decision, the following finding, to-wit:

"9. The relied on claims 1 and 2 of the Smith patent in suit are restricted to cover a method of hatching, which, among other things, consists in applying a current of heated air to move in columns through egg trays."

XXXVIII.

The Court erred by not making, in its decision, the following finding, to-wit:

"10. The relied on claims 1 and 2 of the Smith patent in suit are restricted to cover only a method of hatching, which, among other things, consists in applying a current of heated air and confining the movement of said current to a columnar movement by use of curtains or equivalent partitions".

XXXIX.

The Court erred by not making, in its decision, the following finding, to-wit:

"11. The relied on claims 1 and 2 of the Smith patent in suit are limited to a particular hatching method, which among other things, consists in applying a current of heated air created by means other than variations of temperature and moving the said current from said current creating means, first, to eggs in the more advanced stage of incubation, and thence, to eggs in the less advanced stage of incubation."

XL.

The Court erred by not making in its decision, the following finding, to-wit:

993 "12. In the defendant's hatching method, the hot air is not moved by the air forcing means, first to the eggs in the more advanced stage of incubation, and thence to the eggs in the less advanced stage of incubation, within the meaning of the relied on claims 1 and 2 of the Smith patent."

XLI.

The Court erred by not making, in its decision, the following finding, to-wit:

"13. The defendant does not utilize a hatching method, including applying a current of heated air within the meaning of claims 1 and 2 of the Smith patent in suit."

XLII.

The Court erred by not making, in its decision, the following finding, to-wit:

"14. Defendant does not apply a current of heated air within the meaning of the claims in suit, but, on the contrary, employs a general agitation, churning or diffusion of the enclosed air, without creating any general current or defined path of travel."

XLIII.

The Court erred by not making, in its decision, the following finding, to-wit:

"15. Claim 2 of the Smith patent in suit is limited to a current of air that passes from an adjacent chamber through openings into the egg chamber. Defendant does not have an 'adjacent chamber' within the meaning of the claim, and, therefore, does not infringe the claim."

XLIV.

The Court erred by not making, in its decision, the following finding, to-wit:

"16. The relied upon claims 1 and 2 of the Smith patent, 1,262,860, must be so narrowly construed, if held valid over the prior act, including Smith's prior commercial usage, and the file wrapper record of the patent, that they do not cover the defendant's method of hatching eggs."

XLV.

The Court erred by not making, in its decision, the following finding, to-wit:

"17. The defendant has not infringed either claim 1 or claim 2 of the Smith patent, 1,262,860."

XLVI.

The Court erred by not making, in its decision, the following finding, to-wit:

994 "18. Claim 1 and claim 2 of the Smith patent, 1,262,860, are invalid for lack of invention and want of novelty in view of the prior art."

XLVII.

The Court erred by not making, in its decision, the following finding, to-wit:—

"19. That a decree shall be entered dismissing the complainant's bill of complaint and assessing the defendant's costs against the complainant."

Note—The findings forming the basis for the foregoing assignments of errors, numbered XXIX to XLVII, inclusive, were suggested to the Court on behalf of the defendants in the Appendices of defendants' printed briefs in accordance with the Court's request made near the close of the trial and appearing on page 801 of the typewritten record.

XLVIII.

The Court erred by not making, in its decision, a finding to the effect that the file wrapper record of the Samuel B. Smith patent, 1,262,860, of April 16, 1918, in suit, conclusively shows that said Samuel B. Smith repeatedly presented in his said application for said patent successive sets of broad claims, some of which, if allowed, would have covered and included any method of hatching eggs, wherein the two steps of staged incubation and forced draft were employed, and further shows that all such claims, calling broadly for those two steps of staged incubation and forced draft, were rejected by the Commissioner of Patents, on references cited, and further shows that thereafter the said rejected claims were eliminated by the said applicant, Samuel B. Smith, and also shows that the said applicant later presented other method claims of much narrower scope than the eliminated claims, and two of which last referred to narrower claims matured into the relied upon claims 1 and 2 of the said Samuel B. Smith patent here in suit.

XLIX.

The Court erred by not making, in its decision, a finding to the effect that, because of the said conduct of said
995 Samuel B. Smith in the prosecution of his application, which matured into his said patent, 1,-

262,860, here in suit, identified in the foregoing assignment of error, numbered XLVIII, the said Samuel B. Smith, his heirs, legal representatives and assigns, were and are estopped from receiving any interpretation of the relied upon claims 1 and 2 of his said patent here in suit broad enough to cover and include any method of hatching eggs, wherein there is combined simply the two steps of staged incubation and forced draft.

L.

The Court erred by not making, in its decision, a finding to the effect that if the relied upon claims 1 and 2 of the Smith patent, 1,262,860, of April 16, 1918, in suit, are to be held valid, they must be so construed as to differentiate from the estoppels arising from the file wrapper record of the said Smith patent, in suit, referred to in the foregoing assignments of errors numbered XLVIII and XLIX and must also be so construed as to differentiate from the prior art, including the method of hatching eggs proven to have been employed by said Samuel B. Smith, at Cleveland, Ohio, throughout the years 1913 and 1914, at dates over two years before he filed his application for his patent here in suit.

LI.

The Court erred in not making, in its decision, a finding to the effect that, when said relied upon claims 1 and 2 of the Smith patent 1,262,860, of April 16, 1918, are construed, as stated to be required in the foregoing assignment of error numbered L, they cannot be held to cover and include the defendants' method of hatching eggs.

LII.

The Court erred in not making, in its decision, a finding to the effect that said relied upon claims 1 and 2 of the Samuel B. Smith patent 1,262,860, of April 16, 1918, in suit, must be construed to have the limited meanings and limited scope accorded thereto in the prior adjudication of this same Smith patent by the trial court and the Cir-
996 cuit Court of Appeals for the Sixth Circuit in what is known on this record as the "Petersime Case", and the full title of which case is "Buckeye Incubator Co. et al vs. R. M. Petersime", decided by the trial court, Judge Hickenlooper, in an oral decision dated June 30, 1926, and a typewritten memorandum of which was approved by said Judge September 17, 1926, (unreported) and which decision was affirmed by the said Circuit Court of Appeals for the Sixth Circuit in a decision rendered June 10, 1927, and re-

ported in 19 F. R. (2nd) 721; and in which case the plaintiff's bill of complaint was dismissed for non-infringement.

LIII.

The Court erred in not giving to said relied upon claims 1 and 2 of the Samuel B. Smith patent, 1,262,860, of April 16, 1918, in suit, the same limited meanings as was accorded thereto by the said trial court and the said Circuit Court of Appeals for the Sixth Circuit in the said Petersime Case, identified in the foregoing assignment of error numbered LII.

LIV.

The Court erred in not making, in its decision, a finding to the effect that said relied upon claims 1 and 2 of the Samuel B. Smith patent, 1,262,860, of April 16, 1918, in suit, must be construed to have the limited meanings and the limited scope accorded thereto in the prior adjudication of this same Smith patent by the trial court and the Circuit Court of Appeals for the Sixth Circuit in the case known on this record as the "Blum Case", and the full title of which is "Buckeye Incubator Co. et al vs. Blum," wherein the trial court's decision was rendered of date February 14, 1927, and was reported in 17 F. R. (2nd) 456, and wherein the decision of the Circuit Court of Appeals for the Sixth Circuit, affirming the trial court, was rendered July 6, 1928, and was reported in 27 F. R. (2nd) 333; and in which case the plaintiff's bill of complaint was dismissed for non-infringement.

997

LV.

The Court erred in not giving to said relied upon claims 1 and 2 of the Samuel B. Smith patent, 1,262,860, of April 16, 1918, in suit, the same limited meanings as were accorded thereto by the said trial court and the said Circuit Court of Appeals for the Sixth Circuit in the said Blum Case, identified in the foregoing assignment of error numbered LIV.

LVI.

The Court erred in not making, in its decision, a finding to the effect that said relied upon claims 1 and 2 of the Samuel B. Smith patent, 1,262,860, of April 16, 1918, in suit, must be construed to have the limited meanings and limited scope accorded thereto in the prior adjudication of this same Smith patent by the trial court and the Circuit Court of Appeals for the Third Circuit, in the case known on this record as the "Hillpot Case", and the full title of which is

"Buckeye Incubator Co. et al vs. Hillpot", in the trial court, wherein the decision was rendered August 4, 1927, and is reported in 22 F. R. (2d) 855, and the full title of which in the Circuit Court of Appeals was "Buckeye Incubator Co. et al vs. Hillpot" and "Hillpot vs. Buckeye Incubator Co. et al", wherein the decision was rendered February 10, 1928, and was reported in 24 F. R. (2nd) 341; and in which case the plaintiff's bill of complaint was dismissed for non-infringement.

LVII.

The Court erred in not giving to said relied upon claims 1 and 2 of the Samuel B. Smith patent, 1,262,860, of April 16, 1918, in suit, the same limited meanings as were accorded thereto by the said trial court and the said Circuit Court of Appeals for the Third Circuit, in the said Hillpot Case, more fully identified in the foregoing assignment of error LVI.

LVIII.

The Court erred in that it did not grant the relief prayed for in the answer of the defendants.

998 Wherefore, the defendants-appellants pray that said Decree be reversed and that said District Court, for the District of Minnesota, Fourth Division, be ordered to enter a decree reversing the decision of the lower court in said cause.

Dated at Minneapolis, Minnesota, this 18 day of February, 1933.

E. H. SNOW AND E. H. SNOW, d. b. a.
SNOW'S HATCHERIES AND
SNOW'S INCUBATOR COMPANY,
Defendants-Appellants.

By their Attorneys,
WILLIAMSON & WILLIAMSON,
925 Metropolitan Life Building,
Minneapolis, Minnesota.

Service of the above Assignments of Errors and receipt of a copy thereof is hereby admitted this 18th day of February, 1933.

PAUL, PAUL & MOORE,
Attorneys for Plaintiff-Appellee.

(Endorsed): Filed Feb. 18-1933, Joel M. Dickey, Clerk, By Thomas H. Howard, Deputy.

999 Citation on Appeal.

In the United States District Court, District of Minnesota, Fourth Division.

Samuel B. Smith, Plaintiff,
No. 2119. vs. Equity.
E. H. Snow and E. H. Snow, d. b. a. Snow's Hatcheries and Snow's Incubator Company, Defendant.

By the Honorable Joseph W. Molyneaux, one of the Judges of the United States District Court for the District of Minnesota, Fourth Division.

To The Plaintiff and Appellee, Samuel B. Smith, care of his Attorneys of record, Messrs. Paul, Paul & Moore, 700 Security Building, Minneapolis, Minnesota—Greeting:—

Within forty (40) days from the date hereof, you are hereby cited and admonished to be and appear in the United States Circuit Court of Appeals for the Eighth Circuit, at St. Louis, Missouri, pursuant to an order of the above Court, allowing an appeal, filed and entered in the Clerk's office of the District Court of the United States for the District of Minnesota, on February 16, 1933, from an Interlocutory Decree, signed, filed and entered on the 11th day of February, 1933, in that certain Equity Suit No. 2119, wherein you are plaintiff and appellee, and E. H. Snow, and E. H. Snow, d. b. a. Snow's Hatcheries and Snow's Incubator Company, are the defendants, appellants, to show cause, if any there be, why the said Decree, rendered against the said appellants, should not be corrected and reversed, and why speedy justice should not be done to the parties in that behalf.

Witness the Honorable Joseph W. Molyneaux, United States District Judge for U. S. District of Minnesota, Fourth Division, this 21st day of February, 1933, and of the One Hundred and Fifty-Seventh year of the Independence of the United States.

JOSEPH W. MOLYNEAUX,
U. S. District Judge for the District of Minnesota.

Service of the above Citation and receipt of copy thereof, is hereby admitted and acknowledged this 21st day of February, 1933.

SAMUEL B. SMITH,
By Paul, Paul & Moore,
His Attorneys of Record.

Endorsed: Filed in U. S. District Court on Feb. 21, 1933.

1001 (Stipulation for Extension of Time to File Transcript and Order Granting Same.)

Stipulation.

It Is Hereby Stipulated and Agreed, by and between the counsel for the respective parties hereto, that the time for return under the Citation and for docketing the appeal herein be enlarged and extended to and including the 1st day of May, 1933, and that an order to that effect may be entered herein without further notice.

Signed at Minneapolis, Minnesota this 16th day of March, 1933.

PAUL, PAUL & MOORE,
Counsel for Plaintiff-Appellee.

WILLIAMSON & WILLIAMSON,
Counsel for Defendant-Appellant.

Order.

The foregoing stipulation is hereby approved, and it is hereby

Ordered, that the time for the return, under the Citation, and for docketing the appeal herein, shall be and is hereby enlarged and extended to and including the 1st day of May, 1933.

Dated this 16th day of March, 1933.

JOSEPH W. MOLYNEAUX,
U. S. District Judge.

(Endorsed): Filed Mar. 16, 1933, Joel M. Dickey, Clerk, By Thomas H. Howard, Deputy.

1002 (Stipulation for Further Extension of Time to File Transcript and Order Granting Same.)

It Is Hereby Stipulated And Agreed, by and between the counsel for the respective parties hereto, that the time for return under the Citation and for docketing the appeal herein be enlarged and extended to and including the 1st day of June, 1933, and that an order to that effect may be entered herein without further notice.

Signed at Minneapolis, Minnesota, this 10th day of April, 1933.

WILLIAMSON & WILLIAMSON,
Attorneys for Defendant-Appellant.

Signed at Chicago, Ill., this 12th day of April, 1933.

A. L. ELY,
Attorney for Plaintiff-Appellee.

Order.

The foregoing Stipulation is hereby approved, and it is hereby

Ordered, that the time for return, under the Citation, and for docketing the appeal herein, shall be and is hereby enlarged and extended to and including the 1st day of June, 1933.

JOSEPH W. MOLYNEAUX,
U. S. District Judge.

Dated this 20th day of April, 1933.

(Endorsed): Filed Apl. 20, 1933, Joel M. Dickey, Clerk, By Thomas H. Howard, Deputy.

1003 Stipulated Praecipe for Transcript.

To the Clerk of the Court:

It Is Hereby Stipulated, That the hereinbelow identified portions of the record before the trial court shall be included in the typewritten transcript on appeal:

1. The Plaintiff's Bill of Complaint.
2. The Plaintiff's Bill of Particulars.
3. The Defendants' Answer.
4. The Trial Court's Order of November 5, 1932.

5. The Defendants' Response to the said Order of November 5, 1932. Which Order was filed November 7, 1932.

6. Stipulation for the usage of copies of patents and photostats of publications and as to the title to the Smith patent in suit.

7. The testimony of the hereinbelow named witnesses, part thereof in narrative form and part thereof in full, identified by page references to the typewritten trial record and arranged in the order taken, to-wit:

Plaintiff's Prima Facie Case.

Joseph I. Taggart, pp. 3-148, inclusive, part thereof in narrative form and part thereof in full.

Harry B. Perkins, pp. 149-163, inclusive, in narrative form.

Earl H. Snow, pp. 164-165, inclusive, in narrative form.

Joseph I. Taggart (recall) pp. 165-168, inclusive. part thereof in narrative form and part thereof in full.

Defendant's Case.

Samuel B. Smith, the plaintiff, examined as the adverse party, pp. 169-186, inclusive, in narrative form.

E. H. Snow, the defendant, pp. 186-287, inclusive, part thereof in narrative form and part thereof in full.

Nora Snow, pp. 288-289, inclusive, in narrative form.

Professor Frank B. Rowley, pp. 290-616, inclusive, part thereof in narrative form and part thereof in full.

Plaintiff's Rebuttal Case.

Lena Laux, pp. 617-643, inclusive, in full.

Clarence J. Holmes, pp. 644-648, inclusive, in narrative form.

1004 Malcolm G. Reynolds, pp. 649-653, inclusive in narrative form.

Harold E. Davis, pp. 654-662, inclusive, in narrative form.

Joseph I. Taggart, pp. 663-690, inclusive, and page 691, down to expression "Plaintiff rests", part thereof in narrative form and part thereof in full.

Defendants' Surrebuttal Case.

Nora Snow, pp. 693 to line 5 from bottom on p. 708, in full.

8. Plaintiff's Exhibits, to-wit:

1. Copy of Smith Patent in suit No. 1,262,860, of April 16, 1918. (Introduced on page A-28, at end of Mr. Ely's opening statement).

2. Chart entitled "Days of Incubation". (Introduced on page 29).

3. Chart entitled "Record of Heat Development in Eggs of the Common Fowl. (Introduced on page 29).

4. Photograph attached to Exhibit 3. (Introduced on page 30).

5. Taggart's pencil sketch. (Introduced on page 30).

6. Photo 1475—Angle view Plaintiff's Smith Commercial machine. (Introduced on page 38).

6A. Photo 1476—Front view Plaintiff's Smith Commercial machine. (Introduced on page 38).

6B. Photo 1477—Plaintiff's Smith Commercial machine with front removed—curtains being drawn back. (Introduced on page 38).

6C. Photo 1478—Plaintiff's Smith Commercial machine with side removed and curtains removed. (Introduced on page 38).

7, 7A and 7B. Scale drawings of Plaintiff's Smith Commercial machine. (Introduced on page 47).

8, 8A and 8B. 3 Sheets Snow advertisements. (Introduced on page 59).

9. Contract for purchase of Snow machine. (Introduced on page 60).

10. Photo 1472—Front View of Snow Model. (Introduced on page 75).

10A. Photo 1471—Angle view same machine. (Introduced on page 75).

10B. Photo 1473—Snow model—front removed. (Introduced on page 75).

10C. Photo 1474—Side of Corridor Snow Model. (Introduced on page 76).

10D. Photo 1460—Side of Snow Model with trays removed. (Introduced on page 76).

10E. Photo 1458—Detailed view hatching rack, Snow model. (Introduced on page 76).

1005 11. Catalogue of the Robbins Incubator Co. (Introduced on page 78).

12. Taggart's main or cross sectional test data sheet of plaintiff's model of Snow machine. (Introduced on page 89).

12AA. Taggart's Test data sheet taken on line A-A of Exhibit 12. (Introduced on page 89).

12BB. Taggart's Test data sheet taken on line B-B of Exhibit 12. (Introduced on page 89).

12CC. Taggart's Test data sheet taken on line C-C of Exhibit 12. (Introduced on page 89).

12DD. Taggart's Test data sheet taken on line D-D of Exhibit 12. (Introduced on page 89).

12EE. Taggart's Test data sheet taken on line E-E of Exhibit 12. (Introduced on page 89).

12FF. Taggart's Test data sheet taken on line F-F of Exhibit 12. (Introduced on page 89).

12GG. Taggart's Test data sheet taken on line G-G of Exhibit 12. (Introduced on page 89).

12HH. Taggart's Test data sheet taken on line H-H of Exhibit 12. (Introduced on page 89).

12JJ. Taggart's Test data sheet taken on line J-J of Exhibit 12. (Introduced on page 89).

12KK. Taggart's Test data sheet taken on line K-K of Exhibit 12. (Introduced on page 89).

13. Taggart's colored main or cross section test data sheet of plaintiff's model of Snow machine. (Introduced on page 92).

13BB. Taggart's colored test data sheet taken on line B-B of Exhibit 13. (Introduced on page 92).

13CC. Taggart's colored test data sheet taken on line C-C of Exhibit 13. (Introduced on page 92).

13DD. Taggart's colored test data sheet taken on line D-D of Exhibit 13. (Introduced on page 92).

13FF. Taggart's colored test data sheet taken on line F-F of Exhibit 13. (Introduced on page 92).

13GG. Taggart's colored test data sheet taken on line G-G of Exhibit 13. (Introduced on page 92).

13HH. Taggart's colored test data sheet taken on line H-H of Exhibit 13. (Introduced on page 92).

13JJ. Taggart's colored test data sheet taken on line J-J of Exhibit 13. (Introduced on page 92).

13KK. Taggart's colored test data sheet taken on line K-K of Exhibit 13. (Introduced on page 92).

1006 15. Taggart's scale drawing of Snow's Sleepy Eye machine. (Introduced on page 102).

18. Original contract for purchase by Snow of his second Smith incubator. (Introduced on page 158).

19. Tabulated list of incubators sold by Smith Incubator Co. and Buckeye Incubator Co. (Introduced on page 160).

20. Snow's letter to Smith Incubator Co. of October 30/24. (Introduced on page 165).

21. Copy of letter from Smith Incubator Co. to Snow of November 4, 1924. (Introduced on pages 166 and 167).

22. Rowley's test data sheet colored by Taggart—Sheet taken on section line B-B. (Introduced on page 592).

23. Rowley's test data sheet colored by Taggart—Sheet taken on section line D-D. (Introduced on page 592).

14. Respecting this Exhibit 14, Taggart's colored celluloid test model.

It is hereby stipulated that this may be sent up as a physical exhibit.

9. Defendants' Exhibits, to-wit:—

A. Photostat of page 5 of the Cleveland Sunday Plain Dealer of January 23, 1913. (Introduced on page 180).

B. Photostat of page 5 of the Cleveland Leader of Sunday, February 22, 1914. (Introduced on page 181).

C. Snow's egg setting sketch. (Introduced on page 194).

D-1. Photo of Snow's electrically heated incubator exhibited at Flour Exchange showing the interior looking through the doorway, one of the water pans being removed. (Introduced on page 199).

D-2. Photo of same machine similarly taken but showing both water pans in place. (Introduced on page 199).

D-3. Photo of interior of same machine with some trays removed showing one of the agitators. (Introduced on page 199).

D-4. Photo of same machine showing the exterior thereof in perspective. (Introduced on page 199).

D-5. Photo of same machine showing the exterior thereof chiefly in front elevation. (Introduced on page 199).

1007 E-1. Photo showing interior of Snow steam heated Sleepy Eye machine looking through the door. (Introduced on page 201).

E-2. Photo showing similar view with Mr. Snow in corridor. (Introduced on page 201).

E-3. Photo showing the same machine in exterior perspective. (Introduced on page 201).

G-1. Photo showing name plate on door of Snow's Smith machine at Flour Exchange. (Introduced on page 212).

G-2. Photo showing interior of same Snow's Smith machine looking through the doorway. (Introduced on page 212).

G-3. Photo similar to exhibit G-2 with one fan panel dropped. (Introduced on page 212).

J-1. Rowley's test diagram Smith machine—Sheet 1. (Introduced on pages 315 and 316).

J-2. Rowley's test diagram Smith machine—Sheet 2. (Introduced on pages 315 and 316).

L-1. Scale drawing Snow Incubator—front elevation. (Introduced on page 319).

L-2. Scale drawing Snow Incubator—side elevation. (Introduced on page 319).

L-3. Scale drawing Snow Incubator—longitudinal section on line 3-3 of Exhibit L-1 with some parts removed. (Introduced on page 319).

L-4. Scale drawing Snow Incubator—cross section on line 4-4 of Exhibit L-2. (Introduced on page 319).

L-5. Scale drawing Snow Incubator—details. (Introduced on page 319).

M-1. Rowley's test data—test diagram No. 1—vertical transverse section through Snow machine at Flour Exchange (Introduced on page 350).

M-2. Rowley's test data—test diagram No. 2—Sheet No. 1, data taken on line A-A of diagram No. 1, (Exhibit M-1). (Introduced on page 350).

M-3. Rowley's test data—test diagram No. 2—Sheet No. 2, data taken longitudinally of corridor looking to left of diagram No. 1 (Exhibit M-1). (Introduced on page 350).

M-4. Rowley's test data—test diagram No. 2—Sheet No. 3, data taken on line B-B test diagram No. 1 (Exhibit M-1). (Introduced on page 350).

M-5. Rowley's test data—test diagram No. 3—Sheet No. 1, data taken on line C-C of diagram No. 1 (Exhibit M-1). (Introduced on page 350).

M-6. Rowley's test data—test diagram No. 3, Sheet No. 2, data taken on line D-D test diagram No. 1 (Exhibit M-1). (Introduced on page 350).

1008 M-7. Rowley's test data—test diagram No. 4—sheet No. 1—horizontal section through Snow machine at Flour Exchange. (Introduced on page 350).

N-1. Rowley's test data sheet No. 1, Snow's Sleepy Eye machine. (Introduced on pages 352 to 355).

N-2. Rowley's test data sheet No. 2, Snow's Sleepy Eye machine. (Introduced on pages 352 to 355).

N-3. Rowley's test data sheet No. 3, Snow's Sleepy Eye machine. (Introduced on pages 352-355).

O. Certified copy of the file wrapper record of the Smith patent in suit, 1,262,860, of April 16, 1918. (Introduced on page 406).

It is hereby stipulated that this Exhibit O may be regarded as a physical exhibit and transmitted with the other physical exhibits to the Circuit Court of Appeals.

P. Portfolio of prior patents relied upon by defendants which prior patents are specifically identified as follows:—(classified into two groups)

Group A.

Prior Patents Cited on the File Wrapper Record of the Smith Patent in Suit, 1,262,860, of April 16, 1918.

U. S. No. 120,253, Oct. 24, 1871, H. Endemann, "Improvement in Apparatus for Drying Fruits, Meat, Etc."

U. S. No. 152,644, June 30, 1874, E. A. Jones and C. W. Jones, "Fruit Driers".

U. S. No. 272,744, Feb. 20, 1883, A. H. Morgan, "Incubator".

U. S. No. 286,756, Oct. 16, 1883, C. F. Winkler, "Incubator".

U. S. No. 297,676, Apr. 29, 1884, G. Conant, "Device for Preserving Eggs".

U. S. No. 330,457, Nov. 17, 1885, C. Bassini, et al, "Incubator".

U. S. No. 344,474, June 29, 1886, J. W. Campbell, "Heat Regulating Attachment for Incubators".

U. S. No. 559,676, May 5, 1896, T. R. C. Christianson, "Storing Eggs and Apparatus for Turning Them to Keep Them Fresh".

U. S. No. 591,870, Oct. 19, 1897, F. H. Morgan, "Incubator".

U. S. No. 691,837, Jan. 28, 1902, V. S. Bell, "Incubator".

U. S. No. 709,650, Sept. 23, 1902, O. P. Scott, "Incubator".

U. S. No. 745,458, Dec. 1, 1903, [illegible]. C. Perkins, "Electrical Incubator".

U. S. No. 828,181, Aug. 7, 1906, G. H. Boyd, "Incubator".

U. S. No. 891,019, June 16, 1908, L. Verna, "Drying Room".

U. S. No. 916,454, Mar. 30, 1909, V. C. Koons, "Incubator".

U. S. No. 949,653, Feb. 15, 1910, J. H. Klinke, "Incubator".

U. S. No. 1,100,146, June 16, 1914, J. O. Olson, "Incubator".

U. S. No. 1,137,752, May 4, 1915, G. E. Goldstein, "Apparatus for Curing or Artificially Ageing Cigars".

U. S. No. 1,160,793, Nov. 16, 1915, S. S. VanKeuren, "Incubator".

German Patent No. 155,917, Nov. 7, 1901. E. Stulik, "Incubating Process and Device for Group Charging and Simultaneous Treatment of the Groups of Eggs Inserted at Different Times into the Incubating Apparatus".

Certified English Translation of said German Patent to Stulik, 155,917, of Nov. 7, 1901. (Introduced page 416).

1009 Group B.

Prior Patents Set Up in Answer but not Cited on File Wrapper Record of the Smith Patent, 1,262,860, of April 16, 1918, in Suit.

U. S. No. 3,019, Mar. 30, 1843, N. E. Guerin, "Egg Hatching Apparatus".

U. S. No. 360,223, Mar. 29, 1887, E. H. Johnson, "Electrical Apparatus for Heating and Cooling Buildings".

U. S. No. 426,321, Apr. 22, 1890, J. K. Proctor & J. H. Knowles, "Drying Machine".

U. S. No. 843,909, Feb. 12, 1907, F. M. Peters & H. H. Hungerford, "Atmosphere Regulating System".

U. S. No. 992,622, May 16, 1911, J. Wiebe, "Egg Drier".

U. S. No. 1,010,809, Dec. 5, 1911, J. Schmidt & H. Schütterle, "Apparatus for Drying Macaroni and Like Bakery Products".

U. S. No. 1,075,747, Oct. 14, 1913, C. W. Zimmer, "Semi-fireless Incubator".

Q. Photostats of two pages of Ure's Dictionary of Arts, Manufactures and Mines Published by Longmans, Green & Co., London England, in 1867, (one photostat being of the title page of said book and the other being of the article entitled "Incubation Artificial", appearing on pp. 652 and 653 of Vol. II. of that publication). (Introduced on page 415).

R. Photostat of pages 2704 and 2705, Vol. III. of Knight's American Mechanical Dictionary, published by Houghton, Mifflin & Company, in Boston, Massachusetts, in 1884, including an article entitled "Ventilator", appearing on said pages of said book. (Introduced on page 425).

S. Rowley's Sketch of one compartment of Smith's 1913 and 1914 incubating machine, testified to by said Smith. (Introduced on page 482).

T. Schwartz patent, 535,175, of March 5, 1895. (Introduced on page 614).

U. Drawing entitled "Incubator of E. H. Snow, Sleepy Eye, Minn." taken from the transcript of the Boling case

and illustrating one of the Boling machines. (Introduced page 615).

V. Petersime patent, 1,562,787, of Nov. 24, 1925, illustrating the structure of the Petersime machine involved in the Petersime case. (Introduced on page 616).

10. Stipulation as to Certain Large Sized Machine Exhibits of the Respective Parties.

In respect to the plaintiff's machine exhibits, numbered 16 and 17, respectively, introduced on page 142 of the typewritten record, said exhibit 16 was a full sized working specimen of plaintiff's Smith Incubator, and said exhibit 17 was a full sized working specimen of the plaintiff's model or alleged reproduction of the defendants' steam heated machine; and respecting the defendants' Exhibit F, introduced
1010 on page 203 of the typewritten record, the same was a full sized working specimen of the defendant, Snow's electrically heated incubator; and respecting defendant's Exhibit H, introduced on page 213 of the typewritten record, the same was a full sized working specimen of the defendant, Snow's Smith machine.

All of the said four machine exhibits, above identified, are of such large size that they could not be set up and operated in the courtroom of the Circuit Court of Appeals for the Eighth Circuit, each and all of said machines being about 14 feet long by 11 or 12 feet wide, and about 8 feet high. In view of these facts,

It Is Hereby Stipulated, that none of said four machine exhibits above identified, need to be certified up to the Circuit Court of Appeals by the Clerk of the trial court, but it is hereby further stipulated that the respective parties to the suit, if they, or either thereof, should desire, may set up their said respective exhibit machines in the particular city wherein the said Circuit Court of Appeals will hear the appellants' appeal, and allow the Judges of said Court to inspect the said machines, in the presence of counsel for the respective parties, at or about the time when the hearing of the Appellant's appeal shall be had by the said Court.

11. The trial court, Joseph W. Molyneaux's Memorandum of Decision, dated February 7th, 1933.

12. The Interlocutory Decree, signed and filed by his Honor, Joseph W. Molyneaux, February 11th, 1933.

13. Petition for Appeal and Supersedeas Order, dated February 16th, 1933, and the Order of the trial court, Joseph

W. Molyneaux, allowing said appeal and supersedeas, signed and filed February 16th, 1933.

1011 14. Copy of the Defendants' Supersedeas Bond, executed February 20, 1933, and approved by the trial court, Joseph W. Molyneaux, and filed February 21, 1933.

15. Assignment of Errors, signed, served on plaintiff's counsel, and filed with the Clerk of Court, February 18, 1933.

16. Citation on Appeal, signed by the trial court, Judge Joseph W. Molyneaux, served on plaintiff's counsel and filed with the Clerk of Court, February 21st, 1933.

17. Stipulation and Order of the Court, dated March 16, 1933, enlarging and extending the time for the return under the Citation and for docketing the appeal in this case to and including the first day of May, 1933.

Signed at Minneapolis, Minnesota, this 18th day of March, 1933.

WILLIAMSON & WILLIAMSON,
Attorneys for Defendants-Appellants.

Signed at Akron, O., this 20th day of March, 1933.

A. L. ELY,
Attorney for Plaintiff-Appellee.

The foregoing Stipulated Praecipe for Transcript and all the Stipulations therein contained are hereby approved this 22nd day of March, 1933.

JOSEPH W. MOLYNEAUX,
District Judge.

(Endorsed): Filed Mar. 22, 1933, Joel M. Dickey, Clerk, By Thomas H. Howard, Deputy.

1012 (Stipulation that Certain Exhibits Be Sent to the Circuit Court of Appeals as Original Exhibits and Order Granting Same.)

Subject to the approval of the Court,

It Is Hereby Stipulated, That the plaintiff's exhibits, hereinbelow identified, called for in the Stipulated Praecipe for Transcript, may be sent up to the Circuit Court of Appeals as physical exhibits, to-wit:

Plaintiff's Exhibits 8, 8A and 8B, the same being three sheets of Snow's advertisements, and Plaintiff's Exhibit No. 11, Catalogue of the Robbins Incubator Co.

Signed at Minneapolis, Minnesota, this 10th day of April, 1933.

WILLIAMSON & WILLIAMSON,
Counsel for Defendant-Appellant.

Signed at Chicago, Ill., this 12th day of April, 1933.

A. L. ELY,
Counsel for Plaintiff-Appellee.

Order.

The foregoing Stipulation is hereby approved, and, it is hereby

Ordered, that the plaintiff's exhibits, identified in the foregoing Stipulation, may be sent up to the Circuit Court of Appeals as physical exhibits.

Dated this 20th day of April, 1933.

JOSEPH W. MOLYNEAUX,
U. S. District Judge.

(Endorsed): Filed Apl. 20, 1933, Joel M. Dickey, Clerk, By Thomas H. Howard, Deputy.

---

26 (Approved Statement of Evidence.)

In the United States District Court, District of Minnesota, Fourth Division.

Samuel B. Smith, Plaintiff,
No. 2119. vs. Equity.
E. H. Snow and E. H. Snow, d. b. a. Snow's Hatcheries and Snow's Incubator Company, Defendant.

Before: His Honor, Joseph W. Molyneaux, District Judge,

September Term, 1932.

Minneapolis, Minnesota, November 16, 1932, 10:00 A. M.

Appearances:

Mr. Albert L. Ely, of Cleveland, Ohio, and Messrs. Paul, Paul & Moore, represented by Mr. Harold Olsen, on behalf of the plaintiff.

Messrs. Williamson & Williamson, represented by Messrs. James F. Williamson and Ralph E. Williamson, on behalf of the defendants.

At the close of Mr. Ely's opening statement, on behalf of the plaintiff, and before any witnesses were called, a copy of the Smith patent in suit, 1,262,860, of April 16, 1918, was offered and received into evidence and marked as "Plaintiff's Exhibit No. 1".

---

27 Transcript of the Testimony of All Witnesses Examined.

Plaintiff's Prima Facie Case.

JOSEPH I. TAGGART'S Testimony Under Direct Examination.

Joseph I. Taggart, called as a witness on behalf of the plaintiff, being first duly sworn, testified to the following effect, his testimony being here reproduced, part of it in narrative form and part of it in full, to-wit:

He states that he is forty-five years old, resides at 1311 West 89th Street, Cleveland, Ohio, and that he is Assistant General Manager of the Smith Incubator Company, located at Cleveland, Ohio, being in direct charge of the erection and servicing of Smith Incubators, and research work, and also assists in the supervision of the manufacture of machines. Says that the said Smith Incubator Company manufactures incubators under the Smith patent. Says that he is a graduate of the Ohio Wesleyan University, where he specialized in zoology and graduated with high honors on that subject. Was also Assistant to the Professor for two years and gave a great deal of time to the study of embryology, using hen eggs, principally because of their uniformity and accessibility. Also studied the embryology of a lizard and prepared a thesis on that study.

Having been asked what had been his particular experience with regard to incubation and hatching since he left school, his answer was, in substance, as follows:

28 Says that he associated himself with Dr. Smith in 1923, first as a salesman and then was placed in charge of the Smith Standard Company, a name given to a large hatchery owned and operated by Dr. Smith in Cleveland. This hatchery had a million egg capacity. Then, for the next four years, was in charge of the flocks which produced the eggs for that hatchery, and also had charge of the

sales and supervision of that plant. Said plant did not operate throughout the entire calendar year, but only part of the year, and the rest of his time was devoted to work in connection with the Smith Incubator Company, the two companies occupying the same offices. He states that in this work it was his duty to make himself acquainted with all types of incubators in the country to study their methods of operation, contact the various universities to find out what they were doing with incubator problems, and to become generally informed on all the "subject of incubation". This work took him into all of the States of the Union, and most thereof he visited several times. In 1927, the Smith Standard Company was closed, or divided up into smaller units and sold, because the work of hatching chicks was interfering with the sale of incubators of the Smith Incubator Company, and since that time he has been associated entirely with the Smith Incubator Company.

29 The next question put to the witness, on page 5 of the typewritten record, read as follows:—

"Q. Now, Mr. Taggart, will you please just briefly describe the process of incubation, the hatching of an egg, just generally, as a foundation for what is coming."

The Witness' answer to this last above quoted question and to a large number of other questions, the last of which ends in the sixth line from the bottom of page 102 of the typewritten record, or in other words, his testimony in full from that point on page 5 to near the end of page 102 of the typewritten record, read as follows:—

"A. The egg, at the time it is laid, is full, that is, the shell is full. If the egg is fertile, the embryo has already started development, because the egg is generally fertilized twenty-four to thirty hours before it leaves the hen. In other words, when the egg drops from the ovary into the oviduct, it is just the yolk, or the yellow. The female
30 germ is a small spot on this yolk. As the egg passes down the oviduct, there are places where certain layers of albumen are deposited on the side of the yolk. There are three different layers of albumen, and on top,—or around this entire mass is a thin membrane, and a thin shell. This is the process of the yolk, of the albumen forming around the yolk; this is from twenty-four to thirty hours; that also includes the shell, or, from the time the yolk is dropped into the oviduct, to the time the egg is laid, is about twenty-four to thirty hours. This varies with individuals.

Now, the germ spot on the egg is fertilized almost immediately after dropping into the oviduct. The male germ is there waiting for it, and because of the temperature being right, germination starts right away, in a fertile egg, by the time it is laid, the chick is twenty-four to thirty-six hours on its way.

Now, after the egg is laid, normally it is chilled or cooled, and when cooled, germination stops, and if we hold the egg below a temperature of seventy degrees, the germination remains dormant, if it is held above seventy degrees, it progresses slowly, but to make it real active, it should be brought up in the neighborhood of body temperature,—of our body temperature, of around 99 to 100 degrees.

After it is placed in the incubator, this germination starts again in its normal way, and continues for twenty-one days, unless interrupted by death or some other means.

31 As the egg progresses, the white of the egg is used up as food. During the first seventeen days that the egg is in the incubator, it is living almost entirely for maintenance on the white of the egg. At the seventeenth day, most of it has been absorbed, and it begins to use the yellow or the yolk. Up to this time, the yolk has hung outside of the chick,—as a sack attached at the navel. By the twenty-first day, about half of this yolk has been absorbed as food. The other half has been drawn into the body of the chick, and at hatching time the chick has within it a yolk about half the size of the original yolk. That is still used as food, so that during the first forty-eight hours or fifty hours after hatching, a chick does not need to eat. It has its food and water with it in this form of the yolk.

Now, during its hatching period, or incubation period, the chick, or the embryo has been using up its food, and converted it into body tissues. It has also required oxygen and has given off carbon dioxid. This process of assimilating food and oxygen naturally produces heat.

Early in the stage, the embryo is so small that the heat produced is negligible, and, as incubation progresses, the chick becomes large enough so that it does develop a considerable quantity of heat.

Now, I have prepared a chart here that shows this heat development during the different days of incubation. There is one which is placed in front of Your Honor (indicat-
32 ing). The heavy curving line, or curve, represents the units of heat that are developed on the different

days of incubation. The days of incubation are recorded across the bottom of the graph. The figures on the right hand side of the graph give the units of heat in calories. These are known as the large calory, that represent one thousand of the food calories. To make it clearer, perhaps, one calory is equal to four British thermal units.

You will note, from this graph, that at the first four or five days there is no heat given off; in fact, the tests show that there is heat absorbed. From the fifth day on, there is an increasing amount of heat; you will note that on the seventeenth day the rising curve is interrupted for about twenty-four hours. That is the period when the chick is changing from the white of the egg as food over to yolk. The heat development appears to rest during that period, but after it goes on its new diet of the yolk the heat development rises rapidly, so that by the twenty-first day there are five calories of heat generated by each egg.

Now, I have also shown that heat development in another way. May I have that box, please (indicating):

(Box submitted to the witness.)

I have here a box, of which you have a picture of it there (indicating.) This box is heavily insulated. It is right underneath the next chart, attached to the next chart (indicating). In this box, I would place eggs, all at one
33 stage of incubation; for example, I would take an egg, or I would take a dozen eggs that were just ready to hatch. I will place this box first in the incubator, as it appears by the picture of the incubator. Then I would take this dozen eggs out of the hatching rack, and place them in this box, and put a lid on, and seal this box, so there would be no escape of air or heat from the box. And through the side of the box I would put a fever thermometer, or a clinical thermometer, so that the bulb would record the temperature that was within the box, so that I was able to read the temperature from the outside, as shown in the picture.

Now, with eggs that are twenty-one days old, when they go into the box, that is, when they first go in there they should be or they have been of the temperature of the incubator and, in this case, the temperature of the incubator was 99 degrees. Now, on the bottom, or next to the bottom column; the bottom row there (indicating), I have shown eggs that are twenty days and sixteen hours old when they went into the incubator.

Q. When they went into what?

A. When they went into the box. Thirty minutes later the fever thermometer showed a temperature of 101.8 degrees. Another reading was taken in thirty minutes, at which time the temperature was 102.4 degrees. These readings I continued at thirty minute intervals, up to five hours and a half, at which time the temperature within this
34 box was 110 degrees; in other words, showing that the dozen eggs which were then within the box had developed sufficient heat so that the temperature within the box was 110 degrees.

Now, at the same time, I took eggs that were twenty days and sixteen hours old, eggs that had already pipped,—the chicks had broken their shells, and they got ready to come out. And, in that connection, you will note that the heat development was more rapid, and that by the end of four hours we got a temperature within the box of 111 degrees, which was the top reading of the fever thermometer, and we could not record a higher temperature.

Now, going back up this scale (indicating), we find that by the time we started with eggs that were nine days and sixteen hours old, we were not able to develop any appreciable amount of heat; that thirty minutes after they were placed in the incubator we had a temperature there of 98.6; this gradually got back to 99, but did not get any higher.

Now, that is also true of the seven day and the five day eggs, but when we are in the twelve day eggs, we have got a temperature that rose in five and one-half hours to 101.8 degrees, which is almost three degrees higher than the temperature of the incubator at which the eggs were at the time that they were placed in this machine, or in this box.

This chart therefore is simply to show, in a simple test of this kind, that there is a very appreciable amount of heat developed among the eggs in the later stages of in-
35 cubation, but among those in the earlier stages, the quantity of heat is almost negligible.

Q. Mr. Taggart, at what time in the process approximately does the egg change over from this endothermic, that is, where the heat has to be applied to it, to the exothermic, where there is an excess heat,—that is, at what point?

A. It would be between the ninth and the twelfth day; midway is about as near as you can place it.

Q. That is, midway of the total period of time required for hatching?

A. Of the twenty-one days for hatching.

Q. Now, I believe you have not said anything in this discussion of yours about the evaporation of the water content; what are the requirements of that?

A. At the time the egg is first laid, I stated that the shell was full. As the egg is exposed to atmosphere, there is an evaporation of the moisture from within the egg to the outside, and from your own experience you have noticed the air cells of different size in the large end of the incubator.

Q. In the large end of the egg, you mean?

A. Yes, in the large end of the egg; these air cells increase by evaporation. A day or so after the egg is laid, it is about the size of a dime; and then, it depends on how the egg is kept, the air surrounding it, the dryness of it, and the access of air to it, as to how rapidly it evaporates.

Q. Now, in incubation, this evaporation is necessary,
36 but it must be controlled. If we allow the egg to evaporate twenty-five per cent by the time it is hatched, that is, by the time the egg hatches, we will have a small chick, a chick with short down, and it will be an inferior chick, decidedly inferior.

If we can control that evaporation, so that it does not lose over fifteen per cent,—so that the egg does not lose over fifteen per cent weight by evaporation, we can get a much better chick. This evaporation must be gradual; the evaporated moisture from the surface of the egg is continuallly cooling it. And, although there is a small amount of heat developed from the very beginning, this evaporation of water moisture offsets the heat development, and it is, perhaps, the tenth or eleventh day before the heat development within the chick, within the egg, is strong enough to overcome the cooling effect of this evaporating moisture.

37 Q. Were you familiar with the prior practical state of the incubation art before 1915, Mr. Taggart?

A. Yes, sir.

Q. Just briefly state what that was, will you please? Just briefly.

A. We have been hatching eggs by artificial incubation for two or three thousand years. In China, for example, for those of the Orient, they have been hatching them artificially as long as we know—have any records. The Egyptian incubators of two thousand years ago are a matter of history. During all the stage prior to the Smith invention the only incubators that had reached commercial use were small,—in this country at least, were small machines. The average incubator would hold about three hundred eggs. The eggs were placed in these machines on one level with the heating means

above and a means for the intake of fresh air at the bottom, so that the temperature above the egg was perhaps 103 and the temperature below the egg was perhaps 96. In this they were copying the hen. The body of a hen is above 103, as her normal temperature is 105 to 106, but the nest being on the ground is naturally cooler. All the early incubators operated on that principle, that you would have a different temperature above the eggs from what you would have below. It was necessary to turn the eggs frequently to keep them of a uniform temperature. This was done by the hen and is done by all the early incubators. It was customary to have one
38 thermostat for each cabinet and also a humidifying device and a ventilating system for each cabinet. Now as commercial incubation developed in this country they would connect up a number of these cabinets together, not unlike sectional bookcases. You might have one heating unit, but have as many as fifty or a hundred cabinets attached to that heating unit, by a system of pipes or radiators or they might heat each one with electricity, but each of the units were a separate incubator within themselves. There are some had reached as high as a thousand eggs in every machine, but that was not the general practice because they were not able to keep a uniform temperature throughout the entire machine. All these machines that are prior to this Smith invention were of a still air type. That is, there was no air circulation through there. They depended on convection current solely to distribute the air and the fresh air, being brought in at the bottom, would filter up through and would be let out at the top. Because of the way these machines were restricted, it was considered the practical thing to build special houses for them, and the term incubator cellar became well known in the industry. They would build an incubator cellar that would in some cases resemble a fruit cellar. That would be half submerged within the ground. They wanted to protect the cabinet from drafts. There were no drafts within the machine and they even wanted to protect the cabinets from drafts, because a draft against one side of the incubator would have a tendency to make that side
39 a little cooler and the eggs then cooler on one side than the other. Those that are too cool will not hatch well and will hatch slower.

Q. What about setting the eggs? How were they set in these cabinets?

A. They were all set at one time in any particular cabinet. It was not the practice at all to have stages of incubation. As a matter of fact the incubators that were operated at that

time, the manufacturers gave instructions to start them at one temperature and keep changing the temperature as the incubation progressed and they didn't consider it was possible to have successful incubation with eggs in different stages in the same machine.

The Court: Did the hen turn her eggs over?

The Witness: Repeatedly. She does it with her feet and also with her beak.

Q. Do you know whether there were any practical incubators in use which had more than one layer of eggs?

A. I have not been able to find any.

Q. Do you know of any reason why?

A. Yes. With simply convectional currents the layer of eggs, if they were placed in two layers, the upper layer would not have the same temperature as the lower layer because they were still air machines and the heat would naturally rise to the top and, if you had it, the top layer of eggs would be much warmer than that immediately below it.

40 Mr. Williamson: If this witness is answering about the whole prior art, then I object to it as being based on hearsay. If he is simply testifying about his own experience as to what he has seen then I have no objection to it.

The Court: I suppose that he is testifying to his experience, and as far as the prior art is concerned the Court will take that from the literature.

Mr. Ely: Yes, simply a foundation for what is to come. I am about through with this, Your Honor.

Q. Do you know what sort of results they would get from these cabinet machines, Mr. Taggart?

A. The results varied greatly with the incubator and the skill of the operator and of course with the condition of the eggs. In 1909, at the time I was especially interested in the work in college, a 50 per cent hatch on the average was considered good. We would have individual cases, where it would run up well over that, but the average hatch, if we got 50 per cent, we supposed it was good.

Q. Now, have you testified in any suits concerning the Smith patent? A. Yes, sir.

Q. Will you please just briefly describe the Smith patent to his Honor? Have you got your copy there, Mr. Taggart?

A. No sir, I have not.

Mr. Williamson: I suppose your question means his understanding of the Smith patent, Mr. Ely.

41 A. The Smith patent calls for a process of incubation whereby large numbers of eggs can be carried from the fresh eggs to baby chicks. It also requires that these eggs be in various stages of incubation, that is from fresh eggs through various stages down to eggs that are hatching. Now these may be in two different stages or may be in a dozen, depending upon the way the operator wishes to set them. It also requires that this—to carry out this process that there must be some power driven current of air, that is not convectional currents, a current of air circulating among the egg trays of sufficient velocity to keep the temperature within the chamber at substantially the same temperature throughout. Reading from page 1, line 40, "The temperature of circulating air should be such as will prevent the eggs in the early stage of incubation from falling below 100° and the
42 speed or velocity of the circulating air should be such as to carry the heat away from the eggs in the later stages of incubation and thereby hold the temperature of those eggs at 105 degrees or slightly below that. It is manifest that the temperature will remain practically the same throughout the column of eggs, but the air is impelled with sufficient velocity to carry the heat away from the eggs which happen to be in the advanced stage of incubation." Now in order to have this air circulating properly to carry out this process the air cannot just pass through the eggs once, and then outside the incubator. If you were to do that as you would be passing fresh air over the eggs all of the time and would dry them out entirely too rapidly, so it is necessary to have restricted openings for the intake of fresh air and discharge of foul air, so that you can conserve this moisture. Now, to carry out this process—in other words, the air must be circulated in cycles, one after the other continuously. If that is not done it is not possible to carry out the process. Now in that way the moisture is conserved and the temperature is kept uniform. Now to carry out this process it is not necessary that these eggs be arranged in any particular order, because if the air is circulating with sufficient velocity it will carry the heat from the eggs in the advanced stage to those in the lesser stage or earlier stages of incubation and keep the temperature practically uniform.

Now to carry out this process of incubation as Smith
43 has described a preferred apparatus. On Fig. 1 he shows a closed chamber with—a cross section of a closed chamber where we have a central corridor and the eggs arranged in columns or tiers on both sides of the corridor. Now Fig. 3 shows one side of this

corridor. You will note that at the top of it or near the top of the corridor there are egg trays that are flat, and these are arranged as stationary. Immediately below that there are eggs in racks, egg trays in racks that can be tilted and again at the bottom there are egg trays that are flat. In this preferred apparatus of Smith's he places the eggs in the trays at the top.

The Court: Which?

The Witness: On Fig. 1 or Fig. 3, either one.

Mr. Ely: Fig. 1, Your Honor, shows.

The Witness: The top 3 trays, as he has shown up there, are stationary, or the eggs are kept flat—all the egg trays are kept flat. The reason for that was at that stage of incubation it was considered desirable or it was considered not necessary to turn them. Of course the hens always turned them, but they considered it was not necessary to turn them at that stage.

In the turning racks that are immediately below there the eggs were placed in there and the racks were tilted with one side down, first one side down and then the other. It was customary to turn these at least twice a day, because the eggs

—the eggs, you will observe, were placed in there on
44 end, in the trays on end, the little end down. Then as the entire tray was tilted to the right or to the left, the egg would be turned at approximately a 45 degree angle. That turning was necessary. The eggs were, as stated before, in this preferred apparatus Smith placed the eggs in these upper trays first, then lowered them as the—as hatching progressed, so that by the 18th day the eggs would be on the bottom of the turning racks. The last three days the eggs were placed in the hatching racks which are at the bottom. There they were again flat. Now in the top of this corridor in Fig. 3, and it also shows—or in Fig. 1, and also shows it in Fig. 3, there are two fans, these fans were so—

Mr. Ely: Your Honor, right here.

The Witness: They are numbered 26.

The Court: 21 and 23.

Mr. Williamson: 18.

Mr. Ely: 18 is the fan. 21 is the motor bracket.

The Witness: Yes. They show two fans, 21 the paddle 18 is shown attached to the fan, of course. In this preferred apparatus he placed the fans at the top with heating coils at the side of them, and the air was forced down this corridor to the floor where it passed in among the eggs and the egg trays, and then it passed upward through the—through and between the egg trays until it reached a point near the top of the incubator. The air was then drawn back into the fans and re-circulated time and again.

45 Q. Just point out—follow that circuit around, will you, Mr. Taggart?

The Court: Comes around here.

A. It comes down from the fan down to the floor and up through and around and is re-circulated.

Mr. Williamson: Well, the curtains there make it go down.

A. Time and again.

Mr. Williamson: The curtains make it go—

A. Now, since Smith placed his hatching trays at the bottom, or the warmest eggs there, they were placed there because of the dirt and litter that would be created at the time of the hatching.

The Court: Those eggs are lowered?

The Witness: Yes sir, in his preferred apparatus he took the eggs out here and lowered them here. We will say these were three days old; we will say seven, ten and eighteen, and these down here we will say are twenty days old.

Mr. Williamson: Well, the curtains have to—

Mr. Ely: Just a minute.

A. Since the hatching eggs were placed at the bottom of the incubator it was necessary that those eggs be kept cool.

The Court: They first received this draft.

The Witness: Yes. In this arrangement, and then the heat—or they are cooled off, the air picks up heat from these and carries it up through and largely between the trays
46 in the column above. You will note that there are wide spaces between the trays when they are turned, and while the air starts up through them it would naturally get over into these air columns and go up the air columns between the trays.

The Court: They come up this air column and then diffuse into here, do they?

The Witness: Yes, sir. Now in order to carry out this process with this preferred apparatus Smith used fans of comparatively low volume, so that it was desirable to have curtains on the sides of the corridor so as to make sure that these eggs in the most advanced stage of incubation received sufficient air currents. Now in so doing the heat would be picked up from these, and would be carried and distributed to other parts of the incubator. After the heat from here passed directly up the air column, it might come around through the fan and around again in recurring cycles. Now as far as the heat transfer is concerned it makes no difference whether the air goes in this direction or if it goes in the other direction because it would pick up heat here and carry it around to the eggs in the earlier stages of incubation. Nor would it make any difference if we had these sandwiched in a different way. For example, we will say the twenty day took the place of the ten day eggs and the three day remained as they were, or in some other arrangement. It would make no difference whether the air went in this direction or air
47 in this direction, the heat transfer would be the same.

The Court: As I understand you, you place these twenty day eggs in the bottom so that the air will come down and strike them first.

The Witness: The principal reason of putting the twenty day eggs at the bottom is at the time they hatch the shells and the necessary litter a part of that hatching will not be dropping down on the other eggs. There are—there have been incubators manufactured in which the hatching was up at the top, but it is a dirty mess; the droppings from the chicks if they remain in the incubator, litter up the other eggs and so, as a matter of convenience, practically all incubators have the hatching at the bottom.

The Court: I thought these eggs, the twenty day eggs, were the hottest, that is, they were producing heat from the inside and it was necessary to apply this air first to them, to drive the hot air off of them.

The Witness: The point is that the air in here is circulating rapidly and we will say that it takes eight seconds to make the trip. It makes no difference where these eggs are placed, because it is continuous re-cycles. It is re-cycling; the same air passes a given point time and time again.

The Court: It could come around this way then?

The Witness: Yes sir, or to carry out the process or
48 the patent, it could come on the side.

The Court: That is it could go in this way.

The Witness: Yes sir, or the column could be on the side.

Q. What is the percentage, actual percentage of total air in the circuit which passes, which is interchanged from outside to inside?

A. I didn't explain the openings for the intake of fresh air and discharge of foul air. Above each side, as shown here, there is a restricted opening for the intake of a certain amount of fresh air, and above each egg column there is shown an opening, 28, with a discharge of foul air.

The Court: Will enough air reach in there so that the foul air will escape in preference to the other air?

The Witness: No sir, there is an interchange of from one to three per cent of air in actual operation every time. In machines of our own manufacture that we are putting on the market at the present time we hold that exchange of air down to one-half of one per cent. We have never put machines out that have over about three per cent.

The Court: What do you mean when you say foul air escapes? You mean that you keep freshening it by bringing in a small per cent of fresh air?

The Witness: Yes, sir.

Q. What happens to the main body of air, that is the 99 per cent?

49 A. The main body of air goes around again and again in continuous cycles.

Q. Will you just show His Honor where that outlet is in the side view. There is only one outlet, Your Honor.

A. There is only one outlet on each side. Here it shows one outlet, each side. There is an intake over each one, but only one outlet over every column. In other words, this machine, preferred apparatus as shown here, has two fresh air intakes and two openings for the discharge of air.

Q. Now, Mr. Taggart, will you just go over that matter of the function of the continuous cycle of air as a heat equalizer, just briefly?

A. As a hatch of eggs in the machine are in a stage to take up heat and half of them are too warm, if we circulate the air in there with full velocity we—one counteracts or tends to counteract the other and one keeps the other warm, and the temperature within the machine stays uniform. Now for ex-

ample, in the machine of the type that is—of the defendant and also of ours that is being shown here, when those machines are full they hold between 3000 and 3500 pounds of eggs.

The Court: How many eggs would that be?

The Witness: We rate ours as 47,000. The defendant rates his at 45,000. Now this is largely liquid, and you can appreciate the amount of heat that is necessary, or either heat or refrigeration, to change the temperature of 3000 pounds of water or 3000 pounds of a liquid and this large mass of
50 eggs serves as a stabilizer and makes it possible for the—the incubator to operate with less change of temperature than if you have the eggs all in one stage of incubation, or have a small incubator which may be affected by outside temperatures.

51 Q. I wish you would take that matter of current circulation, and explain the matter of the different ages of the eggs placed in the circuit.

A. On my sheet here, I am placing the numbers 3, 7, 10, 14, 18 and 20, which would represent the eggs of the different stages in an incubator, or the number of these which we have in the incubator. Now, we have explained that heat is being developed in these bottom three, that is, 14, 18 and 20. The others require heat. Now, as I explained before, that air is circulated in this manner so that that passes 20 first, and then 18, 14, 10, 7 and 3, the heat from these bottom three trays,—the bottom three trays of eggs, will be carried to those in the upper tray, but it does not necessarily mean that it all takes place in the same cycle. If the air is traveling in re-cycles, it may touch 20 this time and not touch any of the others, but, on the next circuit, it may touch 10, 7 and 3, or, if any recurring cycle, it may touch the other. In the same way, it makes no difference if you would go in the opposite direction, because you would pick up heat from those that are in the advanced stage, and it would carry them around to the other points just the same, because the air is going round and round, time and again. Now, if we were to arrange these in a different way, we would have 3, 14, 10 and 7, and 20 and 18. If the air passes down and strikes 18 first, and up through, the heat will be carried from those in the advanced stage
52 to those earlier stages of incubation in just the same way; there, again, it makes no difference whether the air goes in one direction or goes in the opposite direction. Now, we can sandwich those in any particular order we want, and we would still have the heat transferred just the same. Now, if the air is passing from fans, or being propelled by

fans, in continuous cycles, and we have trays we will call 14, 3, 7, 20 and 10, and 18, and we will say the air was passing laterally to that column by a fan, so that it drives the air in there, or if the air is again going in cycles out into the eggs and back into the fan, it might pass through 3, and then through 14, and back into the fans, and, on the next cycle, it might pass out through 20, and back into the fan in another way, and back out again through 7, but in this entire trip it travels in recurring cycles continuously, and if it picks up heat at one time and transfers it at one place, and transfers it to another place, it is accomplishing the same function, or it is accomplishing the process of the patent, because the air must travel in recurring cycles, and it makes no difference which way the air goes so long as that air is traveling in a circuit, and in an identifiable current of sufficient velocity to keep the temperature within that chamber neutral.

Q. You said it does not make any difference about the direction of the air. Does it make any difference about the order of the eggs? A. No, sir.

53 The Court: Well, at the same time, if he put those in various positions, he means to say that the changing of those positions of the eggs would not make any difference, and it would keep the air uniform and equal.

The Witness: Exactly.

Mr. Ely: I think I forgot, when we were talking about heat, to put in these charts, and I think I better do that now, before we get any further. I want to introduce in evidence the first chart.

Mr. Williamson: Did he say he made these charts himself?

Q. Did you? A. Yes, sir.

Q. And from studies conducted by yourself?

A. Yes, sir.

Q. And it is a correct representation of what your findings are, is that correct? A. Yes.

Mr. Ely: Then I will introduce this smaller chart, which is headed "Days of Incubation," as Plaintiff's Exhibit 2.

(Chart referred to marked by the reporter for the purpose of identification as Plaintiff's Exhibit 2.)

Q. What are your answers with respect to the data on this larger chart headed "Record Of Heat Development In Eggs Of The Common Fowl?"

A. I prepared the chart from my own experience.

54 Q. It is correct, is it not?

A. Yes.

Mr. Ely: I will introduce this as Plaintiff's Exhibit 3, the chart entitled "Record Of Heat Development In Eggs Of The Common Fowl", and the photograph attached thereto.

Q. What is that?

A. That is a photograph of this box, or a similar box to the one which I have shown here, in which the tests were made.

Q. That is, the tests which are recorded on Exhibit 3?

A. Yes.

Mr. Ely: I will introduce that as Exhibit 4.

(Chart referred to marked by the reporter for the purpose of identification as Plaintiff's Exhibit 3; photograph attached to Plaintiff's Exhibit 3 marked by the reporter for the purpose of identification as Plaintiff's Exhibit 4.)

Mr. Ely: I will also introduce as Exhibit 5, the sketch just made by the witness, the pencil sketch showing the circuits of air.

(Sketch referred to by Mr. Ely marked by the reporter for the purpose of identification as Plaintiff's Exhibit 5.)

Q. Now, Mr. Taggart, you have spoken about the function of this re-cycling circuit of air on the matter of heat interchange, or heat leveling off. Does it have any function with respect to the evaporation you have discussed in your general discussion on incubation?

55 A. Yes, sir, as the air passes the eggs, it has a tendency to pick up a certain amount of moisture. The dryness of the air will determine largely the amount of moisture that it picks up. Now, if we re-cycle the air, we can keep the air moisture so that that controls the evaporation of the eggs. Theoretically, it might be possible to do it some other way, but it certainly is not a practical way. The re-cycling is not only necessary to conserve the moisture, but it is also necessary to keep the temperature uniform.

Q. That is, how is it that the moisture is conserved by re-cycling? Briefly, go over that.

A. By re-cycling the air, it is kept moist. If it were not re-cycled, the moisture that it picks up would be immediately carried outside of the incubator, and fresh air normally would have to come in to take its place. Fresh air, in practically all climates of the United States, is much drier than the incubator air that is desired.

Q. Now, Mr. Taggart, would it be possible, say in a Smith incubator, or an incubator of any size made under the Smith

Patent, to rely on convection currents to secure these results you have been talking about?

The Court: What kind of currents?

Mr. Ely: Convection currents, merely.

Mr. Williamson: That is objected to as incompetent, irrelevant and immaterial.

The Court: I will hear you.

56 Mr. Williamson: Exception.

A. It is impossible. It has been tried repeatedly, but no one has been able to do it satisfactorily, to my knowledge.

The Court: What kind of currents are you referring to?

The Witness: Convection currents would be currents of air that are set in motion by a difference in heat. For example, the air circulating from the radiator over there, is circulating by what is known as a convection current. That is true because the air, as it is heated, rises, and the cooler air settles on the bottom, and the heat that is generated from the eggs would rise normally to the top of the incubator. There is no one that I know of that has been able to set a large mass of eggs in different stages, and keep it at the right temperature just by a convection current; it requires a forced circulation of air.

The Court: Gentlemen, I think we will stop here and adjourn until two o'clock.

(Recess taken until two o'clock p. m., November 16, 1932.)

---

57 Afternoon Session.

November 16, 1932.

(Direct Examination of Mr. Taggart resumed by Mr. Ely.)

Q. Before going ahead, I have a couple of questions in regard to the patent in suit. What does the patent have to say with regard to the speed of the air current?

A. It states first, to carry out this process, it should be of sufficient velocity to keep the temperature within the various parts of the chamber substantially uniform, but, on page two, beginning with line 73, it reads: "It is obvious that the fans can be so arranged and can be operated at such speed as to cause the hot air to circulate fast enough to keep the tem-

perature throughout the chamber between the limits of 100 degrees and 105 degrees."

Q. In regard to that temperature stated in the patent, Mr. Taggart, what is the practical effect of that?

A. That is, in regard to the temperature of the eggs?

Q. Yes.

A. Earlier in the patent, on the bottom of page one, line 47, it states: "And thereby hold the temperature of those eggs at 105 degrees or slightly below that." It is referring to the temperature of the embryo within the eggs. At the time the patent was applied for, it was considered,—100 degrees was considered the minimum, but, since that time, it has been found possible that by increasing the humidity
58 we can go on down lower than that. It is customary now, with some machines, to operate as low as 99; part of the machines on the market operate at 100; part of them at 99½, and 99¼, and some of them as low as 99.

Q. Does the size of the machine have anything to do with the operative temperature?

A. Yes. With a volume of eggs, forty to fifty thousand eggs, for some reason you can go down lower, that is, operate at lower temperature. To illustrate that, the Buckeye Incubator, with a ten thousand eggs capacity, maintains 100 or slightly below, but, as you increase the size of your incubator, you can go down a little with the temperature, that is, to increase the volume of eggs that are operated in one compartment.

Q. Is this incubator illustrated in the patent a larger or smaller machine?

A. As set up there, that would not be over eight or ten thousand eggs, if it is that much.

Q. You are, of course, familiar with the commercial Smith Incubator manufactured under the patent?

A. Yes, sir.

Q. You have some photographs illustrating that?

A. Yes, sir.

Q. How many sets of these photographs have you?

A. I have three.

Q. Where is the other one? I only find two.

59 A. There is one set with your papers.

Q. Will you see if you can find it?

(Witness procures same.)

Q. Are these photographs of the machine, such as you are going to introduce,—such as we are going to introduce in evidence?

A. Yes.

Q. Will you explain just what these photographs show?

Mr. Williamson: Just one moment. If these were taken from some machine which the plaintiff proposes to introduce, I have no objection, but, unless they are taken from a machine that they propose to introduce, I object to them as incompetent, and as calling for secondary evidence.

Q. Are they photographs of a machine which is identical with the machine which you expect to introduce?

A. There is a minor detail or two,—yes, they are the same.

60 A. The photograph that is numbered at the bottom 1476, is a front view of a Smith incubator. 1475 is a view of the same machine taken at a slight angle, that is the incubator manufactured by Smith. This machine is a little over ten feet wide, eight feet two inches high, and is thirteen feet and two or three inches long. It has a rating of forty-seven thousand eggs. The photograph that is numbered 1477 at the bottom of it, corresponds to the front view of the incubator with the front removed. This is to give you an idea of a cross section of the machine, and in order to show all the columns of trays as they are set on the side, the curtain has been pulled back to the back part of the corridor. Then the other photograph, 1478, is a view with the side of the machine taken out, and one column,—the trays on one side taken out; in other words, it shows a cross section down the corridor of the machine. In order to show the columns of trays there, the curtain was left off.

The Court: That was taken on this side (indicating)?

The Witness: Yes, sir.

Q. Which picture were you talking about?

A. That is the picture 1478. That shows the left side

61 of the corridor as shown in 1477.

Q. Does that show the eggs incubating or the tilting trays?

A. This shows twelve trays on what could be called the turning trays, or where the eggs are kept for the first eighteen days. The bottom two trays are known as the hatching trays.

Q. How are the tilting trays supported?

A. They are supported on endless chains at the front, and the rear, and the trays themselves have hardware on them, or metal hooks, so they can hook into the chains.

Q. How many fans are in this size incubator?

A. This machine has four 16 inch Robinson & Myers fans.

The Court: Where are they situated?

The Witness: They are above the center of the corridor. You can see the screen protecting the fan blades below, and if you will look in 1478, you can see them above the fan partition,—four of them.

The Court: Those fans tend to blow this?

The Witness: What you see there is a screen or a shield to protect the fan blades. The corridor there is sixty-two inches high, if I remember correctly.

The Court: Is this the corridor?

The Witness: Yes, sir, and a tall person might become entangled in the fan; in any event, the underwriters asked us to protect them. The blades are such that they throw the air downward in the corridor.

62 The Court: It comes down through those screens?

The Witness: Yes, sir.

Mr. Ely: I will offer this set of photographs in evidence as Plaintiff's Exhibit number 6, the set of four photographs of the commercial Smith incubator.

(Photographs Referred to Marked by the Reporter for the Purpose of Identification as Plaintiff's Exhibit 6, 6-A, 6-B and 6-C.)

Mr. Ely: The photograph, Plaintiff's Exhibit 6, is numbered 1475 and 6-A is 1476 and 6-B is 1477 and 6-C is 1478.

Q. Now, Mr. Taggart, you have prepared, have you not, some scale drawings of the Smith incubator?

A. Yes.

63 Q. Are these the scale drawings which you prepared?

A. Yes.

Q. Will you please just take those and briefly describe it with particular reference to the method of operation. Tell us first what the drawings are, and then go through and make such explanation as you care to.

A. The top drawing is a sectional view across the machine somewhat diagramatically, leaving out certain parts that would only confuse. The two other drawings attached to it are sectional views along the corridor and through the trays, one being in the plane SS, and the other being in the plane RR. The sectional view across the machine shows the central corridor with the trays arranged at different levels on the side of the corridor, with the hatching trays at

the bottom, with a fan at the top of the corridor to force the air downward to the bottom of the corridor, where it goes in and among the trays and the lower part of the machine, and thence upward through out and above the tray columns; thence down back into the fans and re-circulated in continuous cycles. At the top above the fan we have shown an opening there for the intake of fresh air. In the machine, —from this diagram here made we have only one fan, however,—only one intake opening above the fan,—that is through the entire incubator, and in the one we have a photograph of, there is one over each fan. On the side above the tray columns there is an opening for the exhaust of air.

The fan operates so that it forces the air down, as I
64 said before, and in order to make the air carry to the bottom of the incubator where the hatching eggs are located, we have curtains at the side of the corridor to direct sufficient air to the bottom, to pass through those trays for the purpose of keeping them from becoming too warm. Now, if we turn to the diagramatic section SS, I have represented there a section through the corridor with the four fans at the top. You will notice the position of the air intake which is in the middle of the roof. At the sides of the corridor, the shaded portion represents a curtain, and that covers the egg trays that are in the turning position. The arrows coming down from the fan represent the air movement down the corridor, and this same statement could apply to the first view we have here. Across the top of the incubator we have a number of circles with a plus sign in the center, and a figure given at the side. These circles represent the position in which we place anemometers to tell the direction and speed of the air current which is passing that point. A plus sign means that the air is flowing towards the fan, that is, flowing towards the person that is reading them, standing in this position. The minus sign would mean they were flowing in the opposite direction. The numbers give the approximate speed in lineal feet per minute. You will note there is a space there, a small space at the top and immediately behind the fan, and that represents a supporting beam. You can see that quite well in the cross section. It supports that side of the trays.
65 You can get it in this cross section here, Your Honor. The beams at each side, they support this front end of the tray, and so those readings were taken between the beams and the roof of the incubator.

Mr. Williamson: Will you speak just a little louder.

The Witness: The readings were taken between the beams and the roof of the incubator. Now, at the bottom of

the curtain, or below the curtain there is a hatching rack, and there again there are a number of circles which represent the position in which anemometers were placed. The minus sign in these circles show that the air is moving away from the observer,—I would say moving into the egg tray section. The numbers at the side of the circle again represent the approximate speed of the air in lineal feet per minute.

Q. What is the speed of the air as it comes down through the central corridor?

A. As it leaves the fan it has velocities up to as much as 1200 feet per minute; that is where it immediately leaves the fan, but, as it goes downward in the corridor, it spreads out, and this speed diminishes so that the farther away from the fan you are, the less speed that you have. It crosses underneath the trays or underneath the curtain at from 200 to 250 feet per minute. It passes underneath the hatching rack at the very bottom, at 200 to 300 feet per minute, varying at different points. It comes over the top of the beams,
66 back into the fans at a speed of approximately 700 feet per minute.

Q. What about the speed up through the columns of trays?

A. The speed through the trays themselves is so small that it is almost negligible and it is very difficult to record, but in the air space and between the columns of trays, as shown in this drawing, or as shown in RR,—it is shown in RR better—the columns of trays as they hang onto the chain in this tilted position, or operating position, they leave an air space between them and practically all the air that passes underneath the curtain goes up between the tray columns. There is a small amount of it that diffuses in between the trays, but, the big portion of it goes up the air column. The speed of it there may vary from practically nothing up to as much as 110, or perhaps 150 feet, at times, per minute.

Q. What about the length of curtains?

A. In this sketch the curtains are shown as being from five to six inches above the top of the hatching racks. They are shorter here than those shown in the patent.

Q. What has been the history of that matter of curtain length?

A. As we increase the velocity of the fans, we require less directing force and shorten the curtain. Originally the fans were much smaller and the curtains were longer. At times the curtains have been entirely omitted.

Q. Is it feasible, then, to operate the Smith incubator without the curtain?

67 A. We do not advise it, although some operators have done so, but, we do not advise it.

Q. Is there anything about the relation between the speed of the air and the presence of the curtain?

A. Yes. With curtains we can use a lower velocity air current. As you shorten the curtains, it is necessary to increase the fan volume or velocity so as to be sure that you force the air around the eggs in the most advanced stage of incubation.

Q. That is those eggs in the hatching process?

A. Yes.

Q. You are prepared to demonstrate, with the curtains removed, what happens?

A. You would still have air currents up to the egg columns in all points except in the lower part or the columns near the corridor, and there the fan current would be going down for a short distance, that is, near the bottom of the curtains, and then curving back up, but with the curtains we get a little more uniform and better distribution of the air in the back corners of the machine.

Q. That is, with what velocity of air do you get that?

A. Well, the velocity that we use at the present time and what we are using, as shown here in this picture, is 1200 feet per minute from the fan and we use a curtain that is approximately 18-½ or 19 inches from the floor of the incubator.

68 Q. What does the volume of air in motion have to do with that?

A. Well, the greater the volume that you move in in any chamber means you have to increase the average speed of it and, of course, as you increase the average speed through there, you would get uniform distribution, and if you increase it high enough, you will get uniform distribution of temperature without curtains just as well as you do with curtains.

Q. You are familiar with the Buckeye machines, are you?

A. Yes, sir.

Q. Do they have the same chain type of racks or do they have racks similar to those shown in the patent?

A. The Buckeye use racks similar to those shown in the patent.

The Court: Do you call the machine you manufacture the Buckeye?

Mr. Ely: No, we make the Smith. The Buckeye is the licensed machine.

Q. Will you just explain that to the Court?

Mr. Williamson: Is he competent?

Q. You are, aren't you?
A. Yes.

Mr. Williamson: All right.

A. The Buckeye Incubator Company, of Cleveland, Ohio, and formerly of Springfield, Ohio, manufacture incubators under the Smith patent, up to a capacity of 16,500
69 eggs. Dr. Smith reserved to himself the privilege of manufacturing them from 25,000 on up. The Buckeye has an exclusive license to manufacture under the patent.

The Court: To what?

The Witness: To 16,500.

Q. In the operation of the Buckeye machine, or rather put it this way,—I don't know whether you answered my question or not. The Buckeye machines do not use this chain type, do they?

Mr. Williamson: That is objected to as incompetent, irrelevant and immaterial, he not having shown himself to be qualified to answer.

Q. Aren't you familiar with the Buckeye machine?
A. Yes.
Q. Will you please tell me what type of hanger they use?
A. For the turning rack, the Buckeye uses a turning rack, from which the eggs are suspended, and this rack is almost identical to the one shown in the patent, in which the eggs are shown so they can be tilted from side to side.
Q. Do you know whether or not in the operation of the Buckeye machine they shift the eggs in the columns?

Mr. Williamson: That is objected to as immaterial.

A. It has been customary most of the time, although many operators do not do it. They put the eggs in a given position and leave them there until the eighteenth day, when they take them out and put them in the hatching rack.
70 In fact, the Buckeye has sold some machines in which they recommend that to be the method to follow.
Q. Are you familiar with the construction and mode of operation of the defendant's machine?
A. Yes, sir.
Q. How did you become familiar with that?
A. First, through advertising matter that was put out by Mr. Snow, and then through observation of the machines

in operation, and then later I was invited to Sleepy Eye, where we held a demonstration with one of the machines, at which time I had opportunity to take detail measurements of it and the operation was explained to me by Mr. Snow.

71 Mr. Ely: Before I go any further, I forgot to introduce that set of scale drawings, testified to by the witness, and I offer them as Plaintiff's Exhibit 7, Plaintiff's Exhibit 7-A, and Plaintiff's Exhibit 7-B.

(Documents marked Plaintiff's Exhibits 7, 7-A and 7-B, for identification by the reporter.)

Mr. Ely: Now, Plaintiff's Exhibit 7 is the sectional view across the machine, through the fan.

Plaintiff's Exhibit 7-A is the sectional view on the line "ss" of Exhibit 7.

And Plaintiff's Exhibit 7-B is the sectional view on the line "rr."

By Mr. Ely:

Q. You referred to some advertisements of Mr. Snow,—put out by Mr. Snow; are these the advertisements to which you referred, Mr. Taggart? (Documents submitted to the witness)

A. Yes, sir, they are.

Q. How did you get hold of them?

A. There was someone in the country who sent them in to us, in the mail.

Mr. Ely: (To Mr. Williamson) These are Mr. Snow's, aren't they? (Documents submitted to Mr. Williamson)

Mr. Williamson: If Your Honor please, this question and the witness' answer are objected to as incompetent, as calling for secondary evidence, it not appearing but what the machine itself could be introduced.

72 I will say that we offered to stipulate to submit our machine, if Your Honor please, and that machine is here in the Flour Exchange, and we are ready to stipulate as to that now. And we have scale drawings of that machine, and we are willing to stipulate as to those scale drawings, and we have photographs of the machine, and we are willing to stipulate as to the photographs of the machine, so that we will have before the Court the actual machine which Mr. Snow has made. It seems to me that this indirect way of

proving what we have made is all wrong; it is secondary evidence, and incompetent.

The Court: Have you looked at his proposition, that is, the drawings and photographs of the machine?

Mr. Ely: Well, Your Honor, I want to state that our visit to Sleepy Eye was the result of a motion by Mr. Williamson for particulars as to the claims in suit, and we said that we would stipulate the claims if he would let us see his machine. So he invited us down to Sleepy Eye, and we saw the machine down there. And I might state that one full day we took complete measurements of it. Now, this machine which he has here in Minneapolis is not the same machine that we saw in Sleepy Eye, and it varies in some detail. Therefore, it may be important as to some measurements and readings. The machine which we saw, that Mr. Williamson has here in Minneapolis, is not the same machine as the machine that Mr. Snow was making and put on the market. The difference is
73 that the fans are similar on this machine, but they run at a lower speed than the machine that we saw. So we propose to go ahead, with Your Honor's permission, and prove what was shown to us at Sleepy Eye in September, as the machine that Mr. Snow was using.

Mr. Williamson: The motion would have been granted, Your Honor, whether it had been opposed by Mr. Ely or not, but at his request, after he asked permission to see that machine at Sleepy Eye, we told him that that particular machine in Sleepy Eye was in the basement of the building, and that is the machine that Mr. Snow had made and used before this suit was brought; that was a steam heated machine; and at that time we showed that machine to Mr. Ely and Mr. Taggart, I did not know that it was built into the framework of the building and could not be brought to Minneapolis; I did not know that until long afterwards. And then, they had this other machine made, and the only difference between that and the machine in the basement at Sleepy Eye is that the one in the basement at Sleepy Eye was steam heated, and the one that he has now in Minneapolis is electrically heated. That is the only difference between the two machines. And that machine that is electrically heated was a knocked down machine, and therefore that was the only machine that he could bring here to Minneapolis. It is impossible, without tearing that machine all to pieces, the one that is in the basement of the building at Sleepy Eye, in order to bring it here

to Minneapolis. That is why we could not have that
74 same machine brought down here; it would be impossible to do so. And I did not know that that was the fact when we showed him that machine in the basement of the plant at Sleepy Eye. But the machine which we have got here is an exact duplicate of the four machines that Mr. Snow made and used within the jurisdiction of this Court, before this suit was brought. And this particular machine that we have got here, and are willing to stipulate to, is a machine that was made in the jurisdiction of this Court by Mr. Snow, before this suit was brought, and was used for demonstration purposes in explaining the operation of this machine to prospective customers, and the only difference between these two sets of machines is that one set, the earlier set, was steam heated, and this later set was electrically heated; and that machine is right here, and we have tested this machine here very thoroughly, under the supervision of Professor Rawley, giving notice to Mr. Ely, the counsel for the plaintiff, and we are prepared to put these tests in, and to take you down and let you see the machine in operation. Now, that is the machine that we ought to have here, and I am willing to stipulate to that. Now, this going way around, by showing advertisements, and so forth, of our machine, I submit that that is incompetent testimony; it is secondary evidence, when we have got the machine where you could see it.

The Court: Well, of course, if this testimony is competent, he has a right to make use of it. But, if you have
75 other evidence which is competent, that should be shown. I think if the testimony shows that they went down there, and you showed him your machine,—

Mr. Williamson: (interrupting) That was done at their request, out of courtesy to them. We are perfectly willing that they should put in whatever tests were made of the machine there, but we are not willing to have them put in a machine which they have made, and call it our machine.

The Court: Well, they have the right to describe the machine that they saw.

Mr. Williamson: Yes, the machine that they saw.

Mr. Ely: Well, do I understand the status of this is,—I offer these advertisements in evidence.

Mr. Williamson: I object to these as incompetent, and calling for secondary evidence.

The Court: You are admitting that they are your advertisements, are you?

(Documents submitted to Mr. Snow by Mr. Williamson.)

Mr. Williamson: The defendant admits that this particular sheet which I have now in my hand, was issued by him, and contains a cut, taken from a photograph of his steam heated machine.

These others do not contain any cuts of the machine.

Mr. Ely: This is all a part of one advertisement.

Mr. Williamson: And this other piece that I hold
76 in my hand now, shows an exterior perspective view of one of his steam heated machines.

The Court: They may be admitted in evidence.

Mr. Williamson: But it is impossible for us to have that machine here. We have drawings of the machine, and we have photographs of the machine, which we will stipulate to. We have photographs of the very machine which is in the basement of the plant at Sleepy Eye, which we will submit in the case, if you want to use them.

By Mr. Ely:

Q. Mr. Taggart, while we are right on that subject, when we were at Sleepy Eye, did you take measurements of that machine that was shown to us at that time?

A. Yes, sir.

Q. And you recall that machine was shown to us as the machine that Mr. Snow was building at that time, is that right?

Mr. Williamson: I object to that as leading.

The Court: Don't lead the witness.

Mr. Ely: If Your Honor please, I will make a statement, then, that that machine was shown to us as the machine which Mr. Snow was operating,—was shown to us on September 29, 1931, after the bill of complaint was filed, so that we might designate the claims which were in suit, and Mr. Taggart and I went down there to see that machine, and examined it, and measured it, and that is the machine on the basis of which we went ahead with our suit.

By Mr. Ely:

Q. Now, Mr. Taggart, you saw this machine that is
77 over in the Flour Exchange the other day, did you not?

By Mr. Ely:

Q. And you took measurements of that machine, did you not? A. Yes, sir.

Q. Did you find any difference between that machine in the Flour Exchange, and the one that we saw at Sleepy Eye?

A. Quite a number of differences.

Q. What were the principal differences?

A. In the first place, the fans were fifteen per cent smaller, that is, approximately fifteen per cent smaller.

By the Court:

Q. In which machine?

A. In the machine shown here in the Flour Exchange. Their average rate of speed was five per cent less than the average rate of speed of the machine shown at Sleepy Eye; they were fifteen per cent smaller, and rotating five per cent less.

There was a difference in the hatching rack, in the space underneath the hatching trays; as shown to us in Sleepy Eye, it was four and one-half inches, and in the machine in the Flour Exchange, it has been increased to seven inches.

78 The machine shown us at Sleepy Eye was seven feet seven inches high, and the one shown down here is five inches lower. This machine is a little wider, and the corridor is four inches narrower, and it is about four inches longer.

The tray arrangement,—the trays as they hang on the columns are spaced three-eighths of an inch farther apart; that is, the columns of trays, twelve on a side of the incubator, the same as we have; they down there were spaced three-eighths of an inch closer together than they are in this machine here.

Q. What about the space between the ends of the sides of the trays and the side walls or end walls of the machine?

A. They are a trifle closer in that machine, that is, the end tray column,—

By the Court

Q. (interrupting) In what machine?

A. The end tray columns that go in the machine here in the Flour Exchange were a trifle closer to the front and rear wall, than the machine at Sleepy Eye. The wall at the back of the tray columns, that which would be the sides of the incubator, they were two inches farther out.

These differences make certain differences in the speed and the velocity and direction of air flow in the machine.

By Mr. Ely:

Q. And the difference in the diameter of the four fans is—what?

79 A. The fans shown us at Sleepy Eye were five feet in diameter. The fans shown down here are fifty-six inches in diameter, or four inches less in diameter, which amounts to approximately fifteen per cent less in area.

By Mr. Ely:

Q. And what was the speed of the four fans in the Sleepy Eye machine?

A. The average speed in the Sleepy Eye machine was 211 RPM.

Q. And were the speed of the four fans approximately the same throughout the machine?

A. Yes, sir; they varied from 208 to 217 RPM.

Q. Now, what about the speeds of the four fans in this machine down at the Flour Exchange?

A. In the machine down here, they varied from 180 some to 220 some,—I have forgotten the exact numbers, but the average speed was only 201 RPM.

Q. And one fan was running much faster than the other, was it not? A. Yes, sir.

Q. Now, do you recall me asking Mr. Snow whether he had ever operated that machine that was down in the Flour Exchange?

80 A. Yes, sir.

Q. And what did he state?

A. He stated that it had never been operated.

Mr. Ely: Now, if Your Honor please, what we propose to do is this: We built a machine back in Cleveland, after we came back from Sleepy Eye, in exact accordance with the dimensions of the machine that was shown us, and that is the machine on which we have prepared our case, and we have that machine here, and it is an exact duplicate of the machine which was shown us in Sleepy Eye, and this machine here is not. So, with Your Honor's permission, we propose to go ahead, to prove up that machine.

Mr. Williamson: If Your Honor please, we object to that machine on the ground that that is a machine that was not made by the defendant; it is a machine which they have made, —which the plaintiff here has made. We have never been permitted to see it; we have never been permitted to make any tests of it, and we don't know whether it is a correct re-

production of our machine or not. If they wanted to introduce it as the plaintiff's model of the defendant's machine, that would be one thing, but to introduce it as our machine, we certainly object to that. It was never made by the defendant in the jurisdiction of this court. And we offer to produce here photographs of the Sleepy Eye machine. Of course, we have no objection to their introducing evidence of what they saw there at Sleepy Eye, at the time that they came
81 there to look at it. We will furnish them photographs of that machine, and they can put in testimony as to the tests made, and we will put in testimony of our tests, but the machine that we have got here is exactly like the machine which Mr. Snow did make and market in the jurisdiction of this court, before this suit was brought, and this particular machine was made in this jurisdiction before the suit was brought. The machine is standing up there for demonstration purposes to prospective purchasers. And there has been, I understand it, some of the identical parts that were on the machine in the basement of the plant at Sleepy Eye,—the motors and the pulleys, and everything of that type, were taken off of the Sleepy Eye machine and put on to this machine, so as to have it identical. It is our machine the way we market it. The four other machines, besides this one that is here in the Flour Exchange, were made and put into use before this suit was brought.

Now, of course, we have no objection to their putting in testimony as to what they saw at Sleepy Eye. They saw one of our machines. We could not bring that machine down here, because it was built into the building, but we will furnish them photographs of the machine, that were taken when it was in use, if they want to have them.

But we propose to put in this machine that we have got at the Flour Exchange, and we propose to put in scale drawings of that machine, and photographs of that machine, and
82 that is the machine that we marketed,—that is the machine that we marketed. Now, we don't care to be bound with this machine that they propose to put in, because they made it; we have not seen it; we don't know whether it is a correct reproduction of our machine or not. If it is put in, it ought to go in simply as the plaintiff's model of the Sleepy Eye machine.

The Court: Of course, they could not put it in as anything else but plaintiff's model.

Mr. Williamson: With that understanding, I will permit it to go in.

The Court: As plaintiff's model of your machine.

Mr. Williamson: Yes, as plaintiff's model of our machine. Now, I have not seen it, Your Honor, and I reserve the right to object to it, after I have seen it. But these advertisements at this time,—are we waiting for them? Do you want our photographs or not?

Mr. Ely: Well, his Honor has admitted these advertisements, as I understand it. Have you admitted these in evidence, Your Honor?

The Court: I have admitted them, yes.

Mr. Williamson: Exception.

Mr. Williamson: There is some evidence as to them that I want to put in.

Do you want the photographs of the Sleepy Eye machine?

Mr. Ely: We will go ahead and prove our machine,
83 Mr. Williamson.

I ask to have these documents marked as Plaintiff's exhibits.

(Documents marked Plaintiff's Exhibits 8, 8-A and 8-B, for identification by the reporter.)

By Mr. Ely:

Q. Mr. Taggart, when did your company first learn about the infringement of the machine complained of?

A. Three years ago.

Q. Did you make an attempt to buy an exact machine on the market? A. Yes, sir.

Q. How far along did you get with those negotiations?

A. We at one time had five hundred dollars paid, and a contract signed by one or our men, and accepted by Mr. Snow, but after he had accepted the money,—

Q. (interrupting) After he had accepted the money?

A. Yes, after he had accepted the money, he sent the contract back, and sent the check back.

Q. So you were not able to obtain a Snow machine on the market, is that correct?

84 A. No, sir, we tried repeatedly.

Mr. Ely: It seems to me that this is very material.

The Court: Well, I suppose one reason for offering these in evidence is to excuse the fact that they are offering some other model, instead of one of your machines?

Mr. Ely: That is exactly it.

Mr. Ely: We offer in evidence the purchase contract, as Plaintiff's Exhibit 9.

(Document marked Plaintiff's Exhibit 9 for identification by the reporter.)

Mr. Williamson: The same objection.

The Court: The objection is overruled.

Mr. Williamson: Exception.

By Mr. Ely:

Q. After you came back from Sleepy Eye in September, what did you do about building a machine?

A. Oh, we first tried again to purchase a machine. We tried to get admission into some of Mr. Snow's plants, so that we could make tests on one of his machines, but found that he had given instructions for us to stay out, and we then built a machine as near in conformity to the machine that we had been shown, as we could.

Q. And that machine has been built, has it? A. Yes, sir.

Q. And you have made extensive tests on that machine?

A. Yes, sir, it was built under my instructions and in conformity with my dimensions and drawings, and I have run extensive tests with it; I have tested it from a number of

85 different angles.

Q. And that machine is now in Minneapolis, is it not?

A. Yes, sir.

Q. And do you have photographs of that machine?

A. Yes, sir.

Mr. Williamson: We repeat our objection to these photographs, if Your Honor please, and any tests of that machine. We were not invited to be present at those tests. There is no weight to ex parte tests. It has been held by our courts that there is no weight to such evidence unless counsel for both sides are present. It has been held to be of no weight in patent suits; such tests must be taken in the presence of counsel for both sides.

The Court: Well, that is very true, but in this case they are offering these because of the claim in this testimony that they were unable to procure one of your machines and bring it into court.

Mr. Williamson: At least local counsel have indicated that they were willing to stipulate as to a machine for use in the trial of this case.

The Court: Well, I think it is admissible.

Mr. Williamson: Exception.

Mr. Ralph E. Williamson: If Your Honor please, there is one thing that probably should be called to Your Honor's attention, in connection with the tests, and that is that we noticed the tests of our machine, on the Snow machine
86 that is here at the Corn Exchange in Minneapolis, and that counsel for the plaintiff and his expert, Mr. Taggart, appeared at those tests.

Mr. Ely: I object at this time to the tests, because the mechines were different.

Q. (By Mr. Ely) Now, Mr. Taggart, will you take those four photographs that I have handed you, of the plaintiff's model of the Snow machine, and will you explain what they are?

Mr. Williamson: I object to the question as grossly leading. If he will ask him if these are photographs of the plaintiff's machine, I will have no objection to the question.

By Mr. Ely:

Q. Well, are these photographs of the plaintiff's machine?

A. These are photographs of the model which we built in conformity to the information that was given us at Sleepy Eye.

Q. Will you go ahead and state what they are, and will you make such comparisons as you wish to make, with the photographs of the Smith machine, those that have been offered in evidence?

A. Photograph Number 1475 is a photograph of the machine from the front,—

Q. (By the Court—interrupting) You are talking about —what?

A. Number 1472; I beg your pardon. Number 1471 is
87 a photograph taken of the same machine at an angle. Number 1473 is a photograph of the same machine with the front entirely removed. And photograph Number 1474 is a photograph of the same machine,—the side of the corridor.

These photographs were taken under my instructions from the same angles, and the same distance away, as the four photographs that I showed, or that were introduced of the Smith machine.

Q. (By Mr. Ely) Do you find any points of similarity that you want to call His Honor's attention to between those two photographs?

(Previous question read by the reporter.)

By Mr. Ely:

Q. Those two sets of photographs, the set of the Snow machine, of the model, and the set of the Smith machine?

A. In photograph 1473 of the Snow machine, which is a photograph with the front removed, compares with photograph 14,—

The Court: (interrupting) Just a moment until I get that,—all right,—no, I have 1478.

A. 1473 and 1477.

By Mr. Ely:

Q. Now, which is which, Mr. Taggart?

A. 1473 is a photograph of the Snow model which we [conducted] and 1477 is a photograph of our machine.

Q. Now, the Smith machine?

A. The Smith machine is taken from the same dis-
88 tance and the same angle. The trays in the two machines are almost identical. The length of the trays are exactly the same length. The tray in the Smith machine is three-sixteenths of an inch narrower. The same number of trays are used in the turning racks, and they are spaced with the same distance apart, to the one-sixteenth of an inch, as the twelve trays which hang in the turning rack.

The trays that are in the hatching racks, the air space underneath the bottom most tray in the Snow machine, or in the model of the Snow machine, Number 1473, is one inch higher than in the Smith machine.

The two trays in the hatching racks are spaced on four and one-half inch centers,—the same in both of them.

The width of the hatching rack partitions, those that I refer to,—these hatching racks, are made up of sheet iron, as I have photograph Number 1458 here (indicating); we have others of those that we can use. That shows what I mean by the partitions here, hatching racks (indicating). Those are on the same centers. That particular one is a picture of the hatching rack (indicating), that was constructed for the Snow model.

The inside height of these machines are within a half inch of each other, the Snow machine being a half inch taller on the inside dimensions than the Smith machine.

As to the length of the two machines, the Snow machine is slightly longer.

89 Q. How Much?

The Court: By the length, you mean this way (indicating?

A. Yes, sir, the length of the corridor. It is about two and one-half inches,—I have forgotten the exact dimensions on that. But on the sides of the corridor, as shown in photographs 1474 and 1478, 1474 being the one to the left of you, Your Honor (indicating),—1478 is the sides of the Smith machine,—the side of the corridor, and Number 1474 is the side of the Snow model.

There are exactly the same number of trays hanging in the chains in each column. They are spaced exactly the same distance apart. There are the same number of columns. The spacing is approximately three-eighths of an inch different.

In both of them, the heating coils and cooling coils are in the space above the corridor.

In both of them, there are the beams at the side of the corridor for the support of the trays. While both of them are supported on the corridor side by chains, that is, the trays are supported by chains, the type of the chain is the same, or almost identical, but the method of supporting them is different.

In the Snow machine, or the Snow model, as shown in Number 1473 (indicating), the fans are on the side wall behind the column of trays. You can just see the tips of them there (indicating). I have the picture showing that.

90 Mr. Ely: Yes. All right.

A. There are two fans on each side of the incubator, behind the trays. These fans were five feet in diameter; each of them had four blades, and these blades were four inches wide, and they were set at an angle of forty-five degrees. You can just see the tips of them sticking out behind the tray [tray] columns in Number 1473 (indicating).

The Court: They are over next to the wall?

A. Yes, sir; there are two on each side wall.

By Mr. Ely:

Q. There are four fans in the incubator?
A. Yes, sir.
Q. And how many fans in the Smith machine?
A. Four fans.

Q. Go ahead with anything else that you wish to, Mr. Taggart.

A. And in the Smith machine the fans are in the top of the corridor, and there are curtains arranged at each side of the corridor, to direct the air to the eggs in the bottom most tray.

By the Court:

Q. In your machine, that is, the Smith machine, the fans are up here (indicating)? A. Yes, sir.

Q. And in this Snow machine, they are over on the side next to the wall, is that right? A. Yes, sir.

By Mr. Ely:

Q. What about the opening for the interchange of air
91 from the inside to the outside, and where are they located with respect to the fans in each machine?

A. In the Snow machine, as shown in photograph Number 1460, there are holes in the wall, immediately behind the fan. You have the picture upside down, Your Honor (indicating).

By the Court:

Q. These holes (indicating)?

A. Yes, sir, only there are three above each fan center, and five below, as shown here (indicating).

These holes were in the machine, as shown to us by Mr. Snow, but he advised us that he had been operating with the bottom row of five holes closed.

Q. Do these holes go into the,—

A. (interrupting) They go through the rear wall, or they go through the side wall of the incubator, to the outside.

By Mr. Ely:

Q. And what are they for?

A. They are for the purpose of intake of fresh air. If Your Honor will just refer to Number 1471, you will find it on this side here (indicating). You will notice at the side of the incubator, that there is a motor and two pulleys, with belts attached, so that the motor with the pulleys and belt arrangement were for driving the fans inside.

The box like arrangement immediately above the holes, covers the intake holes, that is, the upper intake holes, which Mr. Snow was using; that is, the air entered the ends of this box like arrangement on the side, and then into the
92 incubator through these holes back of the fans.

The bottom holes, which are shown there at the level of the motor, were not used by Mr. Snow. They were a part

of the incubator, but he had them closed at the time we had our demonstration at Sleepy Eye.

By the Court:

Q. You refer to these here (indicating)? A. Yes, sir.

By Mr. Ely:

Q. Now, what is the relationship of the holes with respect to the fans in the Smith machine, and the holes for the inlet air with respect to the fans in the Snow machine?

A. In both cases, they are immediately behind the fans.

Q. Now, will you point out this restrictive outlet opening in the Snow machine?

A. In the Snow machine, there are two outlet openings in the ceiling immediately above the corridors. They are seven inches in diameter. These openings were restricted by a damper, or a slide, with which you could close them. In these pictures, that slide does not appear.

Q. What is the relative area of the inlet and outlet openings in the Snow machine and in the Smith machine?

A. They are practically the same.

Q. Now, will you be a litte more definite on that?

Mr. Williamson: That is grossly leading, if your Honor please, and I object to that question on that ground.

The Court: Well, I cannot see that it is leading.
93 It does not seem to be leading. The objection is overruled.

Mr. Williamson: Exception.

A. In the roof of the Snow model, there are two outlet openings that are seven inches in diameter. In the side walls of the Snow machine, as shown to us in operation, there were twelve 2 inch openings.

Q. You mean inlets?

A. For the inlet of air; although there were twenty holes in the machine that had been restricted or closed, the sum total of the outlet openings in the Smith machine, and the outlet openings in the Snow machine, are almost the same; that is, the total area of the restricted openings in the two machines are almost the same.

Q. Well, just what difference is there, approximately?

A. I cannot give that to you without doing a little figuring; for example, there are two 7 inch diameter openings in the Snow machines, and in the Smith machine, as it was originally constructed, there were four openings of 6½ inch diameter, but four years ago that was reduced to six open-

ings, 4 inches in diameter. There is a very close similarity to them as they are arranged, and particularly since they are or can be dampered or restricted, you could make them exactly the same.

Q. The difference is merely a fractional difference of an inch or so?

A. Yes, sir, in the matter of the adjustment of the operator.

94 Q. Now, are there any other similarities in construction that you want to point out?

A. (No answer.)

Q. Any other identity of arrangement other than you have already referred to?

A. There are a number of little details that are similar, even to the manner in which it is painted, and the way the trim is put on, the type of instrument that is used for controlling the temperature.

Q. With what color do you paint your incubator?

A. Mahogany.

Q. And what color does the defendant paint his?

A. Mahogany stained.

Q. Now, what about the arrangement of the eggs? Did Mr. Snow tell you how he arranged the eggs in that machine?

Mr. Williamson: That is objected to as hearsay.

The Court: It is hardly hearsay, if it were told to him by Mr. Snow.

Mr. Williamson: Exception.

By Mr. Ely:

Q. Well, did he tell you how he arranged them?

A. Yes, sir.

Q. What did he tell you?

A. In traying his eggs, he places the eggs on the little end in the tray, and stacked them in there, or arranged them in the trays so that the eggs would be standing on the

95 little end. Then when they were placed into the incubator, he would turn them into the columns, to an angle, the same as we turn them in the Smith machine, so that the egg arrangement from that manner was identical.

Now, the type of equipment that Mr. Snow has here for supporting these trays are such that the trays cannot be lowered but a trifle, that is, they cannot be successfully lowered, and they are placed in a given position, and left

there until the end of the eighteenth day, when they are taken out and put into the hatching rack.

Mr. Snow took pains in setting, to sandwich his eggs at different stages of incubation; for example, it is customary in the Smith machine, and also in Mr. Snow's machine, to set two trays in each column at a time. There is only space for hatching two trays at a time; so he would only set two trays in each column, and in setting these, he would put one tray at a given position, and the other tray, three or four trays from it, in the same column. Then, when he would set the next time, he would have trays placed in corresponding position, so that no two trays in the same column, touching each other or adjoining each other, would be of the same eggs; in other words, the eggs of different settings of incubation are sandwiched throughout the eggs on the turning rack, so that when they get down in the hatching rack, then the trays are both of the same age of incubation.

Q. That is to say, during the progression of incuba-
96 tion in the Snow machine, how are the eggs arranged with respect to old eggs, say, and new eggs?

A. There might be an eighteen day old egg on the bottom tray, and a three day tray immediately above it, and a ten day tray above that. There were no two trays of the same age together; they were sandwiched throughout.

Q. And what result do you get from this sandwiching there?

A. It operates in equalizing the temperature. In this big reservoir of heat, the eggs are heated by the method of sandwiching in between the eggs that need heat.

Q. Now, we will look at that photograph of yours, of the fans on the back,—will you call attention to which one that is, please? A. It is photograph Number 1460.

Q. Did you ever see fans like that in an incubator before?

Mr. Williamson: That is objected to as immaterial.

A. Yes, sir.

Q. Who used fans similar to that?

A. The Robbins Incubator,—

Mr. Williamson: (Interrupting) That is objected to as immaterial. I don't see what that has to do with the issues in this case.

The Court: Well, I can hardly see at this point, as to whether it is or is not material.

Mr. Ely: Well, it is material because these fans are an exact copy of the fans that were used by Robbins, and
97 it has been held to be an infringement out in California.

Mr. Williamson: I think that is a long way off, and unless you have the record in that case here, you cannot make a comparison, Your Honor; and, Your Honor, that is not set up in the pleadings.

The Court: Well, if I can be convinced that that is the same,—they will have to show me. The objection is overruled.

Mr. Williamson: Exception.

Mr. Williamson: It seems to me it is immaterial.

The Court: I will not prohibit them to find out, to the extent of what it shows.

By Mr. Ely:

Q. Compare those fans with the fans that were used in the Robbins machine.

Mr. Williamson: The same objection.

The Court: Objection overruled.

Mr. Williamson: Exception.

A. I have here a catalogue put out by the Robbins Incubator Company at Denver, Colorado, and on page eleven of this catalogue it shows a model of one of their incubators, with the trays removed, and the framework for the trays still in there, and on the back wall of this catalogue, or on this cut, it shows two fans. These fans are again shown on page twelve. This page twelve is a diagrammatic view of the fan as shown by the manufacturer Robbins. You will note there the motor and pulleys and the blades of the fan
98 (indicating). Now, those blades are on the inside of the incubator; the pulleys, belt and motors are on the outside of the incubator. You will observe these blades on the rear wall of page eleven. That is just back from where you are, Your Honor (indicating). They show on the rear wall there (indicating). These blades, or these fans, as put out by Robbins, and as exhibited and made a part of the evidence in the California case, which they refer to, are five feet in diameter; they have a four inch blade; the pitch of the blade is approximately forty-five degrees, and compare with the blades shown us at Sleepy Eye, in practically every detail.

Q. What about the speed of rotation of the fans?

A. The speed of rotation at Sleepy Eye was an average of 211. Those in the Robbins case, or in the Robbins machine, they recommend that they operate them from 200 to 220, and in a test made in the California case, they ran at 212.

Q. And is that machine that is shown in this photograph, and this catalogue, is that the same machine that was in California?

A. Yes, sir.

Mr. Williamson: The same objection.

The Court: The objection is overruled.

Mr. Ely: I will offer in evidence,—wait a minute, before I offer them in evidence, I had better offer these photographs.

I wish to offer the photograph of plaintiffs' model of defendant's machine in evidence.

99 By Mr. Ely:

Q. Now, you had better tell us what those are.

The Court: They have not been marked.

Mr. Ely: Yes; we are liable to get them mixed up here.

A. 1472 is the front,—

Mr. Williamson (interrupting): There is no question before the witness.

The Court: We are just getting these photographs marked.

Mr. Williamson: There is no question before the witness.

The Court: No, he is explaining the pictures.

By Mr. Ely:

Q. All right, Number 1472.

A. That is a front view of the Snow model.

Q. That will be Plaintiff's Exhibit 10.

(Document marked Plaintiff's Exhibit 10 for identification by the reporter.)

A. Number 1471 is an angle view of the same machine.

By Mr. Ely:

Q. And that will be Plaintiff's Exhibit 10-A.

(Document marked Plaintiff's Exhibit 10-A for identification by the reporter.)

A. Number 1473 is a view of the Snow model with the front removed.

By Mr. Ely:

Q. That will be Plaintiff's Exhibit 10-B.

(Document marked Plaintiff's Exhibit 10-B for identification by the reporter.)

100 A. Number 1474 is the side of the corridor of the Snow model.

By Mr. Ely:

Q. That will be Plaintiff's Exhibit 10-C.

(Document marked Plaintiff's Exhibit 10-C for identification by the reporter.)

A. Number 1460 is the side of the Snow incubator or model, with the trays taken out, so as to show the sides.

By Mr. Ely:

Q. That will be Plaintiff's Exhibit 10-D.

(Document marked Plaintiff's Exhibit 10-D for identification by the reporter.)

A. Number 1458 is a detailed view of the hatching rack of the Snow model.

By Mr. Ely:

Q. That will be Plaintiff's Exhibit 10-E.

(Document marked Plaintiff's Exhibit 10-E for identification by the reporter.)

Mr. Ely: I offer these photographs of the plaintiff's model of the defendant's machine in evidence.

Mr. Williamson: We object to these photographs as incompetent, calling for secondary evidence, and is also immaterial to any issue in this case.

The Court: You don't offer any of these photographs, do you, these others; some of them are not marked?

The Witness: That is a different machine, Your Honor.

Mr. Ely: Yes, that is a different machine.

The Court: Oh, yes.

The Court: The objection will be overruled.

Mr. Williamson: Exception.

Mr. Ely: I offer as Defendant's Exhibit 11, the photograph of the Robbins machine, held to be an infringement in the California litigation.

101

Mr. Williamson: Now, if Your Honor please, I certainly object to them as incompetent and immaterial. It is not the best evidence. The litigation in that suit is not set up in the bill of complaint. The record is not here, and is not introduced in evidence. And if that kind of evidence is admissible here from that suit, we will have to put in similar evidence as to all of these other suits, where the courts have held that there would be no infringement.

The Court: Well, I believe the reason that they are offering these is because the witness has testified that these fans are similar to your fans.

Mr. Ely: Yes; we have the same thing there, Your Honor.

Mr. Williamson: They have not proved that they were in existence before ours, or anything of that kind. I don't see on what point they can possibly be material.

The Court: Well, if the Court has considered that, and shown what they thought of it, they may have some bearing here; I don't know.

Mr. Williamson: Then, if Your Honor please, we would need the whole record in that case, to determine as to whether it is pertinent or not.

The Court: Well, the objection is overruled.

102

Mr. Williamson: Exception.

By Mr. Ely:

Q. Now Mr. Taggart, did you prepare some scale drawings of this model of the Snow machine?

A. Yes, sir,

Q. Showing the air currents?

A. Yes, sir.

(Document marked Plaintiff's Exhibit 11 for identification by the reporter.)

103

Q. Let me ask you first, those drawings were prepared by you, were they? A. Yes, sir.

Q. Do they correctly illustrate the model that you made?

A. They do.

Q. And how closely do they follow the machine you saw at Sleepy Eye?

A. The inside dimensions, and all dimensions are as nearly related as we can make.

Q. Now will you go ahead.

Mr. Williamson: We object to any testimony of these drawings, especially as they are marked with arrows, supposed to show air circulation. We have not been invited to see any model of that machine. We don't know whether it is really ours or not. It is purely ex parte. It is certainly improper to introduce these illustrations of that machine without giving us a chance to make tests of it and so forth.

The Court: That is the main question I have ruled on before. The objection is overruled.

Mr. Williamson: Exception.

Q. Now will you go ahead, Mr. Taggart, please.

A. The front or first sheet here is—represents a sectional view across the machine approximately three feet from the front. In this diagramatic section we have left out
104 some unimportant details because it would only tend to confuse. We have the twelve trays in what would represent the turning position, and the two hatching trays at the bottom. We have the fans on each side behind the columns of trays. The air inlets are in the side walls at the rear of the fans. The exhaust is in the ceiling immediately above the corridor. The black marks on each side of the corridor near the top represent the beams which are there to support the front of the trays and the horizontal marks there represent pans that were in there for the purpose of catching condensation of the steam coils and cooling coils that were in the machine. Now in studying this machine I relied on anemometers,—paper ribbons and smoke for determining the direction of the air currents, and then I relied on anemometers, for the purpose of determining the appropriate speed, the lineal feet per minute. With a fan of this type, rotating counter clock-wise as shown on the sheet AA, as I have it, that would be the next sheet that is taken in the plane AA of the first sheet which would be through the fan on the left hand side. Plane AA, through there to the second sheet, shows the fans in AA or would correspond to the photograph which you saw of the fans a while ago. Now the fans were turning counter-clockwise at a speed of 208 to 210 R. P. M.

The Court: You mean by that one turning one way and one the other?

The Witness: No, they were both turning counter-clockwise. Instead of turning to the right, that would be the same

as a clock, they both turned to the left at the top,
105 or counter-clockwise. They were both turning the same way. Now this type of a fan, with the blade set at an angle of 45 degrees, your first thought would be that that would throw the air, push the air out forward. They would if they were placed out in the open, but as they are placed here, within an inch and a half of the wall, they cannot feed from behind. That is no air can get to them from behind, so in their operation they throw the air off centrifugally. As they go around they throw it off centrifugally and we find that the arrows here around the outside of the fans show the direction of the air as it is thrown off from the fans. Now, throwing the air off there, the fan must feed. That is, no fan can throw air unless it feeds from some place and these fans feed almost entirely from the front. That is the air flows into them in the front, flows into them, is thrown out centrifugally from the fans.

The Court: Thrown into them from the inside of the—

The Witness: From among the trays, as you would see in turning back to the—

The Court: From these trays?

The Witness: Yes, sir. It is drawn in over the trays into the fan and then thrown out centrifugally. Now they have a tendency to follow a straight line or a tangent as they are thrown off, but they come in contact with the ceiling, floor and side walls. These walls bend the currents
106 toward the front. There is only one way that they can go, so they flow out towards the corridor, as is shown in the first page. Along the ceiling there is an outward movement; along the floor there is an outward movement. There is also an outward movement along the side walls. Just the opposite way from the way you showed me.

The Court: Yes, I see.

The Witness: Now, in making this study, I have made accurate studies of each of the planes as shown here, that is AA, BB, CC, DD and then, running across the other way in the plane EE, at the top, and then FF, GG, HH, JJ, and KK. In other words I have tested the air movements in each of those planes and the results of those tests are in the attached drawings.

Q. What do the figures by the arrows mean, Mr. Taggart?
A. The figures by the arrows show the approximate speed in lineal feet per minute of the air currents at that point as

recorded by a Biram anemometer. The anemometers that I used in practically all this work were of the three inch Biram anemometers that are accurate, are approximately accurate at 500 feet per minute. As they are placed in an air current they record by a dial here, the speed. I would use a stop watch on them and get the speed per minute. In a large portion of readings here I relied on one-half minute readings after they were in operation. I might say t at in this work I made considerably over 1500 anemometer readings.

107 Now these anemometers don't—all they record, general direction, and when studied and worked with you can get the exact direction and you can also get the approximate speed in lineal feet. There is a slight correction for these on lower speeds, and a correction on higher speeds also, but this is from only—only varies from zero up to 40 feet per minute. And in making these tests I did not bother to make the correction, so the speeds as recorded here are the approximate speeds without the corrections that are necessary to get the accurate speeds.

Now if you will turn to sheet BB, which would be the third sheet, you will note there a view or a sectional view of the side of the corridor and you have the trays, the position of the trays. You have the position of the fans. Now each of those circles represent a place in which the anemometer was put in making these studies. The minus sign means that the air is flowing away from the fans or is being impelled outward by the fans. The plus signs mean that the air is moving in towards the fans. If there is a plus and a minus joined in the circle, as there are in a few places, it means that when the anemometer is placed in that position it does not run steadily in one direction, it may reverse itself or it may not even run at all. The numbers by the sides of these anemometer locations give the approximate speed per minute, as recorded by the anemometer. Now in this section BB, the anemometers were all placed in the plane of the fan and approximately six inches in front of the fans. There is
108 a slight correction to that statement, all placed in the plane of the fans and that is explained in the footnote below. The twelve readings across the top were placed—the anemometer was placed at right angles to the direction of the flow of the air as shown by ribbons. Now, if you will notice that near the eye of the fans the speed of the air going into the fan is from 700 to 800 feet per minute. I noticed one reading here now of 830 feet per minute. Now as you get out further from the eye of the fan the speed of the air flow-

ing into the fan is not quite so strong. Around the top you will notice that those are all minus readings. Along the side walls, these would be the front, the extreme left and the extreme right of the drawing, they are all minus which means that the air is coming out, the fan is throwing the air out centrifugally and it is striking the roof and the side walls and floor and is curving out towards the front. Along the floor you will notice that, with four exceptions, I believe it is four, all of those readings show that the air is coming outward from the fans. Now this reading was repeated or this test was repeated in CC, which is the middle of the trays. It was also repeated in DD, which was at the front of the trays within approximately three inches from the front edge of the trays. It was not right out in the corridor, but about three inches from the front of the trays. Now, to make—if you will notice along the top of DD, reading from the left,
there are two minus and plus and a minus, and then
109 there is a series of pluses, another plus and minus, and
then the others are minus. Now all the minuses are coming from the—the air is coming from the fans to the back of our view here. The pluses are coming from the fans that are on the opposite side of the corridor. At that point the current is carrying from the opposite fans across the corridor and into this tray section.

Now, if you will refer to EE, you will have a diagramatic view of the top of the incubator as though you were looking at it through the roof. If you will remember, we stated the fans were rotating counter-clockwise. In other words in the upper right hand corner the air would be coming up—would be forced up there at a strong speed due to the fact that the fan was turning counter-clockwise. That is in the upper right hand corner.

The Court: Here.

The Witness: Yes. Now that causes a strong current of air to travel out from that corner in the direction as shown by the arrows there. The current, as it leaves the fan section, has a speed of as much as a thousand feet per minute, and that current carries past the center—well past the center of the machine. Now, we have a corresponding thing or situation in the lower left hand corner. The arrows here show the general direction and the approximate speed of the air as thrown by the fans on the roof of the incubator. This air
that comes out, of course must all turn back and go to-
110 wards the fans to be re-circulated in another cycle.
That diagram is exactly the same or almost exactly the same on the two sides of the corridor.

Now in Section FF, which is a horizontal section through the second tray from the top, this is not through the eye of the fan, but it is the condition that I found existing in the second tray from the top. You have—in GG you have the fifth tray from the top. In HH you have the eighth tray from the top, or which is directly through the eye of the fan. Please notice that in those that the air is moving towards the fan, in the trays that are immediately in front of them. Along the two side walls they are moving out, the air is moving out and in the center of the machine by the—in the center column there, the air is moving out. Now the air moves out for a space, turns and goes back towards the fan again, but it flows in continuous cycles and keeps the same speed and the same general direction day in and day out. Now we have the same thing in the line plane JJ, which is the eleventh tray from the top. On the figure KK we have what exists on the floor of the incubator underneath the hatching rack. Those parallel straight lines that lead out from the fans are the metal partitions or dividers between the different hatching trays that support the trays. You will note that they deflect the air current. The air starts out in a certain direction but they turn it. Now this is the condition that exists in the machine constructed after the dimensions of the one at
111 Sleepy Eye.

Q. Now, Mr. Taggart, did you find in the Snow incubator distinct currents of air?

A. Yes, sir.

Q. Did you find—

Mr. Williamson: Object to this as grossly leading, Your Honor, putting right into his mouth what he wants him to say yes to.

The Court: I suppose that is leading.

Mr. Ely: All right.

Q. What is the character of the air current that you find or the current movement of air that you find in the Snow machine?

A. There are direct air currents in practically all of the machines. In the corridor there are numerous places where the air is not in definite form because it becomes a mixing chamber where the air currents come in from the ends and from the top and from the bottom. There there is a curving or mixing before it is drawn back through the trays again and in the corridor you can't say that it is a definite current, but through the egg trays themselves, around the

egg trays and through the air spaces between the egg trays there are definite, definable currents.

Q. Now, Mr. Taggart, how do these currents of air move in the Snow machines?

Mr. Williamson: You mean in your model of the
112 Snow machine, I suppose?

Mr. Ely: All right, I will amend it that way if you like.

A. Along the ceiling and floor of the incubator and along the side walls at the ends of the tray columns the air is coming out from the fan through the mass of eggs that are in the turning racks, the air is largely moving in towards the fan; there are a few exceptions to that, but the general rule is that the air is moving constantly, you might say flowing like the stream, which is the stream of air, flowing in towards the fans continually.

Q. Does it escape? Does the main body of the air?

Mr. Williamson: I didn't hear that.

Q. Does the main body of the air escape or what does it do?

A. There is only a small portion of it escapes constantly.

The Court: That is through these vents on the side?

The Witness: It escapes through the vents in the roof on the Snow. The intake is back of the fans on the sides. The amount of escape is controlled by the amount of intake. The intake can be regulated and of course a corresponding amount escapes.

Q. And then the main body of the air does what?

A. It goes around and around in continuous cycles, moving out from the fans along certain paths, moving in to the fans along certain paths.

Mr. Ely: Now I want to introduce that set of draw-
113 ings that Your Honor has just been looking at.

Mr. Williamson: Those that Taggart has just identified?

Mr. Ely: These are the drawings that Mr. Taggart has just been testifying to, the drawings of the Snow model machine.

The Court: Exhibit what?

Mr. Ely: This is going to be 12, the main drawing is Exhibit 12; 12-AA is section AA; 12-BB is section BB; 12-CC

is section CC; 12-DD and so on, 12-EE and so on, down to 12-KK.

The Witness: There is no II.

Mr. Ely: Oh, isn't there? All right, except there is no II.

The Court: Down to KK.

Mr. Ely: Yes, sir.

Mr. Williamson: Now, Your Honor, the defendant objects to all of these sheets and all of the witness' testimony in regard to them relating to the tests which have been made on the plaintiff's model of defendant's machine, in the first place we object to it as incompetent, as not calling for the best evidence and it not appearing but what the machine itself could be introduced and in the second place we objected to it as immaterial previously for the reason that they were purely ex parte tests to which neither the defendant nor his counsel were invited to be present and ex parte
114 tests have been held over and over again by the courts not to be entitled to any material weight.

The Court: That simply goes to the weight of its credibility. Overruled.

Mr. Williamson: Exception please.

Q. Now, Mr. Taggart, you have some similar drawings which are colored, I believe. What is the purpose of coloring those?

A. I colored certain planes to show—to make it clear in interpreting these. The red indicates air flowing to the fans or towards the fans and the blue, air flowing from the fans, and the white area in between is an area in which the air is either turned back from the blue into the red or else it is an area in which the currents are not definite enough to be classified as either the red or the blue. Now, these—in the tray columns, the entire column on both sides, that is covered red, the air is flowing towards the tray—on towards the fan. In the blue it is flowing away from the fans. Now if you will turn to BB, which is in a plane approximately six inches in front of the fans you can see how large an area —over how large an area the air is flowing towards the fans. The blue shows that the air is coming out along the top and along the bottom, the end walls, and coming out between the two fans due to the manner of the rotation of the fans counter-clockwise it throws that area off of center at

the top and the bottom. You see it is thrown to the
115 left at the top and thrown to the right at the bottom.
Now that is the same as sheet BB in the other drawings, except that it is colored. Now the next one, CC, is the same as CC in the last exhibit except that it is colored. You will note that there is a very close similarity between the two, yet there is some change. The center line now this is in the center of the tray, you understand, half way between the fans and the corridor, and the center line is—has narrowed up somewhat. Now the next one, DD, shows the conditions that are at or near the front of the trays. These readings were taken approximately three inches in from the front of the trays. You will note that the blue line along the right or along the extreme left has become considerably larger and the blue line through the center has faded and has practically faded on the right. There [—] other places along the floor where it is no longer in existence. Now I also have these showing the planes of trays, FF is in the plane of the second tray from the top. The blue shows the air coming out and the red shows it going back into the fan. You will notice that there is—the outcoming arrows are colored blue. There is a space in between that is white and that is where the air is curving back from the blue into the red. That is in an area of just plain mixing. It is a place where the air is turned back. The next set GG shows in the plane of the fifth tray from the top, and here again you find the
same conditions. In the set HH you find there the
116 conditions as they exist at the eye of the fan. That is
the eighth tray from the top. You will notice that over the large area of the fan surface the air is flowing into the fan, and between the fans and at the side of the fans the air is flowing out. Then in JJ we have the conditions as they exist on the eleventh tray from the top, which is repetition of the other drawings. And then in KK you have the conditions as they exist on the floor of the incubator. There the blue represents the air coming away from the fans and the red, the section where the air is definitely flowing back to the fans and the white space represents an area where there is a tendency for a curving of eddying of the air currents.

Mr. Ely: I want to introduce that set of colored drawings.

Mr. Williamson: We make the same objection to these colored drawings as we did the uncolored drawings, Your Honor.

The Court: That will be overruled.

Mr. Williamson: Exception please.

Mr. Ely: Which will be Exhibit 13, 13-BB, 13-CC, 13-DD, 13-FF, 13-GG, 13-HH, 13-JJ, and 13-KK.

Q. Now, Mr. Taggart, what is that that you have just produced here? What is it and what does it show?

The Court: Better mark the Exhibit.

Mr. Ely: That is going to be Exhibit 14.

A. Exhibit 14 is a model made to scale of the Snow model which shows the same conditions as shown in the
117 colored drawings which were just introduced. On the back wall here I show the side of the incubator with the fans in their position, showing the way in which they turn. On the floor I have shown the directions of the colored drawing there, showing the way the air moves out along the floor. The arrow shows the way in which it moves and the color is simply for identification. This plane we put in here corresponds to plane BB. It is in a position next to the back wall or to the side wall of the incubator. The red shows the area over which air is coming out from the fans—

Mr. Ely: Pardon me?

The Witness: Shows the area in which the air is moving towards the fan and the blue shows the area in which the air is coming out.

Q. What does the white show?
A. The white shows the space where the air is turning back into or from the blue into the red. The next plane which is midway between the front and the back of the trays corresponds to plane CC in the other exhibits and in the same way the red shows the area over which the air is flowing into the fan and the blue the area in which the air is coming out from the fan. Now the white again shows the space in which the air is turned back from the blue into the red. The next plane that we put in there showing the conditions near the front of the trays and that corresponds to DD in the other drawings. There again the red
118 shows the area over which the air is flowing into the fan; the blue, the area where it is flowing out, and the red shows the area—or the white shows the area in which the air is turned back from the blue into the red.

The Court: Where would the corridor be?

The Witness: This is the corridor. This is the front of the trays on the opposite side and you would have the same position except that this would be turned around.

The Court: There would be another.

The Witness: Another plane here, and this dotted line on the floor here shows the front edge of the trays on the other side of the corridor.

Q. How do the two sets of trays on either side of the corridor, what is the character of currents in the two sections?
A. As you stand in the corridor and face—this is the side, the currents are, you might say, exactly the same. That is you simply turn from—you just turn around through the corridor on your left hand side and would again show you what we see on the left hand side, on this side.

Mr. Ely: I want to introduce that model, Exhibit 14.

Mr. Williamson: We object to it as incompetent and immaterial to any issue in this case.

The Court: Overruled.

Mr. Williamson: Exception please.

119 Q. Now, Mr. Taggart, what is the difference, or what is the relative velocity, we will put it that way, in volume, of the air in the Snow incubator and in the Smith incubator?
A. In the Smith incubator there are four fans, that is, as put out by Robinson & Myers factory, 16 inch fans. They are supposed to throw fifteen hundred cubic feet of air per minute; that is running free, and if you put resistance in their path you immediately reduce that volume, or, in other words, the four fans, if there was no resistance in their paths, should throw six thousand cubic feet of air per minute, as advertised or sold by the manufacturer. In actual practice in the Smith machine, we find that this volume is reduced somewhat due to the resistance set up by the egg trays and the resistances in the passageway it has to go through. The type of the fan, as shown to us at Sleepy Eye, and as reconstructed by us, will throw six thousand or more cubic feet per minute through the fan, that is, each fan would throw as much or more air, as the four fans in the Smith machine. To compute this, I have taken the area across the front of the fan, or that shown in red here, and used the anemometer, and have found out the number of feet per minute that is flowing into the different fans at the different points of their

surface, and have taken the average of that, and I find it averages considerably over three hundred feet per minute going into the fan,—that is, lineal feet. Now, the surface of the fan is twenty square feet. It is twenty square feet
120 over the surface, and the average air flowing into it is three hundred feet per minute, which means that that fan is moving six thousand cubic feet of air per minute. Each of the four fans will do that. Now, that is measured, not by the out-going air from the fan, but by the air flowing into the fan. You can get the volume of air that a fan moves by testing it from the rear, from the way it feeds, better than you can from the discharge of the fan, because where it is discharged, it is much more turbulent, and it is hard to record. Now, again, in the area, or, again the speed is recorded through the different parts of the trays, and in the air space between the trays, and it shows that in the Snow machine there is three to four times as much air being moved through the Snow machine as there is through the Smith machine.

Q. What effect does that have upon the matter of any curtains, for example?

A. The air is being forced fast enough and in sufficient volume so that it will penetrate all parts of the machine, and there is no necessity for directing or guiding it with curtains or other means; in other words, it flows fast enough to definitely establish its own path.

Q. Now, in the Snow machine, the air, as I understand your testimony, moves in re-cycle paths, is that correct?

Mr. Williamson: That is objected to as leading.

Mr. Ely: I am simply summing up his testimony.

The Court: Overruled. I think he is simply summing
121 up what I have aready heard.

Mr. Williamson: Objected to as leading. You may note an exception.

The Witness: The air moves in continuous cycles and re-cycles.

Q. And what is the condition of the eggs in those cycles of air with respect to the age or stage of incubation?

A. The eggs that are in the paths of these currents are in all stages of incubation, so that the air, as it passes through the tray columns, or around the egg trays, will pick up heat from those in advanced stages of incubation, and carry it to other parts of the machine where eggs are in earlier stages of incubation, and it will keep the temperature substantially uniform throughout the entire chamber.

Q. What effect does this re-cycling of the air have on the Snow machine, in the matter of moisture conservation?

A. It helps to conserve the moisture, as well as to keep uniform temperature.

Q. Just one more question: From where does the air come which moves through the hatching process in the Snow machine, or the trays?

A. Through most of the hatching trays, the air is being propelled upward from the fan,—direct from the fan.

Q. Now, what are the practical advantages of the Smith invention?

Mr. Williamson: That is objected to as immaterial.

122 The Court: I suppose that is one of the main things, to explain to the Court what its advantages are. I suppose that that question goes directly to the very meat of the matter we have got to decide.

Mr. Williamson: I don't think he puts it right.

The Court: Objection overruled.

Mr. Williamson: Exception.

A. The fact that you can have a continuous hatching machine where you can always, by putting your fresh eggs into them, and have large numbers of them in the same machine, and have a temperature equally maintained because of the big reservoir of heat, and the difference in temperature there between the different eggs, the fact that you can do that, you can conserve not only on floor space, but you conserve on the heat necessary for taking care of the incubator. It makes it possible to maintain your heat uniform much better than you can do it otherwise, and it also makes it possible for one man to take care of three to four times as many eggs as he can do in the old style incubator, and it does not require anything like as good a building to put them in, and you do not have to be careful about drafts; also it is a much more efficient machine from the standpoint of economy and of operation, and from the standpoint of labor, and from the standpoint of quality of hatches.

Q. What about the quality of hatches?

A. The percentage of the hatching, of course, varies
123 with the quality of the eggs they place in there, and also the care which the operator gave his machine. We have instances of men operating from five to ten Smith incubators, that will have an average hatch for the season above 75 per cent of all eggs set. It is a safe average to

say that all the Smith incubators out, if given reasonable attention, will average 65 per cent hatching for the season.

Q. How does that compare with the hatches that they used to get in the old days?

Mr. Williamson: That is objected to as incompetent and there is a lack of any proper basis.

The Court: Overruled.

Mr. Williamson: Exception.

A. When I was working with incubators in college, a 50 per cent hatch was considered good, that is, on the average. The old style incubators could produce just as good chicks as those manufactured under the Smith patent, but, they were not uniform; that is, you never knew what you were going to get; it was too much of an art; there wasn't enough science connected with it, and you might get good results and you might get very inferior results and it required more skill on the part of the operator to carry out the process.

Q. Are you familiar with the incubators on the market today? A. Yes, sir.

Q. How did you get familiar with them?

124 Mr. Williamson: I did not get a chance to get in my objection and I move to strike out the answer to the former question and I object to the last question as immaterial.

The Court: I do not know what the last question was.

(Last two questions and the answer read by the reporter.)

The Court: Let it stand.

Mr. Williamson: Exception.

A. It has been my business to keep informed on all new incubators that come on the market, and to keep constantly in touch with the operations of the old incubators.

Q. What percentage of the incubators on the market today are incubators which use the Smith process?

Mr. Williamson: Same objection.

The Court: Same ruling.

Mr. Williamson: Exception.

A. Approximately 75 per cent. That is, you are referring to commercial hatcheries of large size?

Q. Yes, whatever way you want to put it. A. Yes.

Q. Now, just for the sake of comparison with the machine which I will ask the Court to see tomorrow, I wish you would tell me what this drawing is.

A. This is a scale drawing, giving dimensions of the incubator which we saw at Sleepy Eye.

125 The Court: You better mark that so the record may show what he is talking about.

Mr. Ely: That drawing I have just handed the witness I will ask to be marked as Exhibit 15.

Q. What does Exhibit 15 show?

A. It shows a cross section of the incubator which we saw at Sleepy Eye, which was shown to us there, and from which we took measurements. The measurements given there are the recorded measurements that we took at Sleepy Eye.

Mr. Williamson: Do you mean that is a view of the plaintiff's model of the defendant's at Sleepy Eye, his machine?

Mr. Ely: I did not say that.

Mr. Williamson: I would like to know just what it is.

Q. When was that visit to Sleepy Eye?

A. September 29, 1931.

Q. And we took detailed dimensions at that time, did we not?

Mr. Williamson: Objected to as leading.

A. Yes.

Q. Is this drawing a drawing which you prepared from those detailed dimensions which we took? A. Yes, sir.

Q. Did you use those detailed dimensions in the construction of this model you have testified about this afternoon?

A. Yes, sir.

126 Mr. Ely: I offer in evidence, for the sake of comparison with the machine we have, this drawing, as Exhibit 15.

The Court: It may be received.

(At this point a model was marked by the reporter as Plaintiff's Exhibit 14; drawing referred to marked by the reporter for the purpose of identification as Plaintiff's Exhibit 15.)

Q. You told me you wanted to call the Court's attention to something on the Snow advertisement, Exhibit 8. What was that?

A. There are two photographs on those, the photograph on Exhibit 8-B, which shows a corridor view of the machine, or their machine which we saw at Sleepy Eye. The corridor view shows Mr. Snow in the corridor of the machine. If that is not the machine that we saw at Sleepy Eye, it is one very similar to it, from that view. Now, on Exhibit 8, at the bottom of the page we have a photograph, or a cut of a photograph that is labeled, "Snow's incubator", and "designed and patented by E. H. Snow." That is a very good picture of the machine which we saw there and which we had a chance to examine and take measurements of and make tests. I identified it as the same machine because the post that was in front of it that supports the floor above and other things about it are the same.

127 The further testimony of this witness, Joseph I. Taggart, under direct examination, appears on pages 105 to 113, inclusive, of the typewritten record, and are here reproduced in full.

128 November 17, 1932,
At 9:45 A. M.

Court and counsel present.

(By direction of the Court, the Court and counsel and court reporter visited a warehouse on Thirteenth Avenue Northeast, near the foot of Broadway Bridge, Minneapolis, Minnesota, in which there were set up the Smith machine and the plaintiff's model of the Snow machine, and a demonstration was had of these two machines, from 9:45 to 10:15.)

(Returned to the court room at 10:30 a. m.)

Joseph I. Taggart, recalled, testified as follows:

Direct Examination (Continued).

By Mr. Ely:

Q. Now, Mr. Taggart, we have just returned from the demonstration at the warehouse, where you displayed the Smith incubator and the model of the Snow machine. Now, how do those tests compare with your data that you have already given?

A. The tests that we made demonstrated that the record as shown in the data was correct.

Q. And how did the air move in the Snow machine?

Mr. Williamson: What machine are you talking about?

Mr. Ely: The Snow machine that we saw at the warehouse.

A. The air had moved in current form from the fans out along the ceiling, and walls and floor, and then would flow to the fans in current form over a large portion of the
129 fan area. There were other places where the air was turned back from the out-going current, from the fans to the current that was flowing to the fans.

Mr. Williamson: I think that the particular machine that he is referring to ought to be made distinct, as to whether it is the Smith machine or the model of our machine.

By Mr. Ely:

Q. The machine that you have just referred to is what machine, Mr. Taggart?

A. The model of the Snow machine, as we called it.

Q. Now, was it possible for you to determine those currents?

A. Yes, sir.

Q. And could you plot that current movement?

A. It could be plotted, yes.

Q. Could you determine its velocity?

A. Yes, sir.

Q. Was the current movement identifiable?

A. Yes, sir.

Q. Was it in a constant direction?

A. Yes, sir.

Q. Now, Mr. Taggart, I notice in reading over the transcript of the record of yesterday's proceedings that the stenographer apparently misunderstood you in your answer to the question: "Question: Now, what about the speeds of the four fans in this machine down at the Flour Exchange?"—
That is the machine that was exhibited to us in the
130 Flour Exchange as the Snow machine. That is on page 55 of the record. The answer is, as we have it down here: "In the machine down here they varied from 180 some to 120 some,—I have forgotten the exact numbers, but the average speed was only 201 RPM." Now, will you refer to the record,—

Mr. Williamson (Interrupting): That is objected to as grossly leading this witness, and telling this witness that his answer was not correctly taken down, and so forth. He ought to be asked whether his answer is correct.

The Court: Well, the witness can say what he has to say about that answer.

Mr. Williamson: Exception.

A. This record here has "120 some;" it should have been "220 some." The average given there is correct.

By Mr. Ely:

Q. Well, you have the exact speeds, haven't you, at this time?

A. Yes, sir.

Q. Now, will you give us what they are?

A. May I refer to the records?

Mr. Williamson: If the witness is going to refer to notes, we ask that they be introduced in evidence. If he is going to refresh his recollection from the notes, I submit that the notes should be offered in evidence.

By Mr. Ely:

Q. Are you refreshing your recollection from those notes?

A. Yes, sir.

131 Q. Well, will you go ahead?

The Court: Of course, they have a right to inspect the notes, and to offer them in evidence.

By Mr. Ely:

Q. All right. Have you your notes there?

A. I just simply have a notation taken down here, which I copied from the chart that I made at the warehouse.

Mr. Williamson: Well, let it go; no objection.

Mr. Ely: All right.

A. On the four motors of the Snow incubator, or the four fans of the Snow incubator, as shown down here, which is exhibited at the Flour Exchange, on the right hand side,—

Mr. Williamson (interrupting): Which one are you talking about now?

A. The Snow incubator at the Flour Exchange. A test was run there on Monday of this week. The front fan on the right hand side, at 225 RPM, and the rear fan on the right hand side at 190 RPM. On the left hand side, the front fan was 204 RPM, and the rear fan was 184 RPM.

By Mr. Ely:

Q. Now, what was the speed of the fans on the Snow machine that you saw at Sleepy Eye?

A. On the right hand side the front fan was 210, and the rear fan 208. On the left hand side the front fan was 217, and the rear fan 208.

Q. Now, what was the speed of the fans in the machine that we just saw demonstrated, the plaintiff's model of the Snow machine?

132 A. I will have to give that from memory. I do not have those records right here with me.

By the Court:

Q. You made a note of it at the time?

A. Yes, sir.

By Mr. Ely:

Q. I have them here; they are on one of those drawings, on the back of it—right there (indicating).

A. On the left hand side,—

Q. (interrupting): No, pardon me; this is it right here, "RT?"

A. On the right hand side, as you face the machine, the front fan was 209, and the rear fan 207 RPM. On the left side, the fan was 205, and the fear fan was 208 RPM.

Q. Now, you tested the speed of the fans in the Smith machine there?

A. Yes, sir.

Q. What was the speed of those four fans?

Mr. Williamson: You mean, the one we saw this morning?

Mr. Ely: Yes.

A. The front fan was 1664; the second fan was 1648; the third fan was 1689, and the rear fan was 1667.

Q. And do you know the diameter of the fans?

A. They are 16 inch fans.

Q. Now, in the test of the Snow machine, from which we have just come,—

Mr. Williamson (interrupting): You mean, the model?

133 By Mr. Ely:

Q. Yes, the model from which we have just come, how was the current of air flowing underneath the hatching tray?

A. At the back of the hatching trays, it was flowing out from the fan at all points, although we did not make that test this morning, but at the front of the trays, it was flowing out at part of the trays, and flowing in at part of the trays.

Q. How many trays was it flowing out, taking one side,—of one side, how many trays was it flowing out?

A. Well, if you will pardon me, that is shown definitely in the drawings.

Mr. Williamson: Well, that drawing was not made today off of this model.

By Mr. Ely:

Q. How does that drawing compare with what you found today?

A. It checked at every place that we checked it.

Q. Well, then, underneath, how many hatching trays was the current going in on one side?

A. There is only one hatching tray where the in-current was clear across the front of the hatching tray space. There were one, two, three, four others, in which there was an ingoing current at a part of the space. At other parts, it might be stopped, or, on the other side, it might be going out. That is shown in "kk" of both the colored drawings and the plain drawings.

Q. Do you know where that current was coming from
134 that was flowing into the hatching trays?

A. It was coming from across the floor of the corridor.

Q. From the fan?

A. From the fan on the opposite side.

Q. Now, there is just one other thing that I want to ask you about, and that is in regard to something that was brought up on the matter of the patent in suit.

Will you please show to the Court what the patent in suit, —what reference there is in the patent in suit to the flaps between the columns of egg trays; those are the flaps which are designated "28."

Mr. Williamson: Now, we repeat our objection to this question, and to any question along this line put to the witness on the ground of incompetency, this witness not having qualified as a patent expert. We made that objection when the first question was put to him, where he was asked to explain the machine of this patent. He is not qualified as a patent expert, and we object to it as incompetent.

The Court: The objection will be overruled.

Mr. Williamson: Exception.

The Court: Now, will you read the question, Mr. Reporter?

(Previous question read by the reporter.)

By the Court:

Q. Where are you referring to?

A. If you will refer first to the figure "3", please?

Q. All right.

135 A. If you will notice the turning racks,—at the bottom of the turning racks here (indicating), Your Hon-

or, right at the bottom there is a connecting flap that goes from the bottom of one column.

Q. Oh; here it is; I see it (indicating).

A. Yes, sir, right there (indicating); it connects this column (indicating).

Q. Yes.

A. That flap is connected to the bottom of each of the trays, for the purpose of making the air go through those particular trays.

This is referred to first on page two, at line 28. You are on page one of the printed subject, Your Honor. On page two, line 28, it states: "As explained later, the trays near the bottom are preferably arranged so that the air is forced to pass between the eggs in each tray, thereby cooling or holding the temperature of those eggs down."

Now, again, in line 56, in the same column, it states: "and it will be also noted that the vertical spaces 27 between the adjacent tilting racks 10 are closed at their lower end by flexible strips of fabric, which are attached to and extend upward at each side of each rack, so as to compel the air to circulate through the mesh bottoms and around and about each tray as heretofore referred to."

Q. You have got it "egg" here.

A. Yes; "and around and about each egg as heretofore referred to."

136 By Mr. Ely:

Q. That is, the Patent says that those are preferably used, is that correct?

A. Yes, sir.

Mr. Williamson: Where does it say the word "preferably,"—where is that?

The Witness: On line 29.

Mr. Ely: On line 29, right there (indicating).

By Mr. Ely:

Q. Now, in your Smith incubators, do you use any such device?

A. No, sir.

Mr. Williamson: That is, in the commercial machine, I suppose?

Mr. Ely: I said the Smith incubator.

By Mr. Ely:

Q. Now, Mr. Taggart, one other question: In the Patent in suit, are the trays capable of being moved,—are the egg trays capable of being moved in and out of the hangers individually?

A. Yes, sir.

Q. And that is the way they are used in the Buckeye machine, is that correct?

A. Yes, sir.

Mr. Ely: You may cross-examine.

137 Joseph I. Taggart, under Cross-Examination (pp. 114-2nd line p. 142).

Taggart repeats that he is Assistant General Manager of the Smith Incubator Company and has occupied that position for approximately four years, but had been with the Smith Standard Company from the fall of 1923 to 1927, but, at the same time, did work for the Smith Incubator Company. Practically has been working for the Smith Incubator Company for the last ten years. Thinks the Smith Standard Company was a corporation, but if so does not know whether it is dissolved or not, but it quit operation in 1927. Says it was a hatchery and that Dr. Smith owned or controlled the Smith Standard Company and also the Smith Incubator Company. Understands that the Smith Incubator Company is a corporation. Thinks organized under the laws of Ohio, but is not certain, and don't know how long the Smith Incubator Company has been organized. Says it is Dr. Smith's personal business. Says there is also a Smith Incubator Manufacturing Company, and that Dr. Samuel B. Smith, the plaintiff, is the controlling stockholder in both of these concerns, but Taggart can't tell which one writes his checks. Says he does not own any stock in either of said two corporations. States that his remuneration, as Assistant Manager of the Smith Incubator Company, consists of a salary and a percentage of the net profits, and this has been the situation for the past four or five years. Says he, himself, has no interest in the title to the Smith patent in suit. Does not know whether the Smith Incubator Company has any interest therein or not. However, that may be, Smith controls the busi-
138 ness of the Smith Incubator Company. Says the Smith Incubator Company is not directly interested in the proceeds of litigation under the Smith patent, and that the legal title stands in Dr. Smith's name. States that in earlier recoveries for profits and damages in infringement suits, the Buckeye Incubator Company received the same, but in later

cases, Dr. Smith gets such recoveries, but the Smith Incubator Company got the benefit of the said litigation from its sale of incubators. He repeats that he, Taggart, gets a percentage of the net profits of the Smith Incubator Company and that this had been the situation for approximately five years. Says the Buckeye Incubator Company, formerly of Springfield, Ohio, is exclusive licensee under the Smith patent, on a royalty basis and that these royalties are payable to Smith personally. States that he is not a lawyer and has never studied patent law, except as associated with the incubator business, and only claims to be a patent expert insofar as incubators are concerned. He has testified in perhaps a half dozen cases as a patent expert. He states that he has not read the Statutes to a sufficient extent to know the distinction between the disclosure made by the drawings and specifications proper of a patent and the claims of a patent.

In his testimony as to the disclosure of the Smith patent, he had confined his attention to the specification proper, including the drawings, but did not undertake to "explain the claims at all." Being asked whether he had read the file wrapper record of the Smith patent in suit, he answered that he'd done so in the past, but not lately. Says he is not sure that he could give definite answers relating to all parts of the file wrapper record of that patent, but had gone over it and studied it out. Then being asked whether he took
139 that file wrapper record into consideration in forming his theory of the disclosure of the Smith patent that he had stated to the Court, he replied that he could not give any definite answer to that question. Then, being asked whether he had considered any or all of the prior patents cited on that file wrapper record of the Smith patent in suit, he answered that he had considered all of them "in the past", and took them into consideration in forming his theory of the disclosure of the Smith patent, but he admits that he had not studied any of these patents recently before he took the stand in this case. Under direct examination, he had testified to the effect that the machine of the Smith patent was capable of being used successfully without the presence of the curtains in the corridor of the machine. And then being asked whether he found in the Smith patent any statement to that effect, he answered "Yes, sir", and called attention to the sentence beginning in line 73 of page 2 of the patent.

Then, the further proceedings on pages 125 and 126 of the typewritten trial record were as follows:

"Q. Point it out.

A. On page 2 of the descriptive matter, line 73.

Q. Line 73?

A. 'It is obvious that the fans can be so arranged and can be operated at such speed as to cause the hot air to circulate fast enough to keep the temperature throughout the chamber between the limits of 100 and 105'.

Q. It don't say without curtains, though, does it?

A. It simply says that you can drive the fans fast enough to circulate the air. It makes no mention of curtains whatever.

Q. It makes no mention of curtains whatever. It does mention the curtains at other places in the specification, does it not?

A. They are described in the preferred apparatus that Smith has set up.

Q. And in the described operation set forth in that patent it is set forth with reference to the machine which has the curtains on, is it not?

140 A. The preferred apparatus, as shown there, has curtains, yes, sir.

Q. And he does not illustrate or describe any modified apparatus, does he?

A. It is not customary, no, sir.

Q. Never mind that. Answer my question. The patent doesn't show any modification, does it?

A. He only describes one preferred apparatus.

Q. No modification?

A. I have stated he only describes one preferred apparatus."

Taggart specifically stated that in the commercial incubators, made and sold by the Smith Incubator Company, curtains were always present, and, in the incubators sold by the Buckeye Incubator Company, partitions serving the same purpose as the curtains, were present in all incubators sold. His attention having been called to the length of the curtains in the vertical plane, Taggart stated that the curtains as used on the commercial machines, put out by the Smith Incubator Company, were somewhat shorter than those shown in the Smith patent, varying from 2½ to 5½ or 6 inches from the top of the hatching tray, and that the partitions used for the same purpose in the incubator made and sold by the Buckeye Incubator Company, have varied from time to time, but as a general rule, the lower ends of said partitions came just about to the top of the hatching trays. He states that on direct examination, he had made a statement to the effect that, under the disclosure of the Smith patent, the air might

be circulated in any suitable way. Being asked whether anything to that effect was said in the Smith patent, his answer was "yes, sir", and then being asked where, he said "In the claims", but stated that he was not a patent expert in respect to the claims of the patent. Then, being asked whether he could find anything in the drawings or specifications of the Smith patent in suit, to indicate that the air might be
141 circulated in any way, he again calls attention to the sentence beginning in line 73 on page 2 of the patent, which he had referred to and quoted in a previous answer.

He stated that the word "agitation" is not anywhere used in the specification of the Smith patent. Says that, in his explanation of the Smith patent to the Court, he did not talk about his own experience with incubators. He repeats that, in his explanation of the Smith patent to the Court, he told the Court that the curtains could be dispensed with. Being asked on what he based that statement, he says that the patent states that the air must be circulated with sufficient speed to keep the temperature uniform throughout, and that curtains are not necessary for that purpose.

He stated that the Smith patent did not anywhere say either that the curtains were not necessary or that they were necessary. Then the next five questions and their answers, appearing on pages 130 and 131 of the typewritten record, read as follows:—

"Q. But the method which he sets forth in there is partially effected, that is the method of air circulation, which he sets forth in the patent, is largely affected by the curtains, is it not?

A. In the preferred apparatus, yes.

Q. Yes. Thank you. And that air, as he describes it in the patent is forced down from the top by those fans in the columns, is it not? A. In the preferred apparatus, yes, sir.

Q. And it goes down to near the bottom of the machine, a large part of it striking the floor and is then deflected in under the columns of trays, that is true, is it not, beneath the lower edges of the curtains, that is right, is it not?

A. Yes, sir.

142 "Q. Then it goes up along the trays and through the trays to the gallery at the top or each of the galleries at the top above the tiers of trays and then back over to the fans, does it not?

A. Yes, sir.

Q. And then is re-forced again down the column from the corridor and repeats that over and over again, that is right, isn't it? A. Yes, sir."

He states that, under direct examination, he had testified to the effect that he was familiar with incubators as they were used in this country prior to the appearance of the incubator of the Smith patent, and states that those which were successful, so far as known to him, only had one tray or pair of trays—egg trays—located on a common level.

The next question put to the witness at the top of page 132, of the typewritten trial record, and its answer, read as follows:—

"Q. That is all you saw. You don't mean to say that there were not other kinds of incubators in use, do you?

A. Well, I made a study to try to find others, and I have never found one that was commercially a success. I have found some that they tried to use commercially, but I did not find any that were in commercial operation or successfully operated. The standard type of an incubator that was in use prior to the Smith invention, the eggs were arranged at one level."

He states that there have been incubators shown in prior patents and publications, with egg trays arranged on more than one level, and wherein the incubators were heated to uniform temperature under thermostatic control, but says that Smith was the first "to combine staged incubation where the eggs were arranged at different levels and employed forced draft." Says there were plenty of cases where they tried to hatch at different levels, but that, so far as he knew, none of them were successful.

143 His attention being called to that part of his testimony under direct examination, wherein he had said that Smith was the first to use the heat of the hatching chickens, after the chickens come to life, to supply some of the heat for hatching other chickens in the incubator, he made the following further statement, to-wit:—

"He (Smith) certainly was the first to perfect a means whereby it could be carried out, where the temperature was kept uniform throughout the chamber."

Then, being shown a copy of the U. S. patent to Zimmer, 1,075,747, of October 14, 1930, he stated that he had read the same, and that this Zimmer patent did disclose an incubator, wherein the eggs were set at different times with feather mats between them, and wherein the heat of the hatching eggs, earlier set, was utilized to help hatch the eggs in the later stages of incubation, but says that the temperature

within the cabinet was not uniform and that that Zimmer type of incubator had not been successful. Then, having been shown a certified copy of the German patent to Stulik, No. 155,917, of November 7, 1901, and a certified official English translation of that German patent, and asked whether he had read it and understood it, he testified as follows:—

"Q. Do you understand it?

A. Yes, sir. In this Stulik patent it shows staged incubation with the hottest eggs always in the top of the column and the ventilation comes in from the bottom and goes up through the incubator and out at the top, escaping entirely to the outside. So that any heat generated would pass on out. The coolest eggs are always at the bottom, as described in the Stulik patent.

Q. But he did get the benefit of the heat from the eggs in the last stage of incubation on the others?

A. You absolutely would get no benefit from them whatever.

Q. That is your statement, is it?

A. (No answer)."

144 Says that he graduated from the Ohio Wesleyan University securing the degree of bachelor of science; and that while attending this institution he took the general cultural course—regular academic course—but specialized in zoology. Says he does not claim to be a mechanical engineer. States that he never took any general course of training in heating or ventilating, but, that when in college, he had a course in physics and has done more or less work in heating and ventilation connected with incubators and hatcheries.

Then the said witness Taggart's further testimony, under cross-examination, pages 139 to the top of page 142, and his further testimony under re-direct examination, pages 142 to 148, inclusive, of the typewritten record are as follows:—

145 Q. Having regard to the specimen of the Smith machine, which you and Mr. Ely showed to the Court, in the presence of counsel for the defendant, and Mr. Rowley, this morning, you put in certain tabulated sheets and gave testimony as to the action of the Smith machine, did you not, on direct examination?

A. That is the air currents in the Smith machine?

Q. Yes.

A. Yes, sir.

Q. Now, when you made those tests with that specimen of the Smith machine, which tests you tabulated and introduced into evidence, was the machine then in the same condition that it is now over here in the warehouse, and as it was shown to the Court this morning?

A. Yes, sir, with the addition that the heating pipes and things of that kind were connected,—the heating plant was not connected with this one this morning; that is the difference.

Q. The moisture supply, and so forth, was that all connected, too? A. Yes, sir.

146 Q. Well, were the trays all in and the curtains in use at the time you made the tests, which you tabulated and introduced into evidence, with that Smith machine?

A. Yes, sir.

Q. You also showed to the Court, in the presence of counsel for the defendant this morning, in the same building, the plaintiff's model of what has been referred to in the plaintiff's testimony as the plaintiff's model of the defendant's machine, did you not? A. Yes, sir.

Q. You have identified and introduced tabulated sheets, and have given testimony regarding certain tests you made of that machine, have you not? A. Yes.

Q. At the time you made the said tests of the plaintiff's model of the defendant's machine, was the machine then in the same condition that it was today when you showed it to the Court? A. Yes, sir.

Q. Where did you make those tests?

A. They were made in Cleveland, Ohio.

Q. When?

A. At various times; some of them were made last spring and others this fall, and late summer.

Q. Neither the defendant nor his counsel were asked or given opportunity to see those tests, were they?

147 A. No, sir.

Q. At the time that you tabulated the tests that you made of the plaintiff's model of the defendant's machine, were the trays all in position at the time of all the tests, just like you showed it to the Court this morning?

A. Yes, sir. I might add that sometimes the trays were tilted in the opposite position, but the trays were all in and all in operating position.

Q. Were the tiers of trays, or any of them, taken out at any time when you made those tests, of which you have made tabulations and introduced them here?

A. There were times in making tests along the back wall, where the fan is operating, that I pushed the trays

aside, and stood up on the hatching racks back in there, to get the anemometers in position, but the trays were all in position when all the other tests were made, and practically all the tests on the back wall,—I would not say about all of them, but practically all of them.

Q. In some instances, some of the trays may have been removed?

A. In some instances, when I was checking on the back wall, where the fans are, they may have been,—I couldn't say positively about that.

Q. In respect to your tests of the said Smith machine which you showed the Court this morning, were the curtains always on in the same position when you used
148 them for hatching, as when you made those tests?

A. Yes, sir.

Mr. Williamson: That is all.

Redirect Examination.

By Mr. Ely:

Mr. Ely: I think I might as well introduce those two machines in evidence which we tried out this morning, and I will introduce the Smith machine as Plaintiff's Exhibit 16, and as Plaintiff's Exhibit 17, the plaintiff's reproduction of the Snow machine.

Mr. Williamson: Don't you call it a model?

Mr. Ely: I am calling it a reproduction when I am introducing it.

Mr. Williamson: We make the same objection to the machines now being offered that we did to the photographs of the machines before. That is objected to as incompetent, and secondary evidence, and not being a machine which the defendant ever actually made.

The Court: Objection overruled. They will be received.

Q. Now, there has been some reference to this Snow machine over there as a model. Is it a full sized working machine? A. Yes, sir.

Q. And the dimensions are accurate, in accordance with the machine which you saw at Sleepy Eye?

A. Yes, sir.

149 Mr. Williamson: That is objected to as leading.

The Court: It is leading, but I will let it stand.

Q. You said something on cross-examination about a license to the Buckeye Company. I don't think you quite

gave a complete answer on that. What is the status of the license that the Buckeye Company operates on?

A. The Buckeye Incubator Company holds an exclusive license to manufacture machines under the Smith Patent, up to sixteen thousand five hundred egg capacity. Dr. Smith reserved to himself the right to manufacture machines of twenty-five thousand capacity and over.

The Court: What about those between sixteen thousand and twenty-five thousand?

The Witness: They mutually agreed that was forbidden territory, and neither one of them would manufacture in that capacity.

Q. Now, Mr. Taggart, on that demonstration of the Smith machine this morning, I don't remember whether I asked you this on direct examination or not, but just so to be sure, did you demonstrate that Smith machine with the curtains pulled back?

A. Yes, sir.

Q. What was your purpose in doing that?

A. To show that there was an upward movement of air between the tray columns and through the trays when the curtains were not there.

150 Q. How did you make that,—pardon me?

A. By anemometers demonstrating that there was an upward current through those columns even clear to the back of the column, and I also demonstrated that the lower part of the turning racks near the corridor, the air would be going down at that particular point, instead of going up, or in other words, the fans do not throw just a shaft of air,—it is like a cone. The fans throw a stream of air that goes out cone-shaped, and as set in that machine, the edges of that cone current strike the front of the trays at about twenty-eight to thirty inches above the floor, so from there down it is going downward, and and then curves up.

Q. What is the relative speed of the upward current in the egg columns, with the curtains over and with the curtains out of the way?

A. It is approximately the same, but in the positions where the anemometer,—the position farthest back where the anemometer is placed, it runs faster.

Q. Runs faster when?

A. When the curtains are thrown aside so there are no curtains there.

Q. Now, will you take your copy of the Smith Patent for just a minute. Now, with respect to those curtains, concern-

ing which there has been so much discussion, the Patent shows the curtains down to the top of the hatching tray, is that correct?

151 A. Yes, sir.

Q. And in your commercial machine, where are the lower edges of the curtains?

A. At the present time, we put them five to five and one-half inches above the rail of the hatching rack; that would be about seven inches or a little more above the top hatching tray.

Q. Has anything been done to the fans, or has there been anything done to the velocity or volume of air when this change was made?

Mr. Williamson: That is objected to as immaterial. What is done in a commercial machine is absolutely a matter of indifference.

The Court: Overruled.

Mr. Williamson: Exception.

A. The fans we use in the commercial machine are considerably larger than those represented in the Patent, and we have found that with the larger fans we can get a definite current of air through the eggs, which we have placed at the bottom of the machine with shorter curtains, and we have been following that method for quite sometime.

Q. Now, let us pursue that subject, a little further. Suppose you put them higher, the edges of your curtains, say, ten inches above the hatching tray, what would you do to get the same results?

A. We would get the same results with our present
152 equipment, but, as you would shorten the curtains, if you increase the fan volume sufficiently, you would still have a definite circulation through the hatching trays, or to do the reverse, you can lower the fans,—the fans are placed,—in the Smith, they are placed six feet and two or three inches above the floor, so people can walk in the corridor. If we lowered the fans so as to bring the force of the air nearer the floor, we would not necessarily need any curtains at all.

Q. How would you then get at your trays?

A. That would be a problem with the Smith machine.

Q. How about the Buckeye? How do they get at them?

A. They have doors, or they do not work within the corridor of the machine at all. They have doors on the outside which they open to get at the trays that are in that turning

rack. For example, in the Patent it shows a door on the left hand side of Figure 1.

Q. Suppose we pursue that still further, and put the lower edge of the curtains, say, two feet above the hatching trays so you just have one narrow curtain, what would you do then?

A. You would want more fan velocity.

Q. What about the location of the fans?

A. Well, the fans could be lowered to take up the difference.

Q. Would you get the same circulation of air through the trays?

153 A. Yes, sir.

Q. And so on up until you have an extremely narrow curtain, what then?

A. You would have the same result if you increase your fan volume and velocity accordingly.

Q. Then I understand the curtain could be entirely dispensed with and the Smith process could still be carried on?

Mr. Williamson: That is objected to as incompetent and calling for a conclusion of the witness.

The Court: Well, he is testifying here as an expert.

Objection overruled.

Mr. Williamson: Exception.

A. Yes, sir.

Q. That Stulik German Patent, to which your attention was called, are you familiar with former litigation under this Patent? A. Yes, sir.

Q. Has that Patent been considered in other decisions?

Mr. Williamson: I object to that.

Mr. Ely: The Stulik Patent is mentioned specifically by Judge Wooley in the Hillpot case, as failing to meet the Smith invention.

The Court: You are asking whether it was considered in these decisions. Wouldn't those decisions prove that?

Mr. Ely: Sometimes the Patent has been referred to and sometimes it has not. In the Hillpot case specifically,

154 Judge Wooley referred to the Stulik Patent as the best in the prior art references, and held the Smith Patent valid over it. I suppose I might ask Mr. Taggart this question: Were you present, or have you been present at former trials on this Patent?

The Witness: Yes, sir.

Q. Are you familiar with the art which was set up therein?
A. Yes.
Q. Did you testify with regard to that art? A. Yes.
Q. Did you ever testify in regard to the Stulik Patent in any of that litigation?
A. Yes, sir.
Q. Did you ever testify as to the Zimmer Patent in regard to that litigation? A. Yes, sir.
Q. Do you know whether the Stulik Patent was cited in the Patent Office?
A. I am under the impression it was, but I cannot say positively.

Mr. Ely: I think that is all.

Mr. Williamson: No recross-examination.

(Witness excused.)

---

155 HARRY B. PERKINS' Testimony, Under Direct Examination. (In narrative form).

Harry B. Perkins, a witness called on behalf of the plaintiff, being first duly sworn, testified to the following effect:

States that he is sixty-six years of age and resides at 3565 Rocky River Drive, Cleveland, Ohio. Says his occupation now, and for the past eight years, is and has been as Secretary of the Smith Incubator Company. Says he has charge of the accounting at the Smith Incubator Company, including records of the machines sold by that company, and also sold by the licensee, the Buckeye Incubator Company. Says that he has compiled from the books of the company, a statement showing the number of incubators manufactured and sold by the Smith Incubator Company and by the Buckeye Company. Says it would not be feasible to bring the books and records to the place of trial. The witness' testimony and the said compilation referred to by him, were objected to as incompetent, but were admitted by the Court on the understanding that the books would be produced and made available to the inspection of defendant's counsel, and also subject to a ruling to be made by the Court in his decision. This ruling, however, was not made in the trial court's decision. Defendants' counsel offered to admit that "the Smith incubators had been in very extensive use". The witness was then allowed to proceed, and he stated that the records covered the gross sales of the forced draft incubators sold by the Smith Incubator Company and by the Buckeye Incubator Manufacturing

Company. That the tabulations regarding the sales of
156 the Smith Incubator Company were prepared under his supervision from the books of that Company, but that he, himself, did not keep the said books. Regarding the tabulations from the Buckeye Incubator Company, he says those were prepared from royalty statements rendered by the Buckeye Incubator Company to the Smith Incubator Company. Says that in the period from 1922 to October 31, 1932, the Smith Incubator Company manufactured 1885 Smith incubators with a total egg capacity of 90,090,000, and that the money value thereof was $12,213,084.25. Says that the Buckeye Incubator Company paid to the Smith Company royalties on 10,228 machines, having an egg capacity of 98,247,728, and that the value in money was $11,726,987.56, and that the total number of machines made by the two concerns was 12,113, having an egg capacity of 188,337,728, eggs, and a money value of $23,940,071.81.

The witness then produced and identified orders received from the defendant, E. H. Snow, for Smith incubators, the first thereof having been dated November 7, 1924, for a single incubator, and the second June 13, 1925, another order was dated April 1, 1926, and two were dated June 2, 1926, three on June 15, 1926, another on June 15, 1927, and another on September 10, 1928, a total of twelve incubators.

Says each of said incubators had a capacity of 47,000, and that $72,102.00 was paid by said Snow for said Smith machines.

The contract of June 13, 1925, between the Smith Incubator Company and E. H. Snow was produced and identified by the witness and offered and received in evidence, on behalf of the plaintiff, and marked "Plaintiff's Exhibit 18".

157 The tabulation sheet, identified by this witness, Harry B. Perkins, was offered and received in evidence and marked "Plaintiff's Exhibit 19".

Harry B. Perkins' Testimony, Under Cross-Examination.

The witness states that he did not, himself, keep the books or make any of the entries from which his tabulated reports of the Smith Incubator Company were prepared. He also states that he did not make the royalty returns of the Buckeye Incubator Company and did not keep any of the books from which those returns were made.

Then the following further proceedings were had as shown by page 163 of the typewritten record, here reproduced in full, beginning with line 4 thereof, to-wit:

"Mr. Ely: Now, if your Honor please, Mr. Williamson made the statement that Mr. Snow had made a machine long before he purchased any Smith machines. I will ask Mr. Williamson if he will identify this letter.

The Court: Just a moment. That is not in evidence.

Mr. Ely: No, no, but I am asking Mr. Williamson if he will identify this as a letter of Mr. Snow, that I wish to put in evidence.

(Document submitted to Mr. Williamson).

Mr. Williamson: I have never seen this letter before; I don't know whether it is a letter from Mr. Snow or not.

(Document submitted to Mr. Snow by Mr. Ely).

Mr. Williamson: It will be time enough to ask him that when he is on the stand, I should think.

The Court: Well, your answer is sufficient.

Mr. Williamson: If he does not recognize the letter, he can say that he does not recognize it.

Mr. Snow: I don't remember that.

Mr. Ely: Will you take the stand, Mr. Snow, please?"

---

158 EARL H. SNOW'S Testimony, Under Direct Examination. (In narrative form)

Earl H. Snow, a witness called on behalf of the plaintiff, being first duly sworn, testified to the following effect:

That he is the defendant in this case, Being shown a letter, dated October 30, 1924, he stated that it was his letter. Does not know whether he received a reply to that letter or not. Says he has no recollection of receiving such a reply. His letter of October 30, 1924, was then offered and received in evidence and marked "Plaintiff's Exhibit 20". Then a letter from the Smith Incubator Company to Mr. Snow, dated November 4, 1924, was marked for identification as "Plaintiff's Exhibit 21", but it was not there offered in evidence.

JOSEPH I. TAGGART'S Testimony. (Recalled).

States that all of the Smith Incubator Company's incubators sold were marked with the word "Patented", and that there is such a mark on the incubator, previously introduced on behalf of the plaintiff.

Then being asked to state whether he knew where the copy of a letter came from, he answered that "It came from the general files of our office in Cleveland". Then this carbon copy of that letter was offered and received in evidence and marked as "Plaintiff's Exhibit 21".

Then plaintiff's counsel, Mr. Ely, stated on the record, on page 167, that the plaintiff rests.

---

159 Defendant's Case.

SAMUEL B. SMITH's Testimony, Under Direct Examination. (In narrative form).

Samuel B. Smith, the plaintiff in this case, having been called as the adverse party in this suit and examined as a hostile witness in accordance with the Minnesota State Statute, Section 9816, Volume II of Mason's Minnesota Statutes, and U. S. Compiled Statutes, Section 1464, testified to the following effect:

That he is the plaintiff in this case. He is sixty-one years of age and resides at 48 Culver Road, Rocky River, Cleveland, Ohio. States that he is the patentee of the Smith patent in suit, 1,262,860, of April 16, 1918. States that he was a witness on behalf of the plaintiff in a prior suit, entitled "Buckeye Incubator Company and S. B. Smith, plaintiffs, vs. Elton E. Cooley, defendants". States that he once lived and had a place of business at Attica, Ohio, which place was about ninety miles from Cleveland. States that he built an incubator at Attica, Ohio, in 1912, and moved it over to Cleveland, Ohio, and there ran the same in the hatching of eggs in the years 1913 and 1914.

Then being asked to describe the structure of that incubator used in the period stated by him, he answered, as follows:

"A. It was built in three compartments or rooms, each one separate, without any connection between them. These compartments were about nine and one-half feet wide, and about twelve feet long, and some were about ten feet
160 high. The heating pipes were on the floor. There was one fan in the center of the ceiling, and then there was a space between the eggs, on each side of it; there were tiers of eggs on each side, eight in number, if I remember rightly,—I will have to think a minute or two, to get the number,—to find out how many tiers high they were. I rather think it was about fourteen."

He then repeated that there were fourteen tiers of eggs, and that the trays of eggs were superimposed, one above the other. That there were two tiers of eggs in a bundle or carrier, and that these carriers or bundles could be revolved so as to turn the eggs. These rooms were all filled with the same age of eggs. Then, being asked to describe fully the action of that incubator, he stated that,

"The air was driven down to the floor by the fan and came up around the eggs and led in between the columns of eggs. A small amount might go through the trays but a majority of it went up around between the columns."

Being further questioned, he stated that there was a corridor between the two rows of trays and that this corridor was much like the one shown in his patent here in suit in respect to size and position, but that there was no curtains in the corridor. Restates that there were never different eggs of different stages in any of the compartments of this incubator, but that all of the eggs were of the same age and set at the same time. Repeats that the eggs were in tiers of superimposed trays with the corridor between the tiers. Says the fan was suspended from the ceiling, and that the heating pipes were on the floor.

Then, being asked how the air got heated and circulated, he said that the heating pipes on the floor would heat the air there and the fans, driving it around these pipes, would make
the air pick up the heat from the pipes, and then it
161 would go to all the tiers of trays going up through and
mostly between the trays and then back to the fan and be recirculated. He states that the motor ran the fan at a speed of 1750 revolutions per minute, and as to temperature that the air was kept at about 100 degrees, under thermostatic control. Says that he did not humidify the air and had but very little ventilation in the incubator. Then the next two questions and the witness' answer thereto are here reproduced in full, to-wit:

"Q. How long did you commercially use that machine at Cleveland, Ohio, in that form that you have described?
A. Two years.
Q. Two years? A. Yes.
Q. And you sold the hatches did you not? A. Yes, sir.
Q. So that was for commercial use, was it not?
A. Yes, sir."

Then, being asked whether that incubator there commercially used by him, operated substantially in the same way as

the machine disclosed in his patent in suit, he answered that it did not. And then, being asked what the difference in action, if any, was and what caused the difference, he replied that

"The pipes, the heating pipes, were changed from the floor to the ceiling; we put in different ages of eggs in this machine".

States that it was in 1915 and 1916 and after 1914 that they had staged incubation.

Then, being asked whether or not the air circulation was not substantially the same in the two machines, his answer was in the negative, and then being asked what the difference was, he answered that he had one fan in 1912 and 1913 and three fans in 1915 and 1916.

162 He states that this machine, used by him in 1913 and 1914, in Cleveland, Ohio, was located in the German Lutheran Church on Madison Avenue, and that he believes the number of that church is 7918. He states again that in said machine, used at that place in 1913 and 1914, he had one fan in each of the compartments and that there were two sets of tiers of trays with a central corridor between the two, and that the fan was at the top of the corridor and the pipes at the bottom, and that the temperature was controlled by a thermostat and that the fan forced the circulation of air. Repeats that he did not use any curtains on that machine.

The next few questions and their answers read as follows:

"Q. How long did you continue to use that machine; you say you used it there in 1913 and 1914; how long did you use it?

A. In 1913 and 1914, we used the machine with the one fan in the center of the ceiling of each compartment.

Q. Oh, of each compartment?

A. Yes, and in 1915, we changed the machine, that is, we changed the inside part of it, without making very much change in the shell. We used it in 1915 and 1916 with three fans in each compartment, and the curtains, and stage incubation. We did not use stage incubation in 1913 and 1914.

Q. What time did you use it in 1915 first?

A. In the hatching season, beginning along about February or March."

Q. But, into that original machine which you brought from Attica in 1914 and 1915, you did put in three fans, did you? A. No; we had one fan in each compartment.

Q. Oh, but that made it three fans in the machine?
A. In the three compartments.
163 Q. In the three different compartments?
A. Yes, sir.
Q. And with those three fans, one located in each of the three compartments, was the circulation in effect substantially the same way as in the machine in your patent? A. No.
Q. What was the difference?
A. It was not sufficient; it would not be sufficient;—it would not produce a current of sufficient velocity in that other type of machine, but with the one age of eggs, or eggs that were of the same age, we had spaces between them, which would keep the air at a reasonably even temperature.
Q. And did you succeed in hatching eggs? A. Yes, sir.
Q. This machine as you then used it,—I mean the one that you brought from Attica, and as you used it there at Cleveland, Ohio, in 1913 and 1914, was open to the inspection of the public, was it not? A. Yes, sir.
Q. You did invite people to come there? A. Yes, sir."
Q. And, to your knowledge, were more or less newspaper articles, describing that machine, published in the daily papers of Cleveland, or some articles?
A. Yes, there were articles published."

The witness then identified the photostat of page 5 of the Sunday Cleveland Plain Dealer of February 23, 1913, and particularly the article therein appearing entitled, "Mammoth Incubator will Turn Out 20,000 Chicks Per Week", and states that he recalls that article as having been in that paper, and the photostat was offered and received in evidence on behalf of the defendant, and marked "Defendant's Exhibit A."

Then the witness next identified a photostat of page 5
164 of the Cleveland Leader, issue of Sunday February 22, 1914, and particularly the article therein appearing, headed "Cleveland Boasts Largest Hatchery", and stated that this article was published in that paper at that time, and the photostat was offered and received in evidence, on behalf of the defendant, and marked "Defendant's Exhibit B".

Then the last question and its answer read as follows:

"Q. Well, you know, Mr. Smith, that these articles refer to your machine, do they not, that you had there in Cleveland?
A. Yes, sir."

Samuel B. Smith's Testimony, Under Cross-Examination. (pp. 182-185).

Repeats that he did not have stage incubation in his Cleveland machine in 1913 and 1914. Repeats that the machine

had three compartments. That one compartment was loaded at a time and the compartments were generally loaded on the first days of the week and then the eggs remained in the respective compartments for about three weeks, or until they were hatched. Says the results were not quite as good as had been secured by him from the old type of sectional machines. The percentage was somewhere near the same, but a small percentage less, being about 40% to 45%. Being asked what the trouble was, he said that the eggs in that 1913 and 1914 machine would heat up too much at hatching time, would begin to heat up a few days before the hatching would come off and would get so hot that they had to open the door and blow air in to get rid of the heat. Said that chicks would die in the shells from overheating.

Being asked whether or not he had anything to do with preparing the copy of either of the newspaper articles that had been introduced in evidence, he answered

"They sent the reporter out to get some notes and he is the one that wrote it up."

Says he did not go over the articles before they were published.

Then, the further proceedings on pages 183 to 185 of the typewritten trial record were as follows:

"Q. Will you direct the Court's attention to that portion of the article in the 'Plain Dealer' of February 23rd, where it describes the manner of filling the incubator?

A. Shall I read this?

Q. Yes.

A. 'A big incubator is built with three compartments'.

The Court: Will you talk louder; we have a great deal of noise out here, Doctor, and it is quite difficult to hear when you drop your voice?

The Witness: All right. 'A big incubator is built with three compartments. Each compartment will hold 33,000 eggs. One compartment was filled last week. Another will be filled this week, and a third will be filled next week, and at the end of that time the first compartment will have hatched its eggs, and will be ready for filling again. In this way, after the first three weeks, there will be about 19,800 chicks put upon the market every week.'

By Mr. Ely:

Q. Now, at this date,—when was that with respect to any actual hatchings that you had at that time, at February 23, 1913?

A. There had been no hatching at that time; the first eggs had been set about two or three days.

Q. That was what you had hoped to get?

Mr. Williamson: That is objected to as grossly leading, your Honor. He is an intelligent witness, and is capable of answering a direct question.

The Court: Well, let him describe what it was.

Mr. Williamson: Without leading him.

The Court: From the testimony that they had not had any hatchings yet under that machine, and the statement was that the next week they would get so many chicks, and the next week so many chicks; I would draw the conclusion
166 from that, that it was a prophecy, as far as this testimony is concerned.

Mr. Williamson: A what?

The Court: It is a prophecy.

Mr. Williamson: Well, you said that he had not used it, or commercially used it?

The Court: Well, I am talking about that statement at that time.

Mr. Ely: That is counting the chicks before they are hatched. I think that is all."

Samuel B. Smith's Testimony. Under Redirect Examination.

The questions then put to the witness and his answers thereto, read as follows:

"Q. In the last question put to you you were referring to the article in the Sunday Plain Dealer, February 23, 1913, were you not? A. Yes, sir.

Q. Now the article in the other paper, to-wit: the Cleveland Leader, on Sunday, February 5, 1914, was a little more than a year later, was it not? A. Yes, sir.

Q. By that time you had successfully used that machine, had you not, for hatching eggs? A. Yes.

Q. And so that article that appears here, 'Cleveland possesses the largest hatchery', is based on information that you gave to that reporter yourself?

A. I couldn't say exactly that it is, because I don't remember all those circumstances back that far, but I have no reason to doubt but what it was."

167 E. H. SNOW'S Testimony. Under Direct Examination.

E. H. Snow, the defendant, called as a witness on his own behalf, testified to the following effect, reproduced part thereof in narrative form and part thereof in full.

States that he is forty-five years of age. Resides at Sleepy Eye, Minnesota, and is the manager and overseer of the Snow's business. This business has been conducted under the names E. H. Snow, Snow's Hatcheries, and Snow's Incubator Company. Has run his incubator business somewhat separate from the hatcheries to keep records and therefore, he calls the hatcheries "Snow's Hatcheries" and incubator business "Snow's Incubator Company". In his Hatcheries Company, he hatches chicks and in the Snow's Incubator Company, he makes and sells incubators.

Has been engaged in the incubating business since 1909. In the years 1909 and 1910, was in the employ of the M. W. Savage Company of Minneapolis, Minnesota, for the manufacture of the Jewell incubators. Thereafter, was at Wabasha, Minnesota, for a short time and then came to Sleepy Eye, Minnesota, where he has remained ever since. Left Minneapolis between 1911 and 1912.

Then his immediately following testimony, in full, pages 188 to 231, inclusive, of the typewritten trial record is as follows:

"Q. But you were engaged in the incubating business when you were here in Minneapolis, were you not?

A. Yes, at that time my first experience.

Q. In 1909? A. In 1909.

Q. Go ahead.

A. And I, being interested in the incubator business, I purchased many different types of incubators, such as at that time was known as the Wisconsin Incubator, the Buffalo Incubator, and Sure Hatch Incubator, the Wisconsin Incubator and different types of incubators, to satisfy myself on that problem. And later on I purchased the Boling Incubator, the James Way Incubator and—I can't just recall all of them and during these times I was in the manufacturing or ex-

168 perimental stage of building incubators. I built all types of incubators to try to the best of my knowledge to find out the best principle of incubation and up until the present time my incubator trays in the incubator of which I speak of, I worked on that incubator a long time and in—about 1929 I got it to where it was a good incubator, and to where I figured it was and to where it was better and could turn out good, healthy, quality, livable chicks. I was inter-

ested in the quality and the livability of the baby chicks, the livability being one of the main factors in my experience, and in all the experience I had. We had many difficulties in —we could hatch the chicks, but in the livability. So I built this said incubator, and this incubator is a—As you walk into it is one room, no partitions, no curtains, no deflectors or of any kind. The entire room is being kept at even temperature by agitators placed adjacent to the outer walls. These agitators are run at a low speed, the speed I try to run these at around 200 revolutions or round about 200 revolutions per minute, and which I found to be a good agitation and distribution of what you call of the air throughout this incubator. Then my—one of the main things was to place the trays in this incubator in order to save labor, in order to put them where they would hatch quality chicks and not be overheated, and to eliminate hot and cold spots such as has been found in many incubators. The air in this incubator during its agi-
tation is being agitated over and under the eggs on
169 what you would say a horizontal plane. This agitation
over the eggs in a horizontal plane does away with hot and cold spots in incubation, as I have tried that and tested that. The agitators are run on the outer wall where the air —adjacent to the outer wall where the air is more or less cooler and doing away with the exposed cold wall and eliminating the cold spots in the trays. Now in placing the eggs in this incubator it is not necessary at all to be lowered for the reason that the air is taken off of those eggs or agitated across those eggs and through to a certain extent on the horizontal plane. Therefore the eggs in the advanced stage of incubation do not get any warmer than the fresh eggs and the air is not forced from the advanced stage of incubation to the lesser stage by columns of air. It is merely agitated, and is agitated to the best of my ability. I built this incubator and I tried out every type of incubator that come to my knowledge. I built incubators with fans in them. I blew the air up and blew the air down; I blew the air sideways, and in other ways, but in all of my experience and what chicks hatched, I found no better chicks, no better incubation, no better incubator to handle, no easier incubator to operate in setting the eggs and taking off chicks than the incubator I have here designed. The eggs are placed in there in what you would say a sandwiched position. That is, we will say we will start here at the bottom
or the top—it is immaterial—but in my case I start at
170 the top and I have marks on the back of the incubator
showing the way I endeavor to set the incubator and have tested it out and have proven beyond a doubt and to anybody that—I have proven that point, that the way I have

set the incubator is the most practical and best way to run it, and that way is we place the trays, we will say one at the top, and skip two trays and place one more. That would be, we will say, the first of the month. Then we will wait three days and we will skip two more trays, and put in two more trays, on that date, three days in between there, and then we are down fairly well close to the bottom. That is on the—that would be on the—that would be on the 4th of the month, the second hatch. The first hatch would go in, we will say, on the first of the month, and then the following set would go in on the fourth of the month. Then we will wait three days later and we will go up towards the top again and start over, because there is a difference in the heat of the eggs there at the period of hatching time, or about the time when they began to throw off heat, we have a lapse there of a certain day's period, whereby it makes it possible to keep the eggs at a uniform temperature, and therefore, not being bothered with a lowering device or shifting device until the day of hatching time. The hatch time I would say—what I mean by hatching time is, we incubate to—it takes approximately 21 days to incubate an egg to get a chicken out of it. In about 18 days from the time we set these eggs they are taken
171 off, taken out of the setting comparment and placed in the nursery or hatching compartment so that the chicks can be kept separate and do not jump around in the incubator and can keep our chickens, the different breeds, in the different trays. We have this incubator thermostatic controlled. I worked on many thermostats and I have thermostats of my own design, and I have purchased thermostats. I am still working on thermostats. The thermostat that I have in many of my incubators are of my own design entirely. And the moisture—the incubator is also equipped with what you would call as near an automatic moisture device as can be procured, to the best of my knowledge. We have the evaporating pans and we have an automatic motor driven humidifier to take care of the moisture also, which can be set to keep the wet bulb at the degree of moisture which we determine is the best suitable for to produce a good quality livable baby chick. This incubator of mine does not require a lot of outside air or a lot of exhaust air out of the incubator for the reasons that the air is agitated over all the eggs and the chicks—the eggs do not become overheated and therefore it is not so necessary to introduce a lot of outside air. I don't know of anything else I can—

Q. Can you make a diagram illustrating to the Court, and making it more easy for him to understand, how you set the eggs?

A. Yes, I will just step right up here. There is twelve
172 trays of eggs, 1, 2, 3, 4, 5, 6, 7, 8, 9, 10, 11 and 12 up and down. We will start out by setting this one and this one. That is the first set on the first of the month. Then on the fourth we will set this one and this one—

Q. Give him the numbers.

A. Then on the next we will start back here. That would be there. That would be on the following. Then we will go down here. That is the set. Here is five and five. And the last set we will put in will be here and here. We can start here, but this makes it—this makes it uniform all throughout. This is marked on the back of my incubator, these numbers just like that. I will say again it is not necessary and we do not lower any eggs.

Q. Please place the days of the assumed month alongside of your numbers there. That will make it more easily understood.

A. This will be the first of the month. That would be the fourth, and then the next would be the seventh.

The Court: I guess you have got that wrong. This is the first.

The Witness: Yes, these two are the first of the month.

The Court: Then the next one would be—

The Witness: This would be 4. Then it would be the 7th, wouldn't it? That would be the 7th, and then the 10th would be the next, and then the 13th would be—13 would be
173 5—the next would be the 16th and two days later, three days later, we take them out and take them down.

The Court: That is three days later you take out those you put in first.

Mr. Williamson: The diagram made by the witness is offered in evidence on behalf of the defendant to be marked as Defendant's Exhibit C, egg setting sketch.

(Defendant's Exhibit C is marked for identification by the reporter.)

The Court: Egg setting plan?

Mr. Williamson: No, egg setting sketch.

The Court: Received.

Q. In what ways, with what material have you heated this incubator which you have described?

A. I have heated that by steam, and also by electricity. My experience in steam heated incubators, it is not necessary to have a large boiler in connection with the steam incubator and in using a small steam boiler, which I have a lot on some of my incubators, it is rather difficult to carry an even—what you would say a regular pressure. Say, for instance, you are running a pressure of about—you can't run too high a pressure on account of the thermostat in the incubator. I aim to run around 1½ pounds of steam and not over that, because I have an open tank on the steam boiler. Now in running the incubator on a pound and a half of steam it is very difficult to carry a uniform pressure of steam in a small steam boiler without watching the steam boiler
174 at all times because when you throw on coal the steam goes down and therefore you would have an irregularity in your incubator. I went—I set forth to develop an oil burner in order to take care of this boiler and carry a pound and a quarter to a pound and a half of steam, never dropping below a pound and a quarter and not going over a pound and a half, therefore in maintaining an even steam pressure of approximately a pound and three-eighths, or a little less than a pound and a half, I was able to keep a uniform temperature throughout my entire incubator. And I have not only put them on my own, but I have put them on others and that problem alone has solved a lot of difficulties in my incubator business. And it is the only type of oil burner and the only kind of oil burner, to the best of my knowledge, that has been offered to the trade or the only kind of an oil burner that would carry a low steam pressure to that degree to the best of my knowledge that is on the market today. I don't know of any but what will fluctuate from three to five pounds, and that is not good for the heating of an incubator. This oil burner I have developed myself, entirely myself, and have put it in use on my incubator which has been successfully in operation.

Q. When did you begin to make the electrically heated incubator?

A. The electrically heated incubator I come out with about two years ago.

Q. Why did you adopt the electrical?

175 A. The reason for adopting the electrical heated incubator is because you—it is a little more simplified, and about anybody can run it because you only have a switch to pull in and out and it makes it a little more convenient for the party that is unexperienced in the hatchery field.

Q. Have you got any of your own makes of incubators here in the city at the present time? A. Yes.

Q. Where is it located?

A. I have the incubator in the Annex of the Flour Exchange Building, 323 South Third Street.

Q. Third Street South? A. Third Street South.

Q. Is that an electrically heated incubator?

A. That is an electrically heated incubator.

Q. When was that machine made?

A. That machine was made in the year of 1930.

Q. Have you ever used it?

A. I used that incubator for demonstrating purposes.

Q. Where? A. At Sleepy Eye.

Q. What do you mean by demonstrating purposes?

A. I would heat that—run that incubator to show the operation and air movement and so on and so forth in my incubator.

Q. In dealing with prospective customers?

176 A. Dealing with prospects and also anybody that was interested in the incubator or hatching of baby chicks.

Q. Have you made any photographs of that electrically heated machine that you say is now located at 323 South Third Street in the vicinity of the Flour Exchange?

A. Yes. That is 323. I don't know if I said 223 or not. That is 323.

Q. I show you here a set of photographs and ask you to state whether you recognize the same or not? A. Yes, sir.

Q. What are they?

A. They are photographs of my machine at 323 in the Flour Exchange, Minneapolis.

Q. Did you see those photographs taken?

A. I seen those photographs taken.

Q. How many views have you got in your hand? How many photographs have you got? A. I have four.

Q. You can state just what the nature of the views are.

A. Do you want me to get up there and show them—

Q. Just state what one of them shows? A front view?

A. One of them shows a front view here, perspective, and the other one just a little angle of the front showing the motor and pulleys, and the cold air box, and one shows the interior of the incubator looking from the front through the door with the trays and everything in readiness to

177 start that incubator for hatching. On the one side it shows the trays removed and shows the location—

Q. Another view?

A. Yes, another view shows the trays removed and the location of the agitator behind the bars where the trays fasten in.

Q. Are held up?

A. Are held up, yes. Also shows the cold air openings in the rear of the agitator.

Q. You mean the air inlets? A. Air inlets, yes.

Q. Do the foul air outlets show any place in these photographs?

A. Yes, as you look in the incubator from the door—

Q. In the interior?

A. In the interior you will see the slides and then partly—which way this incubator is being operated, right in the middle of that aisleway, in the walkway, in the middle up overhead is the cold—is the warm air outlets or exhaust ports. It also shows the numbers on the rear of this incubator.

Q. Have you now got another photograph in your hand?

A. Yes, sir.

Q. Is that taken from this same machine? A. Yes, sir.

Q. And how does it differ from the other photograph that you had in your hand that was looking through the door of the machine?

178 Mr. Williamson: This isn't right, Ralph, you have the wrong photograph here.

A. This one—the difference here in this photograph shows the moisture pan removed from underneath.

Q. One of them?

A. One of the moisture pans removed and the other photograph shows with both of the moisture pans in.

Q. And why was one of the moisture pans removed?

A. To show the heating elements, radiating elements, which the incubator is being heated by.

Q. How many views does that make that you have, four of them, five? A. Five, yes.

Mr. Williamson: The five photographs identified by the witness are offered in evidence on behalf of the defendant and will be marked as Defendant's Exhibits D-1, D-2, D-3, D-4 and D-5.

(Defendant's Exhibit D-1 to D-5 inclusive are marked by the reporter for identification.)

The Court: Received.

179 Q. Now, as I understand it, this machine here in Minneapolis is an electrically heated machine?

A. Yes.

Q. Did you have an incubating machine which you designed and manufactured in the basement of your building at

Sleepy Eye, Minnesota, at a time last fall when Mr. Ely, counsel for the plaintiff, and Mr. Taggart, their expert, came to your place at Sleepy Eye to see it? A. Yes.

Q. Is that a steam heated machine? A. Yes.

Q. Have you ever had a photograph of that machine taken? A. Yes.

Q. Have you got the photograph in your hand there?

A. Yes.

Q. How many views? A. We have three here.

Q. State what they are.

A. We have a front view, or front and side view, and then there is a view through the center showing myself.

Q. Through the door?

A. Through the door down the walkway was myself, with a tray of eggs, and then we have the same view without anybody being in the incubator, showing the floor and the ceiling to a certain extent, and the back wall and the sides—and the front of the trays.

180 Mr. Williamson: The photographs identified by the witness are offered in evidence on behalf of the defendant, to be marked as Defendant's Exhibit E-1, E-2 and E-3, the photos of the Sleepy Eye machine.

The Court: Received.

(Photographs referred to marked by the reporter for the purpose of identification as Defendant's Exhibit E-1, E-2 and E-3.)

Q. State whether or not that Sleepy Eye specimen of your machine, whether or not it is electrically heated or steam heated? A. It is steam heated.

Q. Please state whether or not that steam heated machine in the basement of your building at Sleepy Eye, was tested at the time Mr. Ely and Mr. Taggart were there on behalf of the plaintiff, and myself and Professor Rowley on behalf of the defendant? A. Yes, it was.

Q. State whether or not after the defendant got through making the test, counsel and Professor Rowley got through making their test of that machine, whether or not Messrs. Ely and Taggart were permitted to make tests on behalf of the plaintiff? A. They did.

Q. You saw those tests, did you?

A. I did. I was there.

181 Q. Now, what, if any, is the difference between this machine of yours at Sleepy Eye, this steam heated machine, and this electrically heated machine, which is here on the first floor of the Flour Exchange at Minneapolis, at this time?

A. There is very little difference.

Q. What is it?

A. There is a slight difference in the height, and a little difference in the nursery or hatching compartment in the bottom where the finished eggs, you might say, are put in, and a little difference in the measurement, a slight difference, and I don't know if the fans are about the same. I never measured it, but the difference in the entire incubator is very slight, and in fact, nothing to make a material difference.

Q. I suppose you mean with the exception that one is electrically heated?

A. One is electrically heated and one is steam heated, but we run the temperature to the same degree of heat in both the electric incubator and the steam incubator, and all the difference is one we run with a steam heated oil burner proposition and the other we run with electrical heating elements.

Q. Is there any difference whatever in the operation so far as the circulation of the air is concerned?

A. No.

Mr. Williamson: Counsel offers in evidence on behalf of the defendant the electrically heated specimen of the
183 Snow Incubator now located on the first floor of the
182 Flour Exchange, at what is the number?

The Witness: 323.

Mr. Williamson: At 323 Third Street South, Minneapolis, Minnesota, with the understanding that it will be necessary for Mr. Snow to commercially use this machine during the coming hatching season, and to prepare for it, which, I believe begins in February and extends through March, June and July, is that right?

The Witness: Yes.

Mr. Williamson: The same to be marked as Defendant's Exhibit F, with the word "Snow's Electrically Heated Incubator."

The Court: That will be received.

Mr. Ely: I ask the same permission to remove that Smith Incubator we had over in the warehouse where we saw it in operation.

The Court: I will permit that be done.

Mr. Williamson: How about the Plaintiff's model of the Snow machine? Do you want permission to use that too?

Mr. Ely: Oh, no.

Q. Now, why did you not bring down here your steam heated specimen of your incubator, which was located in the basement of your building there at the time Mr. Ely and Mr. Taggart were present at the tests this fall?

A. That incubator is built into the building, and was
183 built there stationary and the only way it can be taken out is to be all sawed in pieces, which would practically ruin it because it would not have air tight joints thereafter, and therefore, I brought the knock-down machine, which could be moved from one place to another, and all those machines have all been built knock-down.

Q. You mean your electrically heated machine?

A. Yes.

Q. State whether or not any of the parts that were used by you on the Sleepy Eye specimen at the time Mr. Ely and Mr. Taggart were there, at the testing of that machine, have been placed by you on this electrically heated machine, which is now on the first floor of the Flour Exchange?

A. Yes.

Q. Specify the parts.

A. I figured in order to save argument, I brought down the same pulleys and the same belts and the same motors and put them on this machine here, so it would be run at the same speed, and there would be no argument as to the identity of the incubator. I also brought down the same trays that are in that incubator, and everything I could take down easily, because it is all interchangeable,—the same pulleys and the same motors and the same belting and the same trays and the same end gates for the nursery department and everything practically I could bring down, I brought down for this incubator and which was used on the incubator at
184 Sleepy Eye in my basement of my building.

Q. State whether or not after this electrically heated specimen of your incubator was located here at the place you have stated in Minneapolis, tests were made on behalf of the defendant of that machine to see what the air circulation was in that machine? A. Yes, it was.

Q. When were those tests made?

A. Well, those tests were made day before yesterday.

Q. Monday, wasn't it?

A. Those tests were made on Monday.

Q. Last?

A. Yes, they started,—I don't know just what hour they started.

Q. Well, that doesn't make any difference. They started on Monday of this week.

A. Yes, Monday of this week.

Q. Was Mr. Ely and Mr. Taggart there on behalf of the plaintiffs?

A. They were there all the while.

Q. Who else was there?

A. Mr. Ely and Mr. Taggart and Mr. Williamson.

Q. Which Williamson?

A. Mr. James Williamson and Mr. Ralph Williamson and Mr. Rowley and myself.

Q. Wasn't Mr. Taggart and Mr. Ely there?

185 A. I stated that Mr. Ely and Mr. Taggart were there.

Q. And Mr. Olson, of Paul, Paul and Moore?

A. Yes, and Mr. Olson was there. I didn't remember his name.

Q. Was Mr. Rowley there?

A. Yes.

Q. Who was in charge of the tests?

A. Professor Rowley.

Q. On behalf of the defendant?

A. Professor Rowley.

Q. The gentleman sitting here in the court room?

A. Yes.

Q. Were Messrs. Ely and Taggart present throughout the making of it, of the whole of those tests? A. Yes.

Q. Were they given opportunity to make tests of their own, if they so desired, after the defendant got through?

A. Yes.

Q. Now, just describe in your own way the air circulation in your incubating machine that you have made and used. I want the air circulation. What is the means for the air circulation or what air circulation have you gotten there in your steam heated incubator, or your electrically heated incubator? Perhaps I ought to ask you, you have already testified, have you not, that you have several of these steam heated incubators in actual use?

186 A. I have some.

Q. How many?

A. I have four.

Q. That were made and used before this suit was brought?

A. Yes.

Q. Now, just describe in detail in your own way, based on your own experience, with the machine, just how the air is circulated in your incubating machine.

A. Well, in the incubators, the electric and the steam, the air is circulated the same in both of them. That air, as I said before, is agitated by agitators adjacent to the outer wall in the cooler spots of the incubator, as it would stand to

reason, the cooler places would be on the outer wall. That air is being agitated by the four bladed agitators, and run at a low speed, which, as we hope to run them, at about 200 revolutions per minute, or around there. There is some outside fresh air taken in through openings on the side, which is above the center of the agitators; they running at a slow speed causes a certain distribution of the air throughout the incubator, which works and goes out and expels somewhat from the end, and somewhat towards the front and somewhat going back towards the eye of the fan, and, therefore, causing a complete mixture and agitation of the air in the entire incubator. The air is moved over and under the trays and in some places it may have a slight outer movement, but the main movement of the air is more
187 on a horizontal plane in that incubator, and, therefore, eliminating any hot or cold spots, and causes the chicks to hatch at the same time,—at the same time in the trays, that are set at the same time, and by having no cold spot or hot spot in the incubator, you get a better quality chick and a better livable chick and a better looking chick, than one which is not properly hatched. There is somewhat greater movement of the air around the outer wall,—the entire outer wall and the ceiling and all, to a certain extent, which takes care of any exposure and makes it possible to carry an even temperature throughout the incubator.

Q. Is there any column of air?

A. There is no columns of air because it is not necessary to have columns of air, in that incubator. It is simply made on the principle whereby the air can be agitated and moved between the trays at a slow movement to take off any excess warm air that might be there, or any cold air, and it is not necessary to have a large volume or current of air forced in any way through or on the hatching trays or in that incubator.

Q. Did the test that you saw made of these incubators of your own, either the steam heated one at Sleepy Eye, or the electrically heated one here in Minneapolis, give you any reason to change your own theory of the operation of the air circulation in your own machine?

A. Not in the least.

Q. Did it tend to corroborate your own theory?

A. No,—what is that?

188 Q. Did the tests give you any reason to change your opinion of the air circulation in your machines?

A. No.

Q. Did you hear Mr. Taggart testify on behalf of the plaintiff in this case? A. Yes.

Q. He made some remarks in his testimony about the rate of speed at which your agitator turned, or what he called fan turned in the Sleepy Eye test, when it was tested there at the time he and Mr. Ely were there last fall, and the fans or agitators on your electrically heated machine here in Minneapolis. Do you remember that? A. Yes.

Q. In the actual commercial usage of your machine, did you always run these agitators at the same identical speeds?

A. These agitators are hooked up with V-shaped belting, and is run from one,—both agitators on one side,—two agitators on one side, that is run from one motor by a V-shaped belting, and these V-shaped belts, of course, cause more or less slipping and there may be a difference in these agitators, but it does not make any material difference in the incubator, because the air is moving in different ways in that incubator, and it does not make any material difference whether the agitators are running at 165, or such a matter, to 208. We aim to run them around about 200 revolutions per minute,

189 and that incubator that I have in the Flour Exchange would be run exactly the way it is now and will be sped exactly the way it is now. The incubator that I have in the Flour Exchange will be run and operated,—the motors will be run at the same speed they are now, as to the best of my knowledge, because they are hooked up by electrical current, and the belting will be put on the same as it is now, and the pulleys will be the same as they are now, and the incubator will operate the same as it does now, which is the condition and the operation of all my incubators.

Q. Did you ever purchase from the Smith Incubator Company any specimens of the Smith incubators? A. Yes.

Q. Which was marketed under this patent here in suit?

A. Yes.

Q. When did you get your first one?

A. About along in 1924.

Q. How many have you bought from that concern?

A. About twelve.

Q. Did you put them into use? A. Yes.

Q. Here in this state?

A. Yes,—not all in this state. Two in South Dakota.

Q. You put several to use in this state, did you not?

A. Yes.

Q. When did you put the first one into use in this state?

A. Along in 1924.

190 Q. Have you got in the City of Minneapolis at this time any one of those Smith incubators that you bought from that concern? A. Yes.

Q. Where is it located?

A. It is located in 323 Annex of the Flour Exchange in Minneapolis on Third Street.

Q. Is it in the same room where your electrically heated incubator is located at this time? A. Yes.

Q. How long have you used that particular machine in your incubating business?

A. We have used that off and on,—off and on since,—I will figure from the time I got that,—that was in, about 1926, —1925, I believe,—1925 is when I got that incubator. That was one we had at Mankato and I purchased them in 1925.

Q. You have been using it ever since? A. Off and on.

Q. Have you any photographs of that specimen of machine? A. Yes.

Q. Please inspect these which I have and state whether or not you recognize them? A. Yes.

Q. Are these photographs of that machine? A. Yes.

Q. Were they taken in your presence?

191 A. Yes, sir.

Q. What are the different views?

A. We have a front view on the door,—the door is closed, showing the name plate of the Smith Incubator Company. Then we have a view looking down the corridor.

Q. Through the door?

A. Through the door with the curtains,—it shows the curtains and the rear of the incubator and the fan panels and the thermostat and the floor and the nursery department. Another view,—one of the views is in the fan panel, which is let down, showing a cold air intake, and also shows the side walls of the incubator,—the curtains, which act as a part of the partition and the floor and the rear wall.

Mr. Williamson: The photographs identified by the witness are offered in evidence on behalf of the defendant and are to be marked Defendant's Exhibits G-1, G-2 and G-3.

(Photographs referred to marked by the reporter for the purpose of identification as Defendant's Exhibits G-1, G-2 and G-3.)

Q. State whether or not this specimen of the Smith machine shown in these photographs, and located in the same place as your electrically heated Snow incubator is, was also tested on Monday last, in the presence of counsel for the plaintiff, Mr. Ely, and their expert, Mr. Taggart?

A. Yes.

Q. And others? A. Yes, sir.

192 Q. Who made those tests?

A. Mr. Ely was in charge,—I mean Professor Rowley and Mr. Ely, and Mr. Taggart, and myself, and Mr. James Williamson and Mr. Ralph Williamson were all there.

Q. All there at the tests? A. Yes, sir.

Q. After the defendant got through making the tests it desired to make, was Mr. Ely and Mr. Taggart given a chance to test that machine? A. Yes, sir.

Q. Did the operation of that machine, as then tested, give you any reason to change your theory of the operation of that machine, from the one that you had formed from your long experience with it? Did it give you any reason to change your theory of the air circulation? A. No.

Mr. Williamson: The said specimen of the said Smith machine, now at the place identified by the witness, in Minneapolis, is offered in evidence on behalf of the defendant and is to be marked, "Defendant's Exhibit H, Snow's Specimen of the Smith Machine."

Your Honor, it is now five o'clock. May we adjourn?

The Court: Yes.

(Adjournment taken until 10 o'clock A. M., November 18, 1932.)

---

193 November 18, 1932,
At 10 o'clock a. m.

Hearing resumed pursuant to adjournment.

Court and counsel present.

Mr. Williamson: If Your Honor please, I just wish to add to the record that the exhibit machine, offered near the bottom of page 213 of transcript, to-wit: "Defendant's H, Snow's specimen of the Smith machine," was offered on the same understanding that I had about his own Snow machine, that Mr. Snow used commercially, that it is subject to Your Honor's inspection at any time that you desire.

The Court: Yes.

Earl H. Snow, recalled, testified as follows:

Direct Examination (Continued).

By Mr. Williamson:

Q. Mr. Snow, is that specimen Smith machine, which was offered in evidence when you were last on the stand, and just

before adjournment last night, and which is marked "Defendant's Exhibit H, Snow's specimen of the Smith machine," in the same condition now that it has been throughout the time that you have used it, wear and tear excepted?

A. Yes, sir.

Q. Mr. Snow, will you please describe in your own way the air circulation in that particular specimen of the Smith machine, and all the Smith machines that you ever used commercially, as based on your actual experience in
194 the handling and usage of these Smith machines?

A. In the Smith machine you will find,—as you walk into them, you will find an aisle way, or corridor, partitioned off by curtains to each side of you, and making an incubator with four partitions, you might say, the two side wall partitions and the fan panel gallery partition. As you walk into this incubator, on each side you will find heavy curtains, acting as partitions in that incubator; and back of these curtains you will find tiers of eggs or trays there located.

The heating elements and heating pipes and cooling pipes are overhead, above, right close to the fans, very close to the fans, and are partitioned off from the rest of the incubator by the beams and fan panels.

The air in that incubator is forced, or is created by a high speed fan, which is timed to run at practically 1800 revolutions per minute. With a load, it is sometimes reduced to 1750, but they run at different speeds, because they are not that perfect. But the speed of that fan, in ordinary terms, is supposed to be 1800 revolutions per minute. There are four of these fans in each incubator, and those fans running at that speed cause a large volume,—a forced circulation,—a large volume of air coming down through this corridor, forced down through this corridor and aisle way, down to the floor, where it is mushroomed, and some of it coming down underneath the hatching trays, and some of it turning underneath the edge of the curtains, and thereby going
195 up in between the tiers of trays. This is done constantly by the continual operation of these fans; they are not supposed to be stopped; the partitions are not supposed to be removed, or the curtains removed, as a part of the partitions are called curtains, heavy curtains. The eggs in this incubator are set at the top, that is, fresh eggs are set at the top, and the instructions by the Smith Incubator Company are to set them in this incubator, two trays at a time around the top of the incubator. And their instructions are also to set this incubator twice a week; and as you put

eggs into the incubator, and as incubation proceeds, you are to wind down, or to lower down by the mechanical lowering device; it is lowered down with a crank and sprocket, which is run by an endless chain, fastened thereon, and the eggs are lowered down from time to time, as the setting goes on. As the setting is twice a week,—at the end of the period of around about the sixteenth to the eighteenth day, in there, the eggs have reached the bottom of the endless chain. It is absolutey necessary to lower these eggs in the Smith incubator to get any kind of hatching at all. It is absolutely necessary to lower those eggs or the chicks that would hatch from those eggs would not be any good, as we tried that out. They will overheat in the period of incubation from the top to the bottom, if they were not lowered, and thereby overheating would cause a disorderly or a very bad situation in
the hatching of these chicks, and the amount of chicks
196 hatched, if they were not lowered, would be a very
small percentage, and the chicks that would hatch would not be liable to live, and there would not be very many salable chicks hatched out of that incubator. Therefore, they have made that incubator with these chains, and the chains run down the center of the tray, so that it is practically impossible to get a loaded tray of eggs out of that incubator, from the time you set it until the time you take it off at the bottom. They don't plan on taking it out; that is not their instruction. If you were to try to take them out anywhere in between the top and the bottom, you would be liable to break all the eggs in the tray, and break possibly other eggs in the other trays, in endeavoring to take the tray from the setting chains. As far as egg shells are concerned, as to being handy or taking the trays off from the bottom, there are no chicks hatched in the setting chains; there are no egg shells in the setting trays on the top chains, because if there were, the chicks would jump around in the incubator, and would not be in a position to be treated, or take care of the different chicks. It is absolutely necessary to take these trays off before the end, or before the twenty-first day,—it is necessary to take them off at about the eighteenth day, and put them in the hatching compartment; it is absolutely necessary to take these eggs off of the setting chains, and place them in the hatching compartment, in order to keep
the chicks in the trays, where the eggs are set, and in
197 so doing there is underneath,—put in the trays, and
put in the nursery department, where the chicks can be kept in the trays; they are not supposed to be hatched in the chain, and they are not hatched in the chains, in the

Smith incubator, in accordance with everything set forth in the recommendations from that company. Therefore, there are no egg shells or anything of that kind in the setting chains.

The air in that incubator is forced to the bottom, and is taken off from the chicks, and goes to the,—or is taken off from the eggs in the more advanced stage of incubation; it is absolutely necessary to force it up through the eggs in the lesser stage of incubation, by the method of this forced draft and circulation coming down through the corridor, at a distance of around six feet, or such a matter,—coming down and going underneath and up through these trays.

If the eggs are not lowered so that the heat is driven off from the eggs in the advanced stage, which we will say would be eighteen days along, they would become overheated up in the incubator, because the farther you go up in the machine, the more liable there is to be less travel of air; it is slowed up considerably, and there is liable to be hot spots.

Now, in the trays on the ends, or, I will say, on the back wall, the tray that is next to the back wall of the Smith incubator, will hatch many times a whole day later than the rest of the trays, and you will also find the back end of
198 many, many trays hatching much later; and it is necessary in lots of instances to carry over, and to take out those eggs, and place them in a different tray, and stick them somewhere else in the incubator, to get out the balance of the chicks. Those chicks are not the best chicks, because they are not hatched right. Lots of chicks,—in all of our experience, there are lots and lots of eggs throwed out, due to the fact that they are not hatched in time, and therefore go into the garbage can before the chick gets out of the shell.

Now, in this incubator, it is also necessary, and which we have practiced, to do what is called shucking the chick, that is, it is necessary to go through the trays and hatch the chicks out of the shell. If you don't do that, you are going to throw out considerable chicks. These chicks are the weaker ones, because of what I would say is improper incubation. If they are not helped out of the shell, you lose a tremendous lot of chicks. In fact, some hatcheries have a slate on the wall. On this slate, they will say, where they have more than one machine: "Shuck Number 1," or, for instance, they will say, "Shuck Number 2." By that, they mean, to go through the trays and to help out these chicks, and take out the egg shell off from them, so that they can get out of the shell.

This incubator also must be operated with the right amount of air coming in, or the right amount of air in
199 the hatchery room, to produce a good quality of chick. If that is not done so, by the way or ways that the air travels, you will have sticky chicks; it seems the down of the chick lies close to the chick; and they are not a good, respectable looking chick, if the incubator is not properly run, as to the air intake and the air in the room, that is, what I would say good air,—I will say good air in the room, and also fresh air coming through and distributed in through the incubator.

In this incubator we have found, with reference to the men that I have working in it, that they do not care to work in the incubator. I have had many of my help reject working for me, if they were to work inside of this incubator, due to the fact that a large volume of air is forced down upon their heads, and causing drafts and discomfort in the incubator. After a person gets used to it, it is not quite so bad, but it is rather uncomfortable, which would be shown in coming in a temperature of approximately ninety-nine degrees, and a humidity which averages from eighty,—a humidity that runs about approximately eighty-four at a wet bulb reading. With the humidity at practically eighty-four, and your temperature at ninety-nine, and with the air traveling such as it does in the Smith incubator, it is a rather uncomfortable situation; it is not very nice to be obliged to work in that machine any length of time.

Q. As that Smith incubator is organized in the speci-
200 men used by you, did you ever attempt to use it without curtains in the corridors? A. No.

Q. In your judgment, could it be used without those curtains, successfully?

Mr. Ely: I object to that as speculative; the witness is not qualified.

Mr. Williamson: I think it is a proper question, Your Honor; he has had a very large experience in the incubating business.

The Court: Of course, the credibilty of the witness is measured by the reasonableness of his testimony. I will let him answer, but if he states it without reason, why, it is open to objection.

A. What is the question, please?

(Previous question read by the reporter.)

A. No.

By Mr. Williamson:

Q. Why not?

A. Because it would permit to let air go in different directions, and would not reach the bottom stage of incubation, forcing the air around and taking the air from the advanced stage of incubation up through the others, and would be liable to cause what I would term irregularity.

Q. Irregularity in what?

A. In the incubator throughout.

Q. In the hatching?

A. Yes, in all phases of the incubator. It is made with
201 partitions, or with curtains, and they are made there to be used that way, and they have been proven out, that that is the way that they endeavor to run the Smith incubator.

Q. What is the strength of the currents of air that are forced down by the fans in the Smith incubator, if you know?

A. Well, I would not just know the strength, but I know there is a large volume of air. These fans travel at, say, 1700 or approximately 1750 revolutions per minute, and there are four of them; there is a terrific volume of air coming down, and, of course, it continues to come down through that corridor until it reaches the bottom of the incubator, at which it must, in order to succeed in hatching the eggs in the incubator.

Q. How about the velocity of these columns of air?

A. Well, they are running at a high velocity.

The Court: You are speaking of the Smith incubator?

The Witness: Yes.

Mr. Williamson: Yes, certainly.

By Mr. Williamson:

Q. What is your answer?

A. I would say a large velocity.

Q. A high velocity? A. Yes.

By the Court:

Q. I suppose the forced air in that incubator could be increased or lowered by the fans,—that is, by running them faster or slower?

A. Well, you could not run the fans any faster or any slower, because there is no rheostat; the fans come
202 running just the way they are with them open, and there is no means, or no way of slowing them down or speeding them up; they run at an equal given speed, at which

it is timed to run, or the given speed of the fan is 1800 revolutions per minute, and, of course, under a load, they vary.

Q. Well, of course, the fans could be regulated so as to have a variable speed?

A. I suppose so, if they are made. But if the fans in the incubator do not rotate with sufficient velocity to carry the air to the floor, and come up between the trays, the incubator would not work satisfactorily, because the eggs would overheat back of the partitions or curtains.

Q. Have you had any experience in your handling of the Smith incubator, where the eggs were overheated?

A. (Witness hesitating) Well, to a certain extent.

Q. What was the nature of this experience?

A. Well, if the eggs are not lowered down, or are left,—are not lowered down and the bottom was taken off,—

The Court: (interrupting) Just a minute. Pardon me, for a moment.

(Previous answer read by the reporter.)

A. (continuing) If the bottom eggs are not taken off, and they are not lowered down in the proper way, which is set forth, they would be liable to overheat.

By Mr. Williamson:

Q. In your experience with the Smith machine, were any of the eggs spoiled, so that they would not hatch, or
203 get good chicks, because the eggs were too cold?

A. Yes, sir.

Q. Explain that, so the Court can understand it.

A. The trays, especially on the ends of the incubator, and especially on the back of the incubator, the rear wall, in many cases we have found that there were eggs in there that did not hatch, for the reason that it must have been due to lack of temperature, and there were eggs at the end of the tray that would not hatch. We found that what would hatch on lots of the ends, and especially at the rear of the incubator, would, in lots of cases, come out later.

Q. Why not?

204 A. The reason for the delay of hatching would be due to improper temperature and most likely it would be cooled down because by speeding up them,—by raising the temperature in the incubator, it will make the eggs hatch sooner, and by running your incubator a little slower, it will cause the eggs to hatch later and, therefore, it would go to show that these eggs would not be kept under proper temperature,—if they would, they would hatch at the same time,

and, therefore, it must have been due to too cold,—due to the outside walls of the incubator.

Q. Why did you design and make and put into use your own incubator?

A. To get a better incubator.

Q. Better than what?

A. Better than any incubator that I have used, in any sense of the word, and I have used quite a lot of incubators.

Q. How about others on the market?

A. Well, I claim to build a better incubator, better than I ever used.

Q. State in what respects your own incubator is better than the Smith you used so long.

A. In the first place, my incubator has a one room proposition,—there is no partition of any kind; it is easy lighted so you can see; the eggs are handled easier; it can be run and operated by a woman or a lady; it can be set easier; it can be cleaned out easier; it can be sprayed with, or fumigated
205 easily, and it can be handled in all respects in incubation, to the best of my knowledge and to the working ability, as I have found it, easier, and it is more simpler in all respects, so far as the incubating of eggs is concerned.

Q. How about the circulation of the air, compared with the Smith?

A. The thing was to get away from cold spots and hot spots in the incubator. My main thing I set forth to do was to hatch eggs to produce the best quality livable baby chicks,—chicks that I could recommend to my customers, and build up a future trade; chicks that would live, and chicks that do not live for me, cannot live for my customers and we hatch many thousands of chicks in our hatcheries, self started chicks, and, therefore, we must have a chick that can live, and what I have set forth to do was to build an incubator better than anything I have ever used at any time before. In this incubator that I built, I built many different kinds of incubators. I tried out different methods at different times down through the years of my experience, and I finally got to the point where I used agitators and placed them adjacent to the outer wall, running at a low speed, and which they are only about three inches or such a matter from the eggs, the egg trays. The air has only got to move three inches or more from the agitators before they are beginning to come into contact with the eggs in my incubator. The main thing in in-

cubating is the hatching of eggs. That is what we are
206 interested in, in the hatching of eggs in the incubator.
We do not care about aisle-ways, corridors, partitions, or wood ware. We are materially interested in the hatching of chicks, or the hatching of eggs, and therefore, it is the eggs that we are particularly interested in and to keep those eggs at a uniform temperature throughout, and in order to do that in a way that will produce the best chicks. I set forth, in putting these agitators in my machine, running at a low speed, which was only necessary to run at a low speed, but on account of being in the cold spots of the incubator, which is on the outer wall,—that would stand to reason, the colder spots of any building or incubator is the exposed wall. I also attempted to put in there and create a little larger movement of air around the outer wall in all respects in order to take care of the cold spots that may be lingering along the walls, and then keeping a uniform temperature through the hatching egg chambers in my incubator. It is a more easier factor to keep an even temperature in those eggs when you are in close contact with those eggs than if you are a long distance from those eggs, and take, for instance, you hope the air will strike them, but, in my own experience I determined to put that in operation where I was sure of having the air movement to take care of any hot or cold spots, and, therefore, let the air go across the eggs in different horizontal positions because the eggs are stacked one on top of the other, and it would stand
to reason that the air taking off on a horizontal posi-
207 tion would be more in effect of keeping a uniform temperature than in any other wise. In this incubator of mine there is many, what I would say improvements and many things that you will find in no other incubator. We find in that,—the chicks that hatch from that incubator are a superior chick. They are not necessarily,—we do not recommend any shucking or any chickens picked out of the shell. A chick that cannot pick the shell and jump out of the shell is not a good chick, and, therefore, we do not recommend any shucking of our chicks. A chick that cannot get out of the shell in my incubator, we do not want him. The reason for the quality of chicks is due to the method in which the incubator,—in the method of the incubation and the method in which the incubator is run, and the method by which the air is taken care of inside of that incubator.

Q. How about the humidity?

A. The humidity,—I have tried different sets of humidity with wet bulb readings,—I have tried that at different sets. I have in Sleepy Eye just a place where I build and rebuild and reconstruct and dismantle and tear down incubators and

test them out to my satisfaction, and I have done that through on down the time that I have been in the incubator building business since 1909, to prove to my own satisfaction the best method of hatching eggs. I have used different kinds of heat; I have used different kinds of moisture devices that has ever come to me, such as from evaporation, and
208 vaporizing, and a motor, such as I have today in my electrical incubators.

Q. In your machine you have two agitators on each of the opposite side walls, have you? A. Yes

Q. Why did you dispose of your agitators in that way?

A. Because I wanted to get the movement of air along on the outer wall so that it would keep a uniform temperature through the egg chambers and take care of any air,—cold air that would be on exposed walls, and keep this air in movement, which was a hard thing to do along any wall, and, therefore, maintaining a mixture of the air, which goes in all directions in that incubator, which is agitated, and some air in that incubator goes from across,—that is due from the agitation.

Q. Some of it will come across what?

A. Some goes across the incubator in one way and some across the incubator in another way.

Q. In what direction?

A. All directions, which we can show you.

Q. How about in the corridor?

A. In the corridor, the air, as we have found it, does not make any definite path; it is churned in there, which we can show you by a smoke test, and which we have proved beyond a doubt to satisfy ourselves there is no current of air in the corridor going in a specific way, but is churned and brought in and brought out in all directions.

209 Q. Have you found in your experience with your own machine that you have any cold or hot spots, compared with the condition of other parts of the incubator?

A. We do not have no hot or cold spots in my incubator; that is, not hot or cold spots that would cause any damage whatsoever; that would amount to a trifle.

Q. Is that due to the more thorough circulation of your air?

A. Yes sir, and the air not being driven such a long distance.

Q. Were you in the habit of keeping records of the percentage of hatches in your usage of the Smith machine?

A. Well, we kept certain records. We can give you a brief estimate of how our hatches run. We have in the Smith incubator, where one hatch would hatch fairly good, and the

next time not so good and it seemed to keep on,—you could never rely,—in fact, we put in our incubators what is called custom hatches,—we take the eggs in from the farmer, and place them in that incubator for hatching. This farmer gets back the chicks we hatch out of there. We charge him per egg for hatching those chicks. That is what is called custom hatching. We could never guarantee and never could know what kind of a hatch you would get out. We have never been able to get two hatches alike.

Q. In the Smith machine?

A. In the Smith incubator, not in the history of my business.

212 Q. What was the percentage according to your best estimate,—I mean the percentage of hatching to the eggs that were set?

A. We place our hatchable chicks,—we will go to work, and we will say we have orders for chicks, and we will base that on 50 per cent of the eggs set.

Q. That is in the Smith?

A. In the Smith incubator, and we have done that ever since we have operated, and not only will I tell you that, but every one of my help, and every one of my organization will tell you the same story.

Q. What percentage do you get from the usage of your own machine?

A. From fifty on up to sixty and sixty-five.

Q. On an average?

A. On an average, but we also base our hatches in my own incubator around 50 to 55 and 60 per cent. We have found in the operation of my incubator, they are claiming very good hatching.

Q. What do you call a good hatch?

A. I call a good hatch 65 to 68 per cent.

Q. What do you call a poor hatch?

A. I would call a poor hatch around 40 per cent.

Q. Were you ever able to get as high a percentage of hatched eggs, with the use of the Smith machine, as you have with your own? A. No.

213 Thereafter, on pages 241-245, inclusive, of the typewritten trial record, this witness testified to the following effect, to-wit:

That in the season of 1928-1929, he had used, at Sleepy Eye, Minnesota, a specimen of the Boling incubator. States that date from memory only. Being asked to describe that incubator, he says that it was an incubator with a corridor and trays on both sides, with the trays at different levels. Thinks

the trays held about 220 eggs each. There was a fan in the corridor, which blew the air toward the top of the machine, where is was re-circulated and came down through the eggs to the bottom and back to the fan again. The heating element was directly below the fan in the corridor and the circulation of that machine was a forced circulation, something on the principle of the Smith incubator.

He then identified a drawing taken from the transcript of record on appeal to the Sixth Circuit Court of Appeals in a case entitled "Buckeye Incubator Company and Samuel B. Smith, appellants, vs. Bert W. Boling, appellee"; and stated that this drawing correctly illustrates the Boling machine used by him. This drawing was first offered in evidence on page 244 of the trial record, but not there marked; and it was again referred to and reoffered in evidence on page 615 of the trial record and marked "Defendant's Exhibit U, Drawing entitled 'Incubator of E. H. Snow, Sleepy Eye, Minn.' ".

E. H. Snow's Testimony, Under Cross-Examination.
214 (pp. 245-267).

States that his steam-heated incubator, located at Sleepy Eye, Minnesota, was the first machine of that type made by him, and thinks that this was built in the fore part of the year 1929, but cannot fix the date exactly. Says that Sleepy Eye machine has the numeral 1 on the door thereof. Can't state whether he first used that machine in 1929 or 1930. Repeats that he built three more steam-heated machines, but can't remember the dates.

Says he tried out his first incubator before he built any more, and that he always tried out each new incubator made by him. Cannot remember how many hatches he made on his first steam-heated incubator, before he continued to make more, but he made several. Being asked what season it was when his first steam-heated incubator was run, Snow states that it was either in 1929 or in 1930, the last part of the year. Says that three of those steam-heated incubators are located at Sleepy Eye and another one is located at Montevideo, Minnesota, and that they each have a capacity of about 45,000 eggs. Being then asked how many electrical machines he had built (means electrically heated incubators), Snow answered that he would have to count them up, but something like a dozen. Says one is located at New Ulm, Minnesota, another at Tracy, two at Canby, two at Worthington, one at Faribault, two at St. Cloud, one at Benson, one at Litchfield, and one at Sauk Center, all in Minnesota.

215 These electrical machines ordinarily hold each 45,000 eggs, but, with extra trays put in, can be made to hold about 48,000.

Being asked whether the various hatcheries that he had designated were operated by him. Snow answered "Not altogether". Says that he had certain connections with them. Says there were some of the hatcheries run in his name, but were not his own hatcheries, but that he was interested in more or less of them, because of the way in which he sold the incubators. Being asked how many thereof he owned and operated in Minnesota, South Dakota and other places of the United States, Snow said he would have to count them up. He then said that he had twelve main plants and was interested in five more, as he sold his incubators under conditional contracts, under which the incubators belonged to him until they were fully paid for by the purchasers thereof. Says he holds mortgages on the incubators sold until paid for. Says he don't own twelve plants himself. Says he owns the two at New Ulm and one at Faribault, which are run under the names "Snow's Hatcheries". Says there are three incubators at Sleepy Eye. Says he owns the hatchery at Mankato, but uses there the Smith incubators. Says he owns another plant at Tracy, where he has two incubators, and another at Marshall, where he has an electrically heated incubator. At Montevideo, there is one of his steam-heated incubators and two Smith incubators, and then he has a hatchery at Canby, where he has one of his electrically heated incubators. Then, at Worthington, Minnesota, he has one of his electrically heated incubators and two of his team-heated incubators. Says there are two Smith incubators at Brookings, South Dakota.

216 Says he has a hatchery at Marshall, Minnesota, where he employs three Smith incubators. Says the hatchery at Faribault, belongs to his daughter. Says the one at St. Cloud belongs to himself, and that he has there two electrically heated incubators and one Smith. In respect to Sauk Center, he does not run that hatchery, but is selling an incubator there. States that he has now named all of the hatcheries owned or operated by him, or wherein he has any interest, to the best of his knowledge. Says he don't want to keep anything out.

Then his further testimony, under cross-examination, pages 261 to 267, inclusive, of typewritten trial record, is as follows:—

"Q. Now, I am asking you, Mr. Snow, did you ever build machines at Sleepy Eye where you put the fans at the top of the corridor?

A. I built a test machine at Sleepy Eye.

Q. With the same size cabinet as the Smith machine?

A. No, not exactly. Could—can I answer this to the best of my ability. I built a machine at Sleepy Eye with fans in it for the purpose of testing out to my satisfaction
217 whether it was necessary to lower down the eggs in this said Smith incubator and I put the fans overhead to make that test.

Q. And you built two machines like that, didn't you?

A. I built two machines and tore them down—tore down the machines.

Q. With the fans over the center of the corridors, that is right, isn't it?

A. I didn't build two—I built the machines and tore them down as far as that was concerned.

Q. But you built them?

A. I wouldn't say I built two.

Q. You did build them, did you not?

A. I wouldn't say I built two.

Q. You operated those machines at Sleepy Eye under lock and key in a cellar, did you not? A. I did not.

Q. You didn't?

A. I didn't run them under no lock and key.

Q. You run them down in the cellar?

A. I run this one incubator to prove to my satisfaction, to prove how eggs hatched when they were lowered.

Q. You didn't show us that machine when we were at Sleepy Eye. Why?

A. You didn't ask to see it.

Q. We asked you if you had any other machines. Do you remember that?

A. Those machines were dismantled. Those machines
218 or machine rather, was put up, and used in all different phases and tore down and reassembled in all different phases; was what you would call my test incubator, and I put fans blowing air up, as I said before here on the stand; I put fans and blew the air down, as I said here before on the stand; and I blew air sideways and what not.

Q. And you ran those incubators commercially in the cellar of your plant, did you not?

A. I used it for a test.

Q. You used it commercially, did you not?

A. I used it for a test on hatching eggs. It turned out to be a flop and failure.

Q. How long did you use it?
A. I don't remember.

Mr. Williamson: The witness is instructed, Your Honor, if he has any records with him in regard to any of these things he can refer to them before he answers these questions.

The Court: Oh yes.

Q. Now, those air inlets in your machines are adjustable, are they not? A. The what?
Q. The air inlets and outlets in your machines are adjusable, are they not? A. Yes, sir.
Q. And to what diameter of air inlet?
219 A. It is around inch and three-quarters to two inches, right in there, around two inches.
Q. And that is covered by a trough in which you have some gates so that you can adjust the amount of air that comes in? A. Yes.
Q. And the air outlets in the top of the machine, how big are those?
A. They are around seven inches, somewhere along there.
Q. And you have got a slide that goes over it?
A. Yes.
Q. And you can open it the whole way so that the whole opening can be exposed?
A. Yes.
Q. As I understand it, in the Smith machine, according to your experience, that the air must have sufficient velocity to get down to the eggs at the bottom of the corridor, is that right? A. Yes.
Q. And if air of sufficient velocity is provided to get down to the eggs in the lower part of the corridor they will hatch properly, is that right?
A. Oh, not necessarily.
Q. Now, I understand then in your machine you have an even temperature, you say, throughout, is that right?

Mr. Williamson: I can't hear your question here myself.

220 Mr. Ely: I beg your pardon.

Q. You have an even temperature throughout your machine, you say?
A. We try to maintain an even temperature.
Q. What is that temperature?
A. We try to maintain a temperature of approximately 99-¼.

Q. And you circulate the air about the machine so that you will get no hot or cold spots?

A. We agitate the air throughout the entire incubator.

Q. So that you will get no hot or cold spots?

A. We aim to have no hot or cold spots.

Q. And the air is then diffused throughout the machine so it has the same temperature, that is right, isn't it?

A. It is diffused to a certain extent.

Q. Well, it is diffused sufficiently so as to have the same temperature throughout the machine, is it not?

A. It has—diffuse the air to maintain an even temperature throughout the entire incubator.

Q. And that air passes over hot and cold eggs, doesn't it?

A. That air passes over all of the eggs most likely but—well, I would say it passes over and under.

Q. All of the eggs?

A. Over and under, yes.

Q. All of the eggs in the incubator? A. Yes.

Q. And it goes in a horizontal path?

221 A. More of a horizontal path than otherwise.

Q. And it goes on horizontal paths, out along the ceiling and side walls?

A. There is a greater circulation around the ceiling and on the walls, which I aim to get; was one of the main factors in that incubator.

Q. That goes in a horizontal path?

A. The air on the side of the incubator moves which way the wall is, because the wall would reflect—it couldn't go right through the wall and would naturally have to go around the wall, which I aim to get, is one of the main features of my incubator.

Q. That follows the wall as it leaves the fan, follows the wall and the ceiling?

A. To a certain extent.

Q. It does, does it not?

A. Not all of the air, just a certain percentage of the air.

Q. It goes in a horizontal path through the egg trays?

A. We aim to have a good portion of it move horizontally. That is the feature of that incubator.

Q. And when it is moving horizontally it moves in the same direction all of the time, does it not?

A. No, it don't.

Q. At any one point?

Mr. Williamson: Did you get his answer?

222 Mr. Ely: He said no.

(The answer read by the reporter, "No, it don't.")

Q. At any one point it moves in the same direction all of the time, doesn't it?

A. I wouldn't say it moves at the one point the same all of the time. It is agitated so that it goes all in which directions, but is agitated more on a horizontal plane than any other.

Q. You know that the air, as it goes through the hatching trays in front of the fans, moves in a horizontal direction continuously, in the same direction towards the fan. Now, you know that, don't you?

A. It may move—it may move in a horizontal plane—horizontal plane to the eye of the agitator. It may do that.

Q. And it does that today, and it will do that tomorrow, and it will do it every time you go in the machine, will it not? A. Yes, I suppose so.

Q. It will, won't it? A. Yes.

Mr. Ely: That is all, Your Honor.

223 E. H. Snow's Testimony, Under Redirect Examination.

His redirect examination begun on page 267 and continued through to near the end of page 277 and the continued part of it was as follows:

Redirect Examination.

By Mr. Williamson:

Q. Just a minute. Mr. Snow, have you got here with you your records as to the time when you built these va-
224 rious machines and the places where you sold them and put them into use? Have you got the records here with you?

A. I don't think so.

Q. Before taking the stand had you refreshed your memory at all by reference to records with respect to these dates—

A. No.

Q. —Mr. Ely was asking you about?

A. No.

Q. Are there any of those records here in the city where you could get at them?

A. No.

Q. How long ago was it that you made that experimental model of the Smith machine that Mr. Ely asked you about?

A. That was along in the year of about—in the years along in—along the year of 1926.

Q. Over six years ago?

(Preceding question is read by the reporter.)

A. It was along in the year of 1926.

Q. Have you got any record with you by which you can fix that?

A. No.

Q. Have you a record which you can get accessible before the close of this case?

A. Well, I wouldn't have any records of it any more than what we know.

Q. Well, have you any way, or do you have any fixing
225 the date, exactly fixing the date, otherwise than by memory? You have fixed it by memory now, haven't you, your best recollection?

A. Yes.

Q. Have you got any records?

A. I would have to investigate.

Q. I will ask you to investigate and we will call you at some future time to fix that date better.

(Witness excused.)

Mr. Williamson: Now, Your Honor, we would like to have you see our machines. They are right here in the ground floor of the Flour Exchange, and if we could take an early adjournment I think we might show you these machines, if you are willing to meet us down there, and it would be very helpful to you when you listen to Dr. Rowley's testimony to see those machines first.

The Court: We can go right down now.

Mr. Williamson: We would like to have Professor Rowley make a few tests there while you are present so as to make clear how these tests are conducted. Of course, we are not going to attempt to hold you there to cause the elaborate tests to be made that were made, but let him make a few tests just to show you what tests he did make, just to see how the tests were conducted. Of course, I can put him on the stand and go on with certain matters before we go down, or go down now or at any hour you are willing to go.

Mr. Ely: I object to the demonstration. I object to
226 any showing of that electrical machine down there, the Snow machine, for two reasons; in the first place, the fans are not the same as the fans at Sleepy Eye. You will recall Mr. Snow testified very carefully he brought everything from Sleepy Eye down with him except the fans and the fans are four inches less in diameter and therefore 15 per cent less in effective area than the other fans which

he used, and Mr. Snow said himself he had never used that machine that is down there.

Mr. Williamson: For hatching eggs. He said he used it for demonstrating purposes.

Mr. Ely: That is all right. He can demonstrate it all he wants to. Furthermore those fans are run, not only at different speeds from the speed of the fans at Sleepy Eye, but one is run at 225 and the other is run at 185 revolutions per minute, which greatly upsets the current regulation, so you won't get any definite idea of what Mr. Snow has done with that machine. And I object to any tests or any statements of Mr. Snow in reference to that machine.

Mr. Williamson: That is a radical misstatement. Mr. Snow has testified this machine down here is identical in structure with four other machines he put into commercial use and he testified he used this identical machine for demonstrations in making sales to customers and it is perfectly obvious—and this machine was made, he has testified it was made within the jurisdiction of this Court, and that
227 machine, having been made in the jurisdiction of this Court, we have a right to put it in as a machine made by us and make tests with it, whether there was any difference between that machine or other machines or not. We are not tied up by that machine that was in the basement of the Sleepy Eye plant.

Mr. Ely: I think you are:

Mr. Williamson: No, not anything of the kind. You went up there at your own request, out of courtesy from me, to see that machine. We have been willing to stipulate our machines all along the line. If you had asked me to stipulate that Sleepy Eye machine, I would have stipulated that, but that had to stay there because we couldn't take it out. If you had asked me to stipulate the machine down here, we could have stipulated that and saved a lot of time.

The Court: I think I will go and see the machine and have the tests. What that will play in the suit, of course I don't know.

Mr. Ely: Of course, I want to caution Your Honor that the fans are not the same.

The Court: He claims they are. What part that plays in this case will depend upon.

Mr. Williamson. When do you want to go?

The Court: It is now 12 o'clock. How long will it take?

Mr. Williamson: Oh, it will take about half an hour.

228 The Court: Then we will go down now.

(The Court and counsel and Mr. Taggart and Mr. Rowley and Mr. Snow together with the reporter then proceeded to 323 Third Street South, where the Court inspected two incubators, having certain tests made in the Snow incubator by Professor Rowley.)

(Adjournment taken until 2 o'clock P. M. November 18, 1932.)

---

229 November 18, 1932,

At 2 o'clock p. m.

Hearing resumed pursuant to adjournment.

Court and counsel present.

Mr. Williamson: I will recall the witness, Mr. E. H. Snow.

EARL H. SNOW, recalled, testified as follows:

Direct Examination.

By Mr. Williamson:

Q. Mr. Snow, since you were last on the stand, did His Honor, Judge Molyneaux, go with you and counsel for the parties down to the place where you have your specimen of the Smith machine, and the specimen of your own machine, on the ground floor of the Flour Exchange, to see these machines?

A. Yes, sir.

Q. When you were before on the stand, I forgot to ask you one question, and I don't think you spoke about it anywhere in your testimony. In the handling of the eggs in the Smith incubator, and in your own incubator, do you turn those eggs every day?

A. Yes, we aim to turn them two or three times a day.

Q. How do you effect that turning of these eggs?

A. You turn the entire tray.

Q. Well, how far do you turn it?

A. Well, they recommend, on their machine, to turn
230 it close to forty-five degrees or about forty-five degrees.

Q. That is on the Smith machine?

A. Yes, sir. And on my machine it is not necessary, and I don't recommend turning them that far.

Q. How far do you turn them?

A. Well, around,—in the neighborhood of thirty degrees, somewhere in there.

Q. What effect does that have on the eggs; what does it do for the eggs,—that is, by turning the eggs?

A. It turns the eggs as much as,—the elements inside of the egg shell,—to keep the elements, in other words, from growing tight to the embryo, or to the particles of the shell inside.

Q. The embryo inside shifts, does it?

A. Yes, sir.

Q. Have you had any experience in observing how the hen handles her own eggs?

A. Yes, sir.

Q. Have you made any study of them?

A. Yes, sir.

Q. Does she, as a matter of fact, according to your observation, turn the eggs?

A. Yes, sir.

Q. How does she do that?

A. She turns the eggs with her bill.

Q. How often?

231 A. She turns them, to the best of our knowledge, and to my best knowledge of everything else concerned, two and three times a day.

Q. In your experience with incubating machines, both of these makes and other makes, has there been an attempt on the part of manufacturers of incubators, users of incubators, to imitate the practice of the hen as nearly as is practicable?

A. Yes, sir.

Q. What is your observation of the way a hen handles her own eggs; does she leave those eggs during the day?

A. She leaves them, as a rule, to get something to eat.

Q. And while she is away, do these eggs naturally cool off to some extent? A. Yes, they cool off to some extent.

Q. In the incubator business, has there been an attempt made to imitate her in that respect?

A. Well, it was for a long time, but it has been the practice by all incubator companies of late, that it was not necessary to cool the eggs.

Q. So you don't do that any more?

A. No; so we don't do that any more.

Q. That was done in the earlier used machines, was it?

A. It was done in the earlier used machines, yes.

Q. Have you, since you were last on the stand, been able, by reference to some documents, to reliably fix the date

when you bought your first machine from the Smith
232 Incubator Company? A. Yes, sir.

Q. And what date did you find that to have been?

A. That was November 7, 1924.

Q. And when you were on the stand before, you spoke of having made an experimental small sized specimen, somewhat similar to the Smith machine, did you not?

A. Yes, sir.

Q. You were then just speaking from memory, were you not, without any reference to any records? A. Yes, sir.

Q. Have you tried to refresh your memory as to the events now, so as to be able to more reliably fix that date?

A. Yes, sir.

Q. And what do you find the date to have been, and how do you fix it?

A. The date that I built that test machine, that we were talking about, was built a year before I bought my first Smith incubator, and was tested to hatch eggs in, and then was dismantled.

Q. What, if any, had been the relations of your wife, Mrs. Snow, to the conduct of your incubator business, with respect to the handling of the incubators for hatching eggs?

Mr. Ely: Oh, I object to that as immaterial, if Your Honor please.

The Court: I don't see anything there,—

233 Mr. Williamson: (Interrupting) I want to corroborate this date by his wife.

The Court: How is that?

Mr. Williamson: She was intimately related to the handling of these eggs and was in contact with the incubators during that whole period of time, and she can corroborate him on this date of that experimental device; that is all.

The Court: All right. Go ahead.

Mr. Ely: Exception.

A. She knows when I built it.

Q. What were her relations to your business, and in what way does she know your business?

A. She knows my business for the reason that she is with me in practically all of my workings of the hatchery business and so on and so forth.

Q. Does she actually take a part in the hatchery,—of the hatches? A. Yes.

Q. During this whole period of time?
A. Throughout the entire period, since we have been married.

Mr. Williamson: That is all.

234 E. H. Snow's Testimony, under recross examination.

This begun on page 277 and continued to the top portion of page 286, and thereafter his redirect examination occupied pages 286 and 287 of the typewritten trial record, and the said testimony given under recross examination and under redirect examination appears on said pages 277 to 287 of the typewritten trial record, and is here reproduced in full, to-wit:—

Cross-Examination.

By Mr. Ely:
Q. How many of those experimental machines did you build before you bought your first Smith machine?
A. One.
235 Q. Only one? A. One.
Q. Is that the machine referred to in your letter of October, 1924, that you identified while you were on the stand before? A. No.
Q. Then you built more than one? A. I can explain that.
Q. (interrupting) No. Then you built more than one?
A. I built a different kind of incubator.
Q. I asked you whether you built more than one, and you said you only built one machine, before you bought the Smith machine?
A. I built one incubator, a cabinet incubator, one test cabinet incubator, before I bought my Smith,—one test cabinet incubator.
Q. Well, I cannot seem to get a straight answer. Now, Mr. Snow, did you build any other machines after you bought your first Smith incubator, up to the time that you built this one that we saw?
A. Yes; I experimented with lots and lots of them.
Q. And you built three machines with the fans in the top of the machine, did you not? A. Not necessarily, no.
Q. Did you build three machines?

The Court: Counsel did not ask you whether you
236 built it necessarily; you can answer that direct.

A. No.

By Mr. Ely:
Q. You know that you built three machines with a fan in the top of the corridor?

A. Now, if I can answer that right: I built to try out,—I did not try them out,—I built and tore them down.

Q. How many? A. I don't just know the number.

Q. Now, just a minute. Did you not build three machines, three incubators with the fans in the top of the corridor, and operate them commercially in the cellar of your hatchery at Sleepy Eye, between the years 1925 and 1929?

A. Not to the best of my knowledge.

Q. Now, wait a minute. That is a perfectly fair question and I think you can answer it.

A. I don't remember, no; not to the best of my knowledge.

Q. You deny that you did?

The Court: Well, I take it for granted that when he says that, that he denies that he did.

Mr. Williamson: That is right.

The Court: I could not place any other interpretation upon it.

By Mr. Ely:

Q. In your incubator at Sleepy Eye, you had two Smiths, did you not? A. In my incubator?

Q. I mean, in your hatchery at Sleepy Eye you had two Smiths?

237 A. Yes.

Q. And you operated those on the first floor?

A. Yes, sir.

Q. Did you, during the years from 1925 to 1929,—did you operate any incubators in the cellar?

A. I,—not to the best of my knowledge.

Q. You don't remember whether you did or not?

A. Not to the best of my knowledge.

Q. You don't remember whether you had any incubators in the cellar that were operated commercially during that time?

A. Not to the best of my knowledge, I would not.

Q. Now, in that cellar of yours, you come down a step and in the room to the right is where we saw the machine which is known as the Sleepy Eye machine, that is right, isn't it? A. Known as what?

Q. The one that we saw. A. Yes, to the right.

Q. And to the left there is another room?

A. Yes; that is a different building.

Q. But it connects through a door? A. Yes.

Q. Do you remember whether you had any incubators in commercial operation in the cellar, in the room at the left; do you remember that? A. At that time?

238 Q. Yes. A. No.

Q. From 1925 to 1929?

A. No; not to the best of my knowledge.

Q. At any time?

A. Not to the best of my knowledge.

Q. Do you remember whether you had produced chicks and sold them commercially in machines which you were operating in that portion of the cellar at the left, behind the door, and behind lock and key; do you remember that?

A. I used that as a test; that is what that was for, and that is what the incubator was built for.

Q. Now, there were three incubators, were there not?

A. There was one,—there was one built, one incubator for a test model.

Q. Then you did have an incubator in Sleepy Eye,—

A. (Interrupting) And that incubator that I built for a test model was dismantled. The incubator that I built after that one was of different construction and operated differently.

Q. For how long a period did you operate it as a test?

A. Operate it as a test?

Q. Yes.

A. I operated tests on these machines in different ways, ever since 1909.

Q. Well, let us not go back to 1909. I am asking you

239 about the period from 1925 to 1929.

Mr. Williamson: That was not in your question.

Mr. Ely: Well, that is what I am talking about; it was in my previous question.

By Mr. Ely:

Q. How long did you operate it?

A. I don't remember exactly how long I operated any test machine, because it was merely to bring out the method in which I could prove to myself was the best method of incubation.

Q. Did you sell the chicks off of this machine?

A. As far as,—I don't remember how many chicks came off of that machine, or whether I sold them or not.

Q. You made no record of them?

A. I have not made a record of them.

Q. You don't remember that you operated these machines in the basement, under lock and key, during the period that we have been discussing, from 1925 to 1929?

A. I don't remember of that at all.

Q. You went to Europe, didn't you, to a chick convention?

A. Yes, sir.

Q. When was that,—in London?

A. In 1930,—I don't remember.

Q. In 1929, wasn't it? A. 1929, was it?

Q. Was it '29,—it was 1930, wasn't it? A. Yes.

Q. Well, at any rate, you went to a convention,—
240 you went to a chick convention in 1930,—that is right, isn't it? A. Somewheres in there.

Q. Didn't you write a letter back to your secretary, to lock that part of the cellar, and not let anybody in?

Mr. Williamson: That is objected to as immaterial.

A. Oh, I don't know; I don't remember; I might have, because that was my experimental place; I might have.

Q. And you did send such a letter, didn't you?

A. I don't know; it might have been; I don't know.

Q. You don't remember?

A. I don't remember. Of course, it may have been possible, because that was my experimental incubator, where I tested out and worked, and tore down and rebuilt.

Q. And you did not sell any chicks from that?

A. I don't remember; I cannot recall with reference to the chicks, whether I sold the chicks out of that machine, or whether they were from other machines.

Q. And you don't remember whether you operated those commercially or not?

A. I made one of them,—because they were changed about so many different times,—I changed those machines every time I got a different idea. As I said before, it was my experimental incubator.

Q. What do you mean by the word "experimental"?

A. Experimental was where I was testing out to my
241 satisfaction, when I built it, like a man trying to make an invention; he cannot go to work and just say, "I can invent a typewriter, and make it." I had to try out an experiment, to satisfy myself, with the eggs, and find out how it would work, and which I did.

Q. If you operated this incubator for three or four years, and sold the product, and sold those chicks, you would still call that experimental?

A. This incubator was never run any length of time in the same manner.

Q. Will you please answer my question?
Q. What is the question?

(Previous question read by the reporter.)

A. I don't know; it would depend on how many times you change the incubator.
Q. I asked you a question; will you please answer the question; I want to know what you mean by experimental?
A. Experimental is where you build and rebuild an incubator, and test it out.
Q. Yes, but you had three incubators down there, didn't you?
A. I worked on different incubators down there at all times.
Q. Didn't you have three incubators at one time operating down there?
A. I don't think there was any of that kind operating at any one time,—not that I remember.
242 Q. Do you know a Miss Lena Laux? A. Yes, sir.
Q. Who is she?
A. She is a lady that was at Sleepy Eye.
Q. How long did she work for you?
A. I don't remember.
Q. Don't you recall how long she worked for you?
A. How?
Q. Don't you recall how long she worked for you?
A. She worked for me for a few years, off and on; she did not work all the while, steady.
Q. What was the greatest number of incubators that you had operating at one time, from 1925 to 1929, at Sleepy Eye?
A. What was that?

Mr. Williamson: That is objected to as immaterial. I cannot see the materiality of it.

The Court: The objection is overruled.

Mr. Williamson: Note an exception.

A. I did not get what you said.

(Previous question read by the reporter.)

A. To the best of my knowledge, in and about that time, we were running two incubators.
Q. That is the very best answer that you can give?
A. That is, to the best of my knowledge.
Q. That is the best answer you can give?
A. That is the best answer I can give you.
243 Q. And what were those two?
A. They were Smith incubators.

Q. They were the ones that were up on the first floor?
A. Yes, sir.

Mr. Ely: That is all.

Redirect Examination.

By Mr. Williamson:

Q. One more question or two: You stated when you were on the stand this forenoon, and, I think, yesterday, that you had made and sold a number of your electrically heated incubators, did you not? A. Yes, sir.

Q. Wait a minute,—and under cross-examination by Mr. Ely you specified the locations where those machines were being sold, did you not? A. Yes, sir.

Q. Now, I will ask you to state whether or not all those electrically heated incubators of yours that you identified,—

A. (interrupting) Yes, sir.

Q. (continuing) —that had been sold by you—

A. (interrupting) Yes, sir.

Q. (continuing) —were substantially like this machine, this electrically heated machine that you have got down here now on the main floor of the Flour Exchange?

A. Identically the same incubator.

Q. Were they the same in all respects?

244 A. The same in all respects.

Q. In structure? A. In structure.

Q. And in the mode of operation?

A. And in the mode of operation.

Q. How about the size of the fans?

A. Exactly the same size.

Q. How about the speed at which they run?

A. Exactly the same speed. There is no difference whatsoever in the incubators that I have running at the plant, that I mentioned here before,—only to improve them as electrical incubators are developed;—they are the same from A to Z as the incubator in the Flour Exchange.

Mr. Williamson: That is all.

Mr. Ely: That is all.

---

245 Nora Snow's Testimony.

Nora Snow, a witness called on behalf of the defendant, being first duly sworn, testified, on pages 288 and 289 of the typewritten trial record to the following effect, to-wit:

States that she is the wife of Mr. E. H. Snow and is forty-two years of age, and being asked to state what her relation

to her husband had been in the conduct of his incubator business, she stated that she had been with him as much as she possibly could when her family duties so allowed. Says that she actually helped him to run his business to a greater or less extent. Said she kept track of the business. Says that she kept the books.

States that she heard Mr. Snow testify about his experimental machine, which was more or less like the Smith machine, and that she remembers that event. Then being asked to fix the time when it occurred, she answered

"It was the year before we bought our first Smith machine."

Being asked how she was able to fix that date, she answers that it was a matter of memory with her and she is positive that it was before he bought his first Smith machine.

There was no cross-examination.

---

246 Professor Frank B. Rowley's Testimony.

Professor Frank B. Rowley, called as a mechanical expert witness on behalf of the defendant, having been first duly sworn, testified to the following effect, a portion of his testimony being here reproduced in narrative form, but most of it in full.

Under Direct Examination.

He states that he is fifty years of age and that he is a resident of Minneapolis, Minnesota, residing at 63 Barton Avenue. States that he is Professor of Mechanical Engineering, and Director of the Experimental Engineering Laboratories of the University of Minnesota. Has so acted since the spring of 1919, but has been with the said University since 1907. Was first an instructor in drawing and descriptive geometry. Was transferred to the Experimental Engineering Laboratories in 1916. Then, in 1917, his title was changed to Assistant Professor, and then, a year or two later, to Associate Professor, and then to Professor and Director of Laboratories.

Being asked what subjects he teaches at the University, he answered that his specific subjects are heating and ventilation and refrigeration, but that when he first went there, he taught drawing, descriptive geometry and designs, and has taught general engineering courses, including heat engines, and internal combustion engines, and has had complete charge of heating and ventilation and research work.

That he graduated from the University of Wisconsin,
247 Mechanical Engineering Department, in 1905, with the degree of Bachelor of Science, and then took one year's graduate work and received the Mechanical Engineer's degree in 1906. Then he was on private engineering work for one year, and then came to the University of Minnesota in 1907, and since then, in addition to his University duties, he has carried on a consulting practice in engineering. Has made many tests and investigations on heating and ventilating apparatus, contact driers, insulation driers, and practically all types of heating and ventilating apparatus, including oil burners, boilers, warm air furnaces, humidifiers, etc. He has made many investigations and tests for the Minnesota State Securities Commission. Has conducted a large amount of research work in relation to heat transmission and ventilation. He is a member of the Sigma XI and the Pi Tau Sigma Society. He is a member of many Engineering Societies, including the American Society of American Engineering, the American Society of Heating & Ventilating Engineers, the Society for the Promotion of Engineering Education, the Minnesota Federation of Architectural and Engineering Societies. He is, at the present time, the National President of the American Society of Heating & Ventilating Engineers, and was previously Vice President and Chairman of the Research Committee. He is also Chairman of the Technical Advisory Committee of that Society, and a member of the National Committee on Heating and Heating Transmission. He is also a member of the Department of Commerce Committee on Wood Utilization. He has delivered many lectures on heating and ventilation throughout the country and written many papers on that subject, published by the University Press.

He has had many cases in his work where it was neces-
248 sary for him to read and understand patents, with a view of determining the disclosures thereof and how the things disclosed would operate, and has acted as an expert witness and had experience in constructing machines and supervising the construction of machines, in accordance with the disclosure of patents relating to such machines.

Says he is himself a draftsman and has taught the subject.

States that he is not interested in any way in the result of this litigation and is not related by blood or marriage to the defendant or the defendant's wife.

His further testimony, under direct examination, runs from page 295 to the middle of page 489, of the typewritten trial record, which is here reproduced in full, and the record of his

cross-examination runs from the middle of page 489 to page 606 of the trial record and is here reproduced in full, and the record of his redirect examination runs from page 607 to the middle of page 616 of the typewritten trial record, which is also here reproduced in full.

249 Q. I show you here a copy of the Smith patent in suit, Number 1,262,860, of April 16, 1918, and ask you to state whether you have read and understand the disclosure of that patent? A. I have.

Q. Do you understand the disclosure of that patent?

A. I do.

Q. Please state, Professor, in your own way, what you understand the disclosure of that patent to be?

A. The disclosure in the plans and specifications,—in the drawings and specifications, is of an incubator, with double rows or trays, a corridor, with curtains on the sides, and with a fan for circulating the air downward through the corridor, underneath the curtains, where it will be drawn back through the egg trays, to the upper part of the machine, and out.

Now, in describing it in detail,—if we refer to Figure 1, which is a cross section, that probably illustrates it as well as any.

Q. Speak a little louder, Professor, if you will, please.

A. Referring to Figure 1, which is a cross section, the housing, or general casing is illustrated there, as a
250 room, an outside room,—the size is not given, but it is shown,—well I think numeral "6" indicates that; at any rate, that is it.

Now, there are two rows of trays; this is a vertical cross section. There are two tiers, I might say, of trays, one on each side.

In the central part, there is a corridor, and each side of the corridor are curtains, which extend from the top part down to the lower trays.

Now, in the upper part of the corridor, there is really a false ceiling, or a double ceiling there, you might call it, in which there is a fan supported. The fan blades are indicated by the figure "18," and that fan is for the purpose of driving the air downward through the column; from there it passes out under the curtain, and up through the trays, or the egg trays. Part of the eggs are shown in, and most of them are out of the trays.

Now, at the top, there are illustrated two openings by the numeral "28," which are for the purpose of letting out some

of the air which goes through, and there is another opening, a large one, at the central top of the figure, for the purpose of admitting air. That air is admitted and comes down through the valve opening, "24" there (indicating), where it is regulated to let the air into the chamber or corridor over the fan.

251 Now, if we refer to Figure 3, that is a longitudinal vertical section, or a section through the corridor lengthwise.

The fans that are shown in this case are two fans in the central part of the corridor; the curtain, or one part of the curtain, being removed, and the other curtain is in place, but turned back, and it shows the egg trays in a little different position than the other figure.

Now, in the detail there are three stationary trays at the top, and below that there are nine trays that are built or put in a frame that can be tilted or pivoted.

Below those nine trays there are three more shown here as stationary trays, near the bottom of the incubator, between the tiers of trays, there are some flexible strips shown.

Q. You had better give the reference numeral.

A. Well, these strips seem to be shown by numeral "28," and apparently there are two 28's used in this patent; I think that must be an error, but, at any rate, these strips are indicated by the numeral "28" between the lower trays, and those strips pass back through the length of the trays from this section to the back part of the tray, so that they cut off respectively that vertical passage between the tiers of trays.

Now, there is a pipe numeral "26," that is in the upper right hand corner of Figure 3. There is a pipe in there for the purpose of letting in a steam jet for humidity, it acts as a humidifier for the air.

252 There is a motor, of course, to operate the fan shown in Figure 1, and there are two fans, of course, in this particular specification.

Q. There are how many motors?

A. Two motors. At the left side of Figure 3, there is indicated a door for the entrance to the corridor,—a door for entering the central corridor. While those curtains are shown only part way in Figure 3, they are removed only to show the trays; they continue in the apparatus; they should continue clear across the section.

Q. How is it heated,—is there any means for heating?

A. Yes, there are heating pipes shown at the top. In Figure 1, there is shown a pipe number "23," on either side of the fan, along the corridor; and the same is shown in Figure 3, as running lengthwise along the corridor, above the fan support.

I think that describes the machine; that was your question.

Q. As far as the structure is concerned?
A. Yes, sir.
Q. Will you describe the operation of the machine as disclosed by that patent, to which you have been referring, especially with reference to the air circulation?
A. Well, the operation of the machine is as follows: First, omitting the method of filling the trays and lowering them,—I will describe the air circulation.

253 Now, the air is driven by fans in the column, down the central corridor,—between the curtains, to a point near the floor,where it mushrooms out underneath the curtain into the tray compartment. There it filters up through the trays to the space between the trays, up to the upper space above the trays, from where it is drawn in over the beams, or the elements "22," into the fan suction chamber, or into the chamber above the fan. It should be pointed out, above this line "22;" there is an opening there to allow this air to come back above the fan for recirculation.

Now, a part of the air will pass out through "28,"—these openings "28" (indicating), and a part of the new air will come in through the large central opening at the top of the casing. Now, that will depend upon the regulation of the valves controlling those openings.

Q. Are there any valves shown in the patent?
A. There is one, number "24," which I think is a question there,—if it is not meant for a valve,—which I have interpreted as a valve.
Q. Speak a little louder, please.
A. Now, the air of course, is heated by the pipe "23," as called for by the temperature, and circulates on through and continues in the column downward, and vertically up through the tray.

254 Now, referring to Figure 3, as to the method of operation, the eggs are set in the upper three trays. After a preliminary period, I believe, of three days, they are moved downward into the movable or tilting trays. And then, after a further period, they are moved downward still

farther, and so on, until at the end of the eighteenth day, they are taken from the different trays, into the stationary trays underneath, which are called the hatching trays, I believe, or the nursery trays.

The eggs in the tilting trays are tilted at different angles, that is, they are tilted first in one direction, and then in the other, or provision is made for tilting them, to change the position of the egg through the period of hatching.

Now, in the operation of this patent, it describes many places in the specification. The curtains and corridors are mentioned, showing that the direction of the air is downward through the corridor. I have jotted down some of these, to save a little time.

On page one, line 70: "Two parallel rows of curtains '3' and '4', to provide a central compartment or corridor '5', and side compartments '6' and '7.' Entrance to the corridor,"—and so forth.

Now, at page two, line 21: "behind the curtains '3' and '4', and these curtains extend a sufficient distance, as indicated in figure 1, to cause the heated air distributed by the fans to pass downwardly through the central corridor to a point near the bottom of the chamber," which indicates that the curtains were there for that purpose.

Further on, on page two, line 53: "In Figure 3 only a
255 single curtain '3' is shown in place, the curtain or curtains at the right being entirely removed to disclose the racks and trays in full lines."

Now, as to the column of air, the column of air or the direction of motion, of course, the curtains indicate and show very clearly the direction of motion, but quoting from the patent, at page two, line 78,—I think that is line 79, pardon me,—

Q. Line 79.

A. Yes, line 79: "It, therefore, appears that the approved apparatus and method contemplates the application of hot air circulating in a column with such speed as to keep the temperature,"—and so on. The column of air,—

Q. (interrupting) Read all of that.

A. "With such speed as to keep the temperature substantially uniform and so arranging the eggs that the fresh eggs are placed at one point in the column of air and held in a horizontal plane until they reach a pre-determined stage of incubation, and then put at a different point in the same column of air and kept in planes inclined to the horizontal

and thereafter placed at such a point in the column of air that the forced draft of air acts to hold the eggs at a uniform temperature, and to prevent them from becoming over heated, and thereafter placing the eggs into final position for the hatching operation."

256 A. (Continued) Now, on page 1, line 28, it states again that the same column of air. Now as to the intent or description, disclosure, for the moving of eggs downward, or the progress through the incubator, on page 1, line 20—where it starts on line 19, "This improved system contemplates that the fresh eggs will be placed in a horizontal plane preferably by means of the trays supported in horizontal planes and after the eggs have been subjected to the circulation of hot air for a predetermined time, the air circulating largely around the eggs, they will be placed in a tilted or inclined position in a different location, but still subject to the same column of air." I might read a little further there: "And at this period of incubation they will be tilted in different planes at regular intervals during the time they remain in the latter position, and after they remain for a predetermined time they will be again moved to a different position with reference to the forced circulation of hot air and so placed therein that the air will tend to keep the eggs below 105 degrees temperature and in this last named position the air will be forced to pass between the different eggs and will, in effect, act as a cooling medium for the eggs." Now that is describing the last position of those eggs as they move downward and of course the effect of the strips which I have referred to would force the air through the eggs, up through those eggs in the advanced stages. Now it was evident that the air is to circulate around the eggs, line

257 25, "The air circulating largely around the eggs." Line 25, page 1. Line 28, page 2. Quoting from there: "As explained later the trays near the bottom are preferably arranged so that the air is forced to pass between the eggs in each tray thereby cooling or holding the temperature of those eggs down," indicating that those eggs in the lower trays are the high temperature eggs and it is the intention to pass the air through those, around the eggs themselves, not through the columns, but around the eggs, to keep it down—to keep the temperature down.

I think I referred to those flexible strips on line 59, page 2. If I didn't they are referred to again there for that same purpose.

Now I haven't said anything about, in this operation, the humidity, but it is understood that humidity comes in through

the steam feed. Humidity is provided through the steam feed which is controlled by hand in this case. It states that any suitable thermostatic means may be employed for regulating the temperature, which of course is expected. I think that describes the operation of it.

Q. I call your attention to the paragraph beginning with line 53, on page 2 of the specifications, and ask you to make clear to the Court what is being referred to there in that paragraph.

A. That paragraph in Figure 3, only a single curtain 3, is shown in place. That refers to Figure 3 over here which says only part of the curtains were in place and really that
258 figure has part or the right hand side of the curtains removed in order to show the trays in open, full view. That refers specifically to that cut.

Q. Does it state the purpose of the parts to which you previously called attention, and which are marked with the numeral 28?

A. Yes, it states further there, "and it will be also noted that the vertical spaces 27 between the adjacent tilting racks 10 are closed at their lower ends by flexible strips of fabric which are attached to and extend upward at each side of each rack so as to compel the air to circulate through the mesh bottom and around and about each egg as heretofore referred to and as the eggs further advanced in incubation"—I don't think that is pertinent to this point.

Q. Well, you want this copy?

A. Well, I can read the rest of it. I don't think it is pertinent to it. I will read the rest of it: "And as the eggs further advanced in incubation are contained in these lower trays and as the danger is that the temperature will rise in these eggs to a point injurious to incubation the improved method disclosed herein permits the circulating air to act as a medium to prevent the over heating at this stage of incubation and this is accomplished by promoting an induced draft within the lower trays." Of course the purpose of those strips there, which are there, and the whole function as described here, those strips are there to compel the
259 air to pass in and about the eggs in those lower trays and the method described of incubation or of hatching, rather, whereby the eggs in the advanced stage of incubation are at the bottom of the tiers, means that the hot eggs are down there and those strips are put in there to force the air up through to cool those eggs from the bottom up.

Q. What then do you understand to be the method of hatching eggs disclosed in the Smith patent in suit and pointed out in claims 1 and 2 of the patent?

Mr. Ely: Oh, I beg your pardon. I object to that, Your Honor. I don't think a lawyer may ask his expert to interpret the claims. I think that is the duty of the Court.

Mr. Williamson: I will change it so as to leave "pointing the claims" out of it.

Q. What do you understand the method of hatching eggs to be disclosed in this patent, the Smith patent here in suit?

A. The method, as the method of operation, is to put the eggs in an incubator, to put—to put them in at different periods progressing downward. That is, the eggs are to be partly set at one time and part at the other, continuously, and they are to be moved downward in the incubator and the current or column of air is to move downward in a free space, then up through the column of the incubating eggs and eggs are moved progressively downward. The air comes up through the lower eggs for the purpose of cooling
260 them with circulation. Now, that is the method, I suppose. That is what I have been—The other things in here, of course the method is to prevent—to furnish a certain amount of fresh air and conserve the moisture and to create a current of air in there that is of sufficient velocity to drive that air around through the incubator. I may not have understood the question but that is what I interpret the meaning of method of operation.

Q. State whether or not in your judgment the curtains, marked with numerals 3 and 4, as shown in figures—as shown best in figure 1 of the drawings of the patent are essential elements to carry into effect the method of hatching eggs disclosed in that patent.

A. They are.

Q. State why.

A. If those curtains weren't in there, those fans would circulate the air downward. The current of air will naturally take the path of least resistance and those currents of air or that column of air from the fan would separate and pass through the upper trays and not pass down to the bottom. In other words, if those curtains were removed instead of having a column of air passing down the corridor to the bottom, that air is going to fan out and creep into the trays up in the upper trays all along the corridor. There would be no defined channel for the column.

The Court: Wouldn't those fans throw the air clear to the bottom?

261 The Witness: Part of the air might go to the bottom, but a lot of it would branch off to the side. Now air, when it is blown out into an open space is not going to follow a column or a stream, only for a very short time, and especially a fan of that type, it couldn't—if you were going to project that air current to the bottom, it would then have to be at an extremely high velocity, that is compared to what we were thinking of on the fan, otherwise it would turn out and into the trays.

Q. How about the question of the power of the fan and the speed of the fan for affecting this circulation?

A. If you are going to have sufficient pressure of the fan to cause that circulation—I understand your question without the curtains?

Q. No, with the curtains.

A. Oh, with the curtains?

Q. Certainly, with or without the curtains. How important is the question of speed of fans to force this air down through the columns and the velocity at which the air moves?

A. It is a question of moving the column of air downward. Now, if you move that air column downward with a large number of fans so the whole column is going downward, then you could have a slow velocity with confined curtains and that volume of air would move to the bottom. Now, if you attempt to move that air down without the curtains in columns, then in order to move it down you have got to have a high velocity current in order to get to
262 the bottom.

Q. The current would turn off to the sides, wouldn't it?

A. It would turn off to the sides.

Q. Instead of all going to the bottom?

A. Yes, unless you inject a high velocity current in there, entirely different than these currents are.

Q. Have you seen and inspected and tested any specimens of this Smith machine disclosed here in this patent?

A. I have.

Q. Where and when and in whose possession?

A. The machine, I suppose it was in Mr. Snow's possession, down at 323 South Third Street.

Q. In the Flour Exchange?

A. Flour Exchange Building.

Q. First floor?

A. First floor of the Flour Exchange.

Q. Please state whether or not you saw that machine actually operated at that place?

A. Yes, operated without eggs, of course.

Q. What is that?

A. Operated without eggs in it.

Q. Yes, without eggs in it. For what purpose was it operated at the time you saw it?

A. Operated to show the circulation of the air in the machine.

Q. And was that done in the presence of counsel for
263 the plaintiff in this case?

A. It was.

Q. And did you make a series of tests with it at that time?

A. I did.

Q. State whether or not that machine, as you saw it there at the time you have referred to, was exactly like the machine disclosed in the Smith patent in respect to structure, and if there is any material differences in it, make them clear to the Court.

A. Now the differences in the machine—

Q. The commercial machine.

A. Naturally this isn't the same scale drawing as that structure, but the differences are in the—one of the differences named are in the trays, the method of supporting the trays. Now, in that machine that is referred to at Third Street, the twelve upper trays are all supported on chains so that they can be tilted all together, and so that they progress downward. That is, the trays are placed in at the top, and taken out at the bottom. There are no strips. There are no fabric strips between the ends of the trays. They are open. The curtains which are on the machine down there are somewhat shorter than these. They don't come quite down to the hatching trays. The machine has four fans in the corridor instead of two. It was longer—yes, twelve tiers of trays, whereas this one has only five tiers. The principle, however, of circulation, of passing the air down the column and
264 corridor between the curtains—

Q. Let me ask you another question first. How about those flexible connections between the tiers and the trays at the lower end marked in the drawing of the patent with the numeral 28?

A. They are not there. I thought I had stated that.

Q. No, you had not. They are not present in the commercial machine?

A. No, they are not present in the commercial machine.

Q. Does that make a difference where the air circulates with respect to the lower trays?

A. Yes, with respect to the lower trays, air is naturally going to take the path of the least resistance and is not going to the place of most resistance.

Q. And if so, in the commercial machine, the air can go up the tiers or trays, can it?

A. Yes, in the commercial machine with which I am familiar, yes.

Q. Yes, that is what I mean, down here.

A. Yes.

Q. Go ahead.

A. The operation of the circulation of air down there, it comes down in the column between the two curtains shown. It comes down to the bottom and there it goes under the trays and also in that case it goes between the hatching trays and the lower tray of the tilting trays, because the curtains aren't as long as these are, that space isn't covered, so the air turns in and from that place it passes on up. Now, of course, the reason it turns in there, and as shown by our test, is because the curtains are shorter and that would happen all the way up as long as those curtains are shortened up and always turns around under those curtains. That is the function of those curtains.

Q. Just state to the Court what tests you made with that Snow specimen of the Smith machine located at the place you have named here in Minneapolis and give the results of the same?

A. The tests made on the Smith incubator or the machine referred to consisted of tests by the smoke method to determine the circulation or flow of air, and also from anemometer tests which I will explain. Now by the smoke method I mean a cloud of smoke was created in the current of air or in the air, wherever we want to test it, by mixing together the fumes of hydrochloric acid and ammonia, ammonia water, and that gives a white fume of ammonia chloride which is easily visible and travels with the air, a smoke fume or smoke cloud you might call it. Now in that machine, the machine was running, that is the fans were operating and the door was, of course, closed. Curtains were down as far as they are on the machine and smoke readings were taken to show the direction of the flow of the air down under the curtains. Now that direction of flow was taken to show whether it was in or out; no attempt to show the degree of in or out. It was in or out, to show whether there was

any other flow. The record of tests here—I don't know whether you care to see these, Your Honor?

The Court: Have you got two?

The Witness: Well, I haven't got two.

Mr. Williamson: We will hand Your Honor one. Here are duplicates. Those are the Smith tests you have there.

A. This is the Smith machine and you have down in the lower right hand corner it is marked, "Test diagram 5, Smith incubator" on the two of these sheets. You have in the upper right hand corner there, is marked the date and time and sheet number 1 was the first test, sheet number 1. Now, on that sheet number 1—

The Court: Yes, I have it.

Mr. Williamson: You can step right up there and explain to the Court.

The Court: I have it.

The Witness: Now, on that are recorded the data that were taken from the tests on the left side of the corridor facing the door. That is I mean from the front of the machine if you stood in the door.

The Court: That is on your left.

The Witness: That is on your left, and these are the test data. The places out on the center lines below are
267 marked "i". I might say in these tests I means air direction in. Now "in" represents flowing into the space under the egg trays, or away from—

The Court: Going from the corridor into the tiers.

The Witness: That is right. Now those points where the i's are marked is right below the curtains, are the points where the smoke tests were taken. They were taken just below the curtain, in the place below the tilting trays, above the hatching trays. Then they were taken in the space below the hatching trays. There you will notice that they are marked "i" and also some figures are given there for the anemometer readings and those particular places at the bottom, we placed an anemometer facing the corridor, and those numbers there are the recorded readings of that anemometer in feet per minute as recorded by the anemometer. The door, of course, is to the left of this. Under the fans are some—for instance, under the fans there are some numbers there at the left, 805 fm, that is 805 feet per minute

The second fan is 1032 and so on, as the feet per minute of the air velocities recorded by the anemometers in a space about one foot under the center of the fan. We didn't attempt to traverse the area at all. We just put in anemometers in one place and took the speed at that place. The figures under the third and fourth fan to the right, under the third one, 1662, and the fourth one, 1725, represent the speed of those fans, by a speed counter, revolutions per
268 minute. That was taken—those were taken with a speed counter and stop watch.

Q. Better state what those are so it will go on the record.

A. The third fan from the front shows revolutions per minute of 1662. The fourth fan shows 1725 revolutions per minute. Now on this—

Q. How about the other two?

A. We only took the third and fourth because there were screens over those, they were not loosened and we didn't want to pull them off, so we didn't take those two. Now at the center top, the word "center opening 10 inches" means that the diameter of the opening at the top of the machine for the inlet of air was ten inches and the velocity, V, is the velocity of 412 feet per minute as recorded by the anemometer of the air entering that opening. Now, in the right at the top there is marked "L. S.", that is left side, opening 6-¼ inches square, 298 feet per minute. Feet per minute isn't on here, but that represents the feet per minute as the air passing out of that opening. That is on the left side of the machine. Now below that, right side, 6-¼ inches square, is the opening and there are 278 feet per minute is the anemometer reading of the air passing out of that opening. In the same way on the left side of this drawing or at the front of the machine we have "left side, 6-¼ inches square, 268 feet per minute." That is the lineal velocity of the air passing out of the opening on the left side. The velocity
269 of the air passing out on the right side was 274 feet per minute. The anemometer, word "anemometer K. and E, 5E, 107," simply designates the number on the anemometer, identifies it. It is a Keuffel and Esser instrument. That is simply the name.

Now, referring to sheet number 2, that is the other sheet, Your Honor. That sheet was taken—that represents the data as taken on the opposite side of the corridor. The only data on this sheet, of course the fan speed was the same as on the other, are the letters showing the direction of flow, were taken by the smoke, and the figures in the bottom line showing the speed in feet per minute, as recorded by the

anemometer. Now, those all show the air flowing in under the curtain. That means away from the observer, from the corridor towards the trays. These original sheets I have here are the sheets of data exactly as I took them at the tests, when all were present, that is both counsel, Mr. Taggart and Mr. Show and the sheets bear my signature made at the time.

Q. The sheets, how many are there of them, the sheets that you have just referred to of the Smith machine?
A. Two.

Mr. Williamson: The two sheets identified by the witness and which have at their lower right hand corner, "Test diagram number 5, sheet number 1, and number 2" are offered in evidence on behalf of the defendant, to be marked as Defendant's Exhibit J-1 and J-2, and with the
270 words "Test Diagram of the Smith Machine."

The Court: Received.

(Defendant's Exhibits J-1 and J-2 are marked for identification by the reporter.)

Mr. Williamson: You have a set, Your Honor?

The Court: I have a set of the others. Are these some new ones?

Mr. Williamson: These are the ones he has just been testifying about.

The Court: I have a set of those.

Q. Go ahead, Professor, whenever you are ready.
A. Well, I finished my last question. I finished those tests and described those.
Q. You have finished, have you?
A. You see I was talking about the Smith, unless the operation, if you want that.
Q. I show you here a set of photographs, three in number which are in evidence and which were identified by Mr. Snow, and are in evidence marked Defendant's Exhibits G-1, G-2 and G-3. State whether you recognize them.
A. I do.
Q. State whether you compared them with the Smith machine which you tested down on the first floor of the Flour Exchange.
A. Well, this is the first time I have seen these photographs. I wasn't there when they were taken, but they are

exactly the same as that machine. They are the same machine.

271 Q. They are the same machine?

A. They represent the same machine, yes.

Q. I believe you said you had not yet described the operation of that machine which you there tested. Did you say that or have you described it?

A. I don't think I gave the description of the operation.

Q. Give a very brief description of it.

A. The operation, as far as the air circulation which we tested, is as follows: The air comes in through the four fans at the top of the corridor, passes down in a column to the floor, or to the space underneath the curtains; from there it passes laterally under the trays and about the lower trays and then goes up to the fan again. Now the exact current or the exact velocity behind those curtains I did not test. I know that it returns to the fan, but I do not know what the velocity is at different stages through there, of course.

Q. Would it be possible to test that reliably without removing the curtains?

A. No, not by any anemometer we have, unless it was by special means. It would have to be a special device. The ordinary anemometer we use couldn't be used there without removing the curtains.

Q. Why not?

A. No way of getting in to read it or to tell what is going on.

Q. State whether the operation of this Snow specimen

272 of the Smith machine, commercial machine now in the Flour Exchange, was materially different from the operation of the Smith machine disclosed in the patent as you have described it.

A. Now confining it to the operation, the machine, as tested, had curtains that were a little bit shorter than those shown in the specifications of the patent. Therefore the air turning around under those curtains actually passed across between the lower tilting trays and the hatching trays. Now there are structural differences, like the trays and so on, but substantially the circulation is the same as in the patent, with the exception of those curtains being a little shorter.

Q. And how about the cut offs at the bottom in the patent?

A. The cutoffs were omitted too. There was no cutoff. no canvas or flexible connections between the tiers of trays. They were open.

Q. So the air could circulate up between them?

A. The air could circulate directly up through the trays.

Mr. Williamson: I will just do this, if that Smith machine, that Snow specimen of the Smith machine now in the Flour Exchange has not already been offered in evidence and marked in evidence, I offer it now.

The Court: It will be received.

Mr. Williamson: It will be marked Exhibit K. But I think it is already in. On the understanding that Mr. Snow is to have the right to use it this hatching season, commercial season.

273 Mr. Ely: Well, that is the Smith machine.

Mr. Williamson: All right. It is in now.

Q. Did you inspect and test the Snow incubator located at the same place that you have said this Snow specimen of Smith incubator was located? A. I did.

Q. Did you ever see any scale drawings of that Snow incubator? A. I have.

Q. I show you a set of drawings here and ask you to state whether you recognize them or not, which purport to be made to a scale and consists of five sheets of drawings.

A. I recognize them.

Q. Have you compared those drawings with the actual machine? A. I have.

Q. Do they correctly represent that machine?

A. They do.

Mr. Williamson: The drawings identified by the witness, being five sheets, are offered in evidence on behalf of the defendant, to be marked Defendant's Exhibits L-1, L-2, L-3, L-4 and L-5.

The Court: Received.

Q. Now, Professor, give a brief description of that Snow incubator with reference to these drawings, and make it as brief as you can, consistent with clearness and if the description of the drawings themselves is sufficient to
274 indicate the parts, don't go to the trouble to specify any details but try to make it so clear to the Court that he can understand what is shown on those.

(Defendant's Exhibits L-1 to L-5 inclusive marked for identification by the reporter.)

Mr. Williamson: Where is his drawing board? Give him his drawing board.

The Witness: I don't need it. When describing these drawings, wherever it is clear I will refrain from putting in letters or anything on the drawings. If there is a question of doubt, I will letter them or number the points.

Now referring to Figure 1, that represents to scale a front elevation of the Snow incubator as installed and tested at the Flour Exchange Annex. There is a central door, and on either side there is a motor which will be shown by the later display. The fans on each side of the machine. In the upper right hand side there is a motor switch, marked "motor switch", which is a switch for operating the two motors shown at the or below that there is a thermostat case, which is shown covered up here, and which contains a contact switch which is operated by the thermostat in the incubator. The heater contactor box is the mechanism by which the current is thrown on and off, the heaters from the thermostat. Now below that heater contact box is a master switch or switch coming in from the outside. And up in the or just in the upper right hand corner of the door is a light switch or switch which controls the lights within the
275 incubator. Now the motors will show better in another view, but just above the motors we see the outline of the wheels or pulleys which operate the agitators inside, and just above the motors and pulleys there is an extension on each side which is the air inlet for the incubator, and that will be shown a little more in detail later.

Now referring to Figure 2, this is a right side elevation of the machine. By right side I mean when you are facing the machine from the door. The equipment described for controls is shown at the left in outline. At the central part the motor is shown and also the two pulleys which operate the agitators inside of the casing or housing and the belts which connect these pulleys with the motor. Now above each pulley there is a view of the air inlet box of housing, you might say, and invisibly back of that are shown by dotted lines the outlet openings through the wall of the incubator. That shows where the air gets in. It comes in at the end of those boxes, box-like arrangements, and passes into those holes. And on each end of each box there is an extension there which is a door or a movable cover which regulates the air that goes in. In other words, the air going in can be regulated to any amount as desired. The lines and so on across the front and down to the motor merely represents the electrical connections leading to the motor and to the lights in the back and the heating coils.

Now referring to figure 3, that is a vertical cross-
276 section of the machine through the corridor looking to the left. On the left side of this view the trays have been removed in order to show the tray supports, the openings for the inlet air and the agitator. The agitator or those paddle wheels I will designate by the number 11. I am taking starting with 11 because there are some other numbers here and I don't want to confuse it. On the right half of this view the trays and the tiers are shown in place with the tilting trays tilted to the left downward, and the hatching trays placed underneath. At the upper part of this section, above the tilting trays are some bar like arrangements there which are the heating elements. I will mark those 12. I don't know whether it is clear.

The Court: Yes, I see it.

The Witness: The heating elements and at each end of course an electric light, and at the left end electric light switch. At the top there are two openings shown which I will call 13, for designation, 13 and 13-A. Those openings are for the outlet of air from the machine. And below those openings there is a sliding damper or closure which I will call 14 and 14-A—that is this right in here, Your Honor—for the purpose of closing those off and regulating the amount of air which leaves the machine through these openings. The vertical supports for the trays are shown at the left part. I will mark those vertical supports 15. Those are the vertical
277 supports at the back of the trays for hanging the center of the tray. The chains which support the sides of the trays in front are shown at the right hand and I will designate those as 16. I might explain that the top of those chains are hooked onto a bar which allows them to tilt back and forth. It doesn't happen to be shown there, a bar across there and hanging which tilts. The door is at the left of this view at the left side. The space, of course, under the hatching trays, is apparent there. There are two hatching trays with a space underneath.

Now referring to Figure 4, Figure 4 is a vertical sectional view through the line of the rear agitators. It is marked on Figure 2 where the view is taken, but it is a view looking back, looking from the front towards the rear with the front half of the machine cut away clear back to those rear motor—pulleys and the agitating blades on the side of the case. Now, this view shows—

Q. Now this view, you mean some figure?

A. No, I meant the whole.

The Court: That is Figure 4?

The Witness: No, I meant Figure 4.

Q. All right.

A. Pardon me. I will say this drawing shows, both at the left and right, the rear pulleys for the agitators, shows the shaft coming through the housing in each case and shows the agitating blades which are placed outside of the trays near the housing. That is another view of the blades
278 of the agitators.

Q. What set is that now?

A. Now, wait a minute, I am talking still about the Figure 4.

Q. All right.

A. Those agitators are the same agitators, or it is another view of the rear agitator which is shown by 11 in Figure 3. That agitator is there cut away half so it isn't actually on this view, and I would letter those agitators 11, just the same as the other view, in order to indicate what we mean by them. Just above the pulleys on each side, there is an outline showing the inlet air box and there are some openings through underneath that which show the openings from the inlet airbox into the inner chamber. Now I will number that inlet air box 17, and the opening shown there as 18 in order to designate the air inlet. That is 17 and 18. At the top of the machine is an opening which is one of the air outlets, and I will designate that as 18, so if there is any further reference to it. The trays are shown in section, the trays are shown as cut down through the center of the trays, through the tiers there, and it shows the trays, the length of them and proportions and it shows the center aisle or corridor and on the rear of the center corridor are shown the numbers which are used in setting the different trays. Now in the top near the center are the heating elements, which we call 12. There are two of those, one on each side. These are the elements I refer to here, one on each side. And
279 below those heating elements are pans for water, humidity pans where water is put into the incubator. I will call those humidity pans 19. In the central part down at the base is a humidifier which is an atomizing humidifier for the purpose of supplying humidity to the machine. Now I believe the other supports and so on are apparent there. I will call that humidifier 20, in case it is necessary to refer to it.

Now, referring to drawing 5—

Q. Sheet or figure?

A. Figure 5, yes. Call it Figure 5, that is the way it is lettered here, Figure 5. This shows some of the details of the parts of the machine. For instance—well, I will have to change my first statement. I thought 5 referred to the whole sheet. It only refers to every one. Figure 5—

The Court: I see. Each one is numbered here. Figure 5. Various drawings.

The Witness: Yes, and figure 5 doesn't refer to the whole sheet as I thought it did. It refers to only the one. Figure 5 then is a section, lengthwise section, through the tray, one of the egg trays. Figure 6, an end view of one of the trays and shows the hangings and the chains. Figure 7 shows the rear support for the chains upon which the trays are hung, and shows how it may be tilted either way. Figure 8 shows a portion of the section just above the hatching trays, shows that screen in there. Figure 9 shows a guard
280 placed on the end of the egg trays while they are in the hatching trays in order to keep the chickens in. I think that is all.

Q. Now, Professor, you have testified you made a series of tests of that Snow incubator, have you not? A. Yes, sir.

Q. Did you receive from me any general instructions in respect to the conduct of these tests of that Snow incubator and applying also to the proposed tests of the Smith machine and any tests that you might make of any other machines in question.

A. The only instructions that I got from you was to make the tests in my own way and then be absolutely fair and show what the machine was doing.

Q. And have you done that? A. I have.

Q. And if there is any doubt who was to have the benefit of it, according to my instructions? A. The other side.

Mr. Ely: Well, I object to that.

Mr. Williamson: Well, he was instructed that way.

Q. What was the answer? A. The other side.

Q. What is the answer?

A. I say the other side—I don't know how to answer that.

Q. The plaintiff was to have the benefit of the doubt.
281 Now, first give a general description of what you understand the operation of the Snow incubator to be

and then subsequently verify that by reference to your tests. But I don't want to confuse the Court by having you first go into the details of the test. I would like to have you give him a general description of what you understand the operation of the Snow incubator to be, based on your study of it, and the tests which you made of it, and then I will ask you to follow with your details.

A. Well, in describing the operation of the Snow incubator I will separate it into parts. I will first describe the circulation of the air through the incubator.

Now in the Snow incubator—I have described the general structure of it—there are four motor driven agitators. That is, they are driven through a belt, one on each side—or two on each side of the incubator. And those are for the purpose of mixing up the air, agitating it, and stirring it up in the incubator. Now those agitators are wheels, paddle wheels, which at first sight you might think were designed exactly like a propeller fan. Now they are so placed and so rotated that if they were used as a fan in the true sense of a fan, they would throw the air outward from the face of it into the center of the corridor. In other words the pitch of those blades is so set and the blades are so rotated that the tendency, as far as the pitch is concerned, is to throw the air horizontally outward into the corridor.

282 Now as a matter of fact there can't be enough air supplied from the back of those blades and there is a centrifugal force throwing the air off from the ends of those blades and that centrifugal force is stronger than it is to pull it—than the force which propels it forward. Therefore the air is actually thrown in every direction off from the tips of those blades in a centrifugal—that is in a plane of rotation, and slightly forward at the ends of the blades. Now of course there is all kinds of action going on underneath that we can't explain in detail, back of those blades. The air which is thrown off at the end of the blades, in these various directions is not at the blade, is partly forward, because there is a double pressure that is a component force, one tangential and the other out into the incubator, you might say. Now of course the air must come from some place, and it comes into the center of those fans against the pitch of the blade. Now, I say into the center of the fans. They are not in a true sense fans. They are agitators, because they aren't working like a fan. If they were fans they would throw the air outward and they would be designed differently. If you had any intention of using them as a fan you wouldnt' expect to run

them backwards. They pull the air in through the center, through the eye of it. The air is thrown out then at the top, bottom, in every direction from the fan, from where it circulates, partly around the outside housing, and partly out through the trays, back around there, there are eddies,
283 currents all through those trays. That is we have in the incubator—I have described one of these agitators, there are four of them operating. Now those four agitators acting together throw the air out from each one of them and those streams of air come together. They mix and diffuse and go all places and directions. If you tried to get the direction back in there, one of those fans, you would find the air is going in every direction. I won't say every, but it is all mixed up. It is a difficult thing to define just where the air current is there, if there is any. Now of course you can take agitation or a mixing of that kind and you can find some place in an orderly operating machine where certain currents will go in one general direction, but the general effect of all of those operating together is a turbulence in there, a mixing and agitation of the full air in that incubator. It is just the same as if this large room, only on a different scale, had large paddle wheels on the side which would mix this air all around in here. We wouldn't expect to find anything except a general mixture. And that is how the paddles in here are mixing the air and distributing it throughout the incubator in different directions, some of it passes into the trays, some of it passes out through the trays. Some of it passes over the trays. Some of it even is stationary. That is, there is much of that air that never even circulates and never even comes to the corridor and down to a mixture in there that is go-
284 ing in practically every direction and you will find many cases in there where it reverses and goes back and forth. It is simply a mixing and agitation of the air in the incubator, and that is the circulation system.

Now in addition to that there are provisions in here which I have shown on this drawing 4, marked 17, for the inlet of a certain amount of new air and there is also provision for a certain amount of—I said of a certain amount of air through 18. That is with this continual mixing and agitation there is a little amount of new air added and a little taken out at the same time. There is a mixing or diffusion process in which new air is added to the turbulence and part of it is taken out. Sometimes this outlet is described as the foul air outlet. Of course it is the air in the incubator. It isn't specifically foul air. Any air anywhere there goes out in your outlet opening.

The Court: The view is that it is freshening the air.

The Witness: That is it, continually freshening like any ventilating system.

285 I don't know of any better way to describe it than an agitation, a churning, and a mixing up of the air by these paddle wheels or agitators. It certainly throws the air in every direction. The agitation or the mixing is caused by the wheels—it is caused by these currents which are diffused in every direction.

By the Court:

Q. You say it is caused by these paddles. I suppose it is also caused by the fact that there is a vent box on the sides,—the sides form the current?

A. Well, I suppose it is technically caused by the paddle, and confined by the box, but it has got to go some place when it leaves. Now, that is the operation as far as the air is concerned, that is, as far as the circulation is concerned.

Now, as to the humidity in this case, the humidity is supplied by the water pans which are placed below the heating element, as shown, and also by an atomizing humidifier, which diffuses the humidity in the air, and back through the corridors. The heat is supplied through the heating elements of this machine, which are electrically heated elements, thermostatically controlled, and the thermostat in this particular case is near the front right of the machine, just inside of the housing. I believe that describes its operation.

Now, to go further with the operation of it, the method of the setting of the eggs has been described here, but the trays in this machine are not moved from the top downward. The eggs are set, as they have been explained, in these vari-
286 ous positions, sandwiched in, as it were; for instance, two trays might be set near the top, or in any position, as far as is designated here by these letters (indicating); two trays at one, and, as I understand it, three then, and, later, two more trays are set at the point two.

Mr. Ely: I object to the witness stating what the testimony was.

The Witness: Well, I just want to bring out the fact that there is an essential difference here that I want to bring out, and that is, that in this machine no attempt is made to bring the eggs in the same stage of incubation at the same place. In other words, it is very evident that the trays are set at different places, and are left there for an eighteen day period in that position, and are not moved down until the hatching

stage. Now, that is a very vital difference in the operation of these two machines. That has not been brought out here.

Mr. Ely: I object to that last portion of the witness' testimony, as I don't think he has ever seen one of these incubators in actual operation.

Q. (By Mr. Williamson) You heard the testimony of Mr. Snow, didn't you?

A. Yes, I did. I will support that by data and theory.

By Mr. Ely:

Q. Well, you cannot support it by experience, you never saw one of these incubators working, did you?

A. What?

287 Q. You never saw one of these incubators hatching eggs, did you?

A. Well, if the data which has been put in here is correct, I know what it is.

Mr. Ely: I object to theoretical testimony, if Your Honor please.

Mr. Williamson: I think the witness ought to be permitted to state it.

The Court: Oh, well, I will let him continue now.

Mr. Williamson: Yes, that is the way he understands it is set up. Go ahead.

The Witness: Well, the point that I wanted to bring out in that regard,—

By the Court:

Q. (interrupting) Well, what you want to bring out there is that it mixes the air up, so that the air is uniform all the way through there, isn't that it?

A. Well, that is part of it, Your Honor, but there is another point that I want to come to later, and that is,—I want to show what difference there is when these are put in in this way, or when they are all together,—there is a big difference in the method of conducting the heat from these eggs.

Q. Well, as a matter of fact, the testimony is that, to get the heat away from the eggs, tends to make it uniform?

A. Well, not in that same manner.

Q. Not in the same manner, but it has the same effect?

288 A. No, not the same effect. I would like to state that a little later; I can show why that is.

The Court: All right.

By Mr. Williamson:

Q. Go ahead.

A. I will merely drop that now, and this question, I believe, was as to the operation. I think I have covered the essential features of the operation, though. Of course, the air is regulated, as indicated by things of that kind; I believe I have covered that question.

Q. Well, you were to go on into the detail, or state the nature of the test you made, and the way in which you tested them, and the results; explain that to the Court.

A. Oh, I did not know that that was in the question. The machine itself, as I have described it here, and given the operation of, was tested on November 14, 1932, in the presence of counsel for both sides, in the presence of Mr. Taggart, and Mr. Snow, and, I believe, in part of the tests there was a representative of Paul, Paul & Moore there; I don't think he was there all the time.

Now, in making those tests, the machine was operated without the heat; that is, the test was for the purpose of determining the circulation of air in the machine, and it was operated without heat because, at 100 degrees, and with the humidity, it would be almost impossible to conduct the lengthy test that we conducted; it would be impractical; it would not
289 have shown anything in addition to that.

The flow of the air,—the direction of the flow of the air through various parts of the machine, was determined by smoke tests. Now, these smoke tests I have described previously. But the flow at a few points, where there was more or less of a definite direction, was determined by the anemometer.

Now, in making these tests, I prepared, ahead of time, data sheets which showed the section of the planes where all data was to be taken, and I furnished these sheets to Mr. Taggart, and to Mr. Ely; they were present at the test; they had a data board and sheet, and recorded all of the data which I have recorded here, or, at least, that was the effort; it was all taken in their presence, and every opportunity was made to give them the full benefit of these tests.

After the tests were over, they were asked if there was anything further that they wanted, and they had been given every opportunity to make any tests that they saw fit to make; everything has been available.

Now, in explaining these tests, I will first refer to the test diagram. I have called these tests diagrams, in order to differentiate them from the detail drawings.

Q. (By Mr. Williamson) The scale drawings.
A. Or the scale drawings, which have been generally called figured. Now, the test diagram number 1 is a vertical section through the machine.

The Court: I don't believe I have that one.

290 Mr. Williamson: Down at the bottom there, Your Honor, (indicating).

The Court: Oh, at the bottom; all right.

A. (continuing) Now, test diagram number 1 is a vertical cross section for the purpose of showing where the larger tests were taken, for the purpose of convenience. For instance, on diagram number 1 you will notice, Your Honor, that there are some lines here "aa". Now, that would represent that the test data was taken on that line; and the test diagram letter,—I will refer to that later, but those lines in there are for convenience in locating the point.

Now, if we refer to diagram number 2, in the upper right hand corner, it says, "Sheet Number 1;" that "Number 1" is in pencil because there are several diagrams. In the upper right hand corner, there is "Sheet Number 1, Diagram 2." That represents test data taken along the line which is marked "aa," or, in other words, [the] represents the test data taken in the plane through the front end of the tray, right at the edge of the corridor, right in that plane, at the front,—at the corridor end of the trays, on the left side of the machine, on the side marked "aa," and to the left.

Now, looking at that diagram, we would be standing in the corridor, looking to the left side, and the door of the machine would be on our left, that is, the opening that represents the door there (indicating).

In taking this data, we used, or I used the smoke test,
291 that is, at the various points indicated where the letters are here (indicating). We puffed some smoke, and observed the direction of the flow of that smoke. Now, in order to record it here in a plane line this, that somewhere nearly represents as close as we could get the action of the air;—we had to designate certain letters for the direction. Therefore, I used "out," representing away from the tray; toward the center of the corridor, that would be "o;" in, or "i", represents in, toward the fan, or toward the side.

By the Court:
Q. Away from the corridor?

A. Away from the corridor towards the agitating plane, "d" would be down. If the current is down, it would be marked "d". If it were up, it would be marked "u;" if it were forward, it would be marked "f," and if it were to the rear, it would be marked "r." That is, I tried to designate as close as to the making of these directions, as possible, and it will be handy here for the making of these air combination letters, for instance, it may be "iof;" that is in, out and in front. Now, that means that that was a reverse direction there; it passed in for a while, and out for a while, and then passed forward.

In another case, it might be "i f." That would indicate that it passed in and front in that general direction.

In another case, it might be mixed. Now, there are some cases that I could not see anything but the mixed; it would be all over.

292 Now, in "iu," it would be in and up, and so on, through these various points, this record indicates as closely as possible the direction of flow. Now, there was not any intent to give weight, for instance, in saying "iod,"—it was not intended in the record whatever to give weight to those, in the amount of the flow,—putting the heaviest first, or anything like that, because if it went in, out and down, it was very difficult sometimes to tell which was the most predominating. Therefore, "iof" would have the same meaning as "ofi" in this record. There was no attempt to show the predominating letter first. It would have been very, very difficult to have done so in many cases.

There were,—in this particular diagram data was taken on the center lines of the trays, as shown, that is, the center lines of the tiers of trays are numbered from one to twelve. One, in this case, being the front of the machine, and data was taken in these center lines, and on the cross-center lines, which are shown from top to bottom in the machine.

Now, in this cross center line, we start out,—one of them is,—well, one of them is just above the top tray; one of them is just between three and four, and the next one is between six and seven; and the next one is between nine and ten; the next one is below the lower tilting tray, and the last one down is below the hatching tray.

And then, there is an additional line taken just at the top, just below the ceiling, which is not shown [a] by cen-
293 ter line here, although the figure is there.

Now, in addition to these directions, or this data which was taken on the vertical center lines of the trays, data was also taken in many cases between the trays, and wherever they were taken between the tiers of trays, and wherever taken has been recorded here at the point where they were taken, as closely as possible.

Now, I would like to call attention to some of these figures, although I don't think it is necessary to go through them all. If we were to take a line some pl[illegible] through in here (indicating), and over here (indicating) [illegible] supposing we take the second center line down, we pass [illegible] the top down, as between the three and four tray.

Now, as we pass from left to rig[illegible]m tray to tier one to twelve, we find it going along there, out near the casing; on the center line of tier one it goes out; on the line between tiers one and two, it is out, down and to the right; on the center line of tier two, it is out and right; that means out into the corridor, and to the right,—pardon me, it is the rear; the letter "r" is rear; in this case it happens to be right, too, but "rear" means the rear of the machine. Between the tiers two and three, it is in, out and down, "iod;" that means it is coming both ways. On tier three, it was in; between tiers three and four, it was in, out and front. On tier four, the center line of tier four, it was in and front. Between tiers
294 four and five, it was in, out and front. On tier five, it was in, out and front. On tier six, it was "iof," in, out and front. Between tiers six and seven, it was in and out. On tier seven, it was in and out. Between tiers seven and eight, it was in, out and down. On tier eight, it was in and front. Between tiers eight and nine, it was in and front. On tier nine it was in and front. On tiers nine and ten, it was in and front. On tier ten, it was in and front,—that means forward. On tiers ten and eleven, it was in and front. On tier eleven it was in and front. Between tiers eleven and twelve, it was in and up. At tier twelve, it was in.

The Court: Number twelve is doubtful?

The Witness: Mine is marked, in my table; it must have been a mistake in recording.

The Court: This is twelve (indicating)?

The Witness: Right there. Well, we might go through all of those.

The Court: Well, it is not necessary.

Mr. Williamson: I shall suggest that the witness go from the bottom to the top and read those lines.

The Court: Those letters are plain and mean what they say, and he has described them; there is no need of running through them.

Mr. Williamson: If you think so, Your Honor, that is all right, but maybe he ought to take one or two more, so as to get them in the record. It is pretty difficult for a
295 stranger to take these things up and understand them.

The Court: Yes, that is very true, but you have these figures in here, and I understand them.

Mr. Williamson: All right, but I thought it might be well to state the figures between the bottom and some of the other places,—that he might specify the connection of the bottom to the top.

The Court: If any one wants to get an idea of it, he will get a better idea of it from this than from anything else.

Mr. Williamson: All right.

The Witness: There is another additional thing that I should state on this, and that is, in the lower line, next to the floor, there are some figures there, 490, starting at the left 490, 428 and so on. Now, those figures represent anemometer readings, taken at these points, which represent the flow in feet per minute, as read by the anemometer, placed in there in the plane of flow, and the lines which have above them the "o," "o," "i," and so on.

By Mr. Williamson:

Q. Which show whether they were in or out?

A. Which show whether they are in or out, although the reading shows the amount in or out and the flow.

The Court: Now, if you are going to start on another one, you would not be able to finish it. I think we had better stop here.

296 Mr. Williamson: We will adjourn until ten o'clock tomorrow morning?

The Court: Tomorrow is Saturday, and I won't be here tomorrow.

Mr. Williamson: We will adjourn until Monday morning?

Mr. Ely: If Your Honor please, I had hoped that we would get through; I will have to be in Washington on Tuesday.

The Court: I am very sorry; I am due tomorrow in St. Paul, and, what is more, we won't be able to resume here until two o'clock on Monday. I am very sorry that I could not hurry you along any faster, because these matters are technical to me.

Mr. Williamson: That is satisfactory to me, Your Honor. I have tried to expedite this case as much as we could.

Mr. Ely: Will there be any possibility of adjourning this case so that I can take care of that case on the 22nd, and then come back here later?

The Court: I don't think we can; we have been very busy in this term of court; I have not wasted an hour in this term, and I am pressed for time, as well as you are, and you will have to conform to this Court as to the hours.

Mr. Williamson: Adjourned until ten o'clock on Monday?

The Court: No, at two o'clock on Monday; that is
297 because I am required to be in St. Paul in the morning.

Mr. Williamson: Might I just offer,—were you through with your explanation, Professor?

The Witness: I have not finished the tests yet.

Mr. Williamson: All right, never mind.

The Court: We will adjourn at this time until two o'clock on Monday afternoon.

(Hearing adjourned until November 21, 1932, at two o'clock p. m.)

---

298 Minneapolis, Minnesota,
November 21, 1932,
2 o'clock P. M.

Pursuant to adjournment the following proceedings were had at the above time and place as follows:

Frank B. Rowley resumes the stand.

Direct Examination.
(Continued).

By Mr. Williamson:

Q. Just before the adjournment Friday evening you had been telling us about your tests of the Snow incubator and

used one of your test sheets. You said you wanted to go on to another. Please proceed in your own way about these tests of that Snow incubator.

A. I think I had finished on the first test diagram, and now I would like to move back into the center line of the corridor and show the circulation of the air by the same method.

Q. Identify your sheets as you go along.

A. The data is here recorded on Test Diagram No. 2, Test Diagram Number 2.

The Court: That is this one.

The Witness: Well, that is a different sheet number.

The Court: All right. I have got it.

A. Test Diagram Number 2, and up on the line in the upper left hand side is marked center line of the corridor looking left. That means, that this test data was taken
299 vertically in the center line of the corridor but the records were made looking towards the left side of the machine in order to designate in and out. Now, points were tested for circulation by the smoke method, the same as described in the first test diagram, the one just explained, and the marks indicating the flow or direction of the air flow are shown on this diagram in as close as possible to the positions where the smoke apparatus was held for the test. Now I don't think it is necessary to go through with all these points, perhaps, but if we take the first center line down from the top as an illustration, between tiers one and two, that is marked "mixed." That means the flow was mixed and it is so indefinite and turbulent we couldn't settle on which direction we should mark it. The next one along that same horizontal line is in the center line of the trays 4. That is marked "mixed up", meaning that it is a mixed direction but the predominant was up, more up than down. Between 6 and 7 on the same line it is marked "mixed down". Means that the air is mixed flow, turbulent, moving in a general down more than up, and so on. On center line 9, it is "mixed down". And between 11 and 12, it is "mixed down". Now, as an illustration, we might move down to the center line which passes between trays numbers 6 and 7 from the top down. The first one between 1 and 2, tiers 1 and 2, "out right". That means away from the observer and to the rear, instead of to the right. If I say right it means rear.

On the center line of tier 4 "mixed up." On the center
300 line between 6 and 7 "out front". On center line 9 "mixed horizontally."

The Court: In other words, these letters show for themselves what they are marked.

The Witness: Those are the readings exactly as I took them, Your Honor, and I just wanted to make it clear.

The Court: I understand all of them here.

The Witness: Then I don't think there is any use—

Mr. Williamson: Whenever you get enough so that the Judge understands you can go on to the next sheet.

The Court: I understand. He started to explain those, the other data.

The Witness: Then I will go on to the next sheet; hurry through these.

The Court: The next one marked "test diagram number 2" is marked the same way, isn't it, by letters?

The Witness: Yes, that is true, "test diagram." The only difference there is marked on line DD and test diagram 1, that means we moved over to the center of the trays. That was taken on the line DD over to the left of that diagram, Your Honor.

Mr. Williamson: Step up and show the Judge.

The Court: Right here.

The Witness: It was on that line right down the center of the tray in the same position as shown on the
301 chart test diagram. And the letters on here indicate the same as on the other test diagrams, the direction of the flow of the air as taken by the smoke.

Q. Read enough so that the record will show a little data that they can refer to the sheet from.

A. Supposing we take the top center line, the line just above the trays. The first reading between the wall and tier number 1 marked "O. D. R." That is out down right—rear. The next reading between 1 and 2 is marked "I. R." which means in and rear, the rear of the machine. Between 2 and 3, tiers 2 and 3, "F" means forward. Between tiers 3 and 4, "in and forward." 4 and 5, "out and forward." Between 5 and 6, "out and forward." Between 6 and 7, "in and up." 7 and 8, "in and forward." 8 and 9, "mixed forward." 9 and 10, "mixed forward," and so on. Now I don't think there is any reason for reading more. They are all apparent on here.

The Court: I understand these diagrams.

Q. All right. Pass on to the next sheet and we will get them in.

The Court: What sheet have you got now?

The Witness: Now it will be test diagram number 3. There are two diagrams 3, and the first one will be line CC.

Q. Distinguish them some way, 3A or 3B or something.
A. This one I will use is test diagram 3.
Q. You mean test diagram, sheet 3.

302 The Court: Test diagram, sheet number 3.

A. The first test diagram 3 is marked sheet number 1 in the upper right hand corner and in the upper left hand corner it says, "Data taken on line CC, diagram number 1." That means it was taken down line CC, on test diagram No. 1. Now this shows the same data, the same general data taken on the other side of the machine along the line CC, which is just at the front of the trays, front end of the trays on the left side—or the right side.
Q. Looking from what, please?
A. Looking from the corridor towards the trays.
Q. And back to the doors, I suppose.

The Witness: That is here, Your Honor.

The Court: Yes, I understand it is right along here.

The Witness: Right along there, that is correct. Now there is one other test diagram number 3.

Q. Distinguish it in some way from the other 3.
A. Which is marked in the upper right hand corner, sheet number 2, and the upper left hand side on the line "data on line DD, test diagram number 1."

The Court: I don't believe I have got that one.

The Witness: Test diagram 3. There is a 2 up in here.

The Court: Here it is.

The Witness: This sheet shows data taken along the vertical center line of the trays as indicated on the test
303 diagram number 1 and is substantially the same as the one on the opposite side of the machine. That is it records the data in the same way and shows whether the flow is in, up, down, right or wherever the air is flowing as close as we could judge.

Now that completes the diagrams on the sectional views interior of the machine, with the exception of test diagram number 4, which shows the horizontal section of the machine. That is a horizontal plane through the machine and on that diagram are shown the speeds of the agitators. There are some notes there. The upper right hand corner is marked sheet number 1. There is only one sheet for this diagram. The speeds of the agitators in each case are given right in the center line of the shaft in the machine at the four points. The agitator on the upper right hand side, 204 R.P.M.; on the upper rear, 184; the lower right—that should be right instead of rear, the lower rear of the machine, 190 R.P.M. and the one on the sheet in the lower part of this diagram, 225 R.P.M. The motors are indicated here as half horsepower Wagner, 1725 revolutions per minute. And in the rear is a note indicating the position of the humidifier, which was in position when the tests were made. That completes the data on these test diagrams.

Q. Are you through with them? How many sheets are there?

A. There are six. No, wait a minute. Pardon me. There are seven.

304 Mr. Williamson: The seven sheets identified by the witness are offered in evidence on behalf of the defendant, to be marked Defendant's Exhibits M-1, M-2, M-3, M-4, M-5, M-6 and M-7, and with the words "Professor Rowley's test data sheets of the Snow Incubator now in Minneapolis and in evidence as Defendant's Exhibit F."

The Court: Received.

(Defendant's Exhibits M-1 to M-7 inclusive marked for identification by the reporter.)

Q. If you have not already done so, please state the speed at which the agitators were running at the time you made the tests of this Snow incubator.

Mr. Ely: He has already given them.

The Witness: I have already given them.

Q. Have you already given them? All right. Now, Professor, you heard Mr. Taggart's testimony, did you not?

A. I did.

Q. And he made reference to a trip to Sleepy Eye, Minnesota, at which he and Mr. Ely were shown, at their request, a specimen of Mr. Snow's steam heated machine. Were you present at that time?

A. I was.

Q. Can you, from memory or by reference to any record that you have got with you, fix the date when that occurred?

A. I can.

Q. Well, do it. What was the date?

305 A. On September 29, 1931.

Q. 1931?

A. 1931.

Q. State just what was done at that place at that time in your own way, making it as brief as possible consistent with clearness.

A. At that time we first inspected the machine and Mr. Ely and Mr. Taggart were given a chance to go over the machine which was at Sleepy Eye. And then we made some smoke tests. That is I conducted those tests, showing the smoke flow in the corridor through the line parallel to the lengthways of the machine, in a plane of the end of the left trays and then in the center plane of the corridor and then in a plane on the left side, parallel with the end of the trays —in the plane of the end of the trays at the left side of the corridor is clearer.

Q. Did you keep records of those tests?

A. Those tests were recorded as in and out flows and mixed. The tests weren't as elaborate as those we have conducted on this machine.

Q. You mean this machine in Minneapolis?

A. On the machine in Minneapolis. They were much shorter, merely to show the in and out flow and some of the predominant up and down flow in the plane at the end of the trays and also in the center of the corridor, center line of the corridor. The revolutions of the fans or agi-

306 tators were also taken at that time, I believe.

Q. Did you tabulate those results? Did you tabulate any of the results of the tests?

A. I tabulated those that I have mentioned.

Q. Have you got the tabulations with you?

A. I have in my case.

Q. Produce them. Have you got them in your hand now? A. I have.

Q. Identify them and describe them, but make it as brief as you can consistent with clearness.

A. I will mark these in order to identify them as—

Q. Sleepy Eye?

A. Sleepy Eye.

Q. Get the Sleepy Eye on them.

A. Sheet Number 1, which is on the plane, taken at the plane of the end of the trays from the corridor looking left,

to the left side, and the machine is designated the same as this one was tested here, that is looking from the door rear.

Q. You mean facing from the door?

A. Yes, facing from the door.

(Defendant's Exhibits N-1, Sleepy Eye Test Sheet Number 1, Defendant's Exhibit N-2, Sleepy Eye Test Sheet Number 2, and Defendant's Exhibit N-3, Sleepy Eye Test Sheet Number 3, were marked for identification by the reporter.)

Q. Proceed in your own way and describe those tests as far as you think it is necessary and make it brief.

307 A. Since the method of recording was the same as in the tests made on the Snow machine in the Flour Exchange—

Q. Minneapolis?

A. Minneapolis, I don't think anything needs to be said.

Q. State whether or not the results were substantially the same or whether they were different.

A. I would like to explain just a trifle.

Q. Well, explain it in your own way. Go ahead.

A. Those figures are used the same, but the tests on the diagrams were at that time made primarily here to show the in and out flow and these lines above top tray and so on, below, we had no drawing at that time. This is below the third and fourth tray and below the sixth.

The Court: I am looking in.

The Witness: Yes, you are looking in the left side from the corridor.

The Court: This is right.

The Witness: Yes, that is rear.

The Court: And this is?

The Witness: This is front, you are looking in the left side of the machine.

Q. If you are going to make any explanation speak so that the reporter can get it down, please.

A. That is looking in from the corridor towards the trays and the record, of course, was made as previously explained.

308 Now sheet number 2 is taken on the same line at the right side of the machine looking from the center of the corridor into the trays at the right. This then becomes the front of the machine and this the rear. The elevations are the same as in the other sheet.

The Court: These are the line of trays.

The Witness: Those are the center lines of the tiers of trays, yes.

The Court: Yes.

The Witness: Test sheet number 3 was taken through the center line of the corridor looking to the left. That is, we were standing on the right side of the machine looking left, and this is through the center and the records were taken showing the action of the smoke at the points as indicated on the center lines of the trays and the vertical lines as shown.

Q. Do the speeds of the agitators appear on your diagram sheets?
A. I don't see them. I don't believe they are here.

The Court: You had the speeds on another sheet?

The Witness: Yes, I think they are in my notebook. I will have to look it up.

Mr. Williamson: Refer to your notebook while I offer those in evidence.

Q. Are they three sheets?
A. Three sheets.

Mr. Williamson: The three data sheets identified by the witness are offered in evidence on behalf of the defendant, marked Defendant's Exhibit N-1, N-2 and N-3, and
309 with the words "Professor Rowley's test data sheets of the Snow Sleepy Eye steam heated machine." I have got to keep these things distinct in the record and for the argument.

The Court: Received.

Q. Refer to your notes and state at what speeds the agitators were run at the time these tests were taken.
A. I have here in my notes September 29th, speed of the agitators 210, and 208.
Q. One—
A. One note here 210, that one agitator.
Q. There are four agitators in the machine, are there not?
A. I don't find the other two, but they are substantially the same thing. I don't find them in my notes.

The Court: That is the way they were running when you took those tests?

The Witness: That is the way they were running when I took those tests.

Q. All four of them, as far as you could judge?

A. Yes, this represents the speed.

Q. State briefly, in a general way, whether the results of the tests that you made at Sleepy Eye show any different results, in substance, as compared with your tests of the Snow machine here in Minneapolis as far as they go.

A. No, in substance the tests show the same action. Of course any different machine will have perhaps air motion at a different—at a certain point a little different
310 under different conditions. That would be due to the machine, perhaps, and to the agitator speed and so on, but in substance they are the same.

Q. So far as the air circulation is concerned?

A. As far as the general air circulation of the machine.

Q. As far as the general air circulation is concerned. State how that machine compared in size with the Snow machine here in Minneapolis.

A. Well, I didn't measure the machine, but I think it is just a little bit higher than the Snow machine, a little more head room.

Q. How about the length and width?

A. The length and width were substantially the same, the same trays in it.

Q. How about its general structure, with the exception that that one was steam heated whereas the one in Minneapolis was electrically heated?

A. Well, the general structure is the same.

Q. Trays and everything hanging the same?

A. Yes.

A. State whether or not after you got through making the tests which you did make of that Sleepy Eye machine at that place, Mr. Ely and Mr. Taggart were invited by me and permitted to make tests themselves of that machine at that time? A. They were.

Q. And did they make tests?

311 A. They did.

Q. And did they tear the machine apart more or less and take out trays and tiers of trays and all that, in our presence?

A. Yes, they first tried to take anemometer tests on the rear by spreading the trays, separating them, and after trying that they finally removed the trays and they took anemometers in the back with a great number of tray space removed, showing the circulation by anemometers at a diagonal direction.

Q. State whether or not in those tests at Sleepy Eye, streamers, strips of paper or cloth, light cloth, were applied at various points in the machine by Mr. Taggart in making his tests?

A. Yes.

Q. The tests which he conducted. State whether the action of those streamers showed anything different than your smoke test. State whether the movement of those streamers helped to show the circulation in that machine and whether or not the circulation so shown was anything different than shown by your smoke tests?

A. Of course the streamers were placed in a different position than my smoke tests were taken. Those streamers were placed back along the wall and diagonally across and a streamer fluttering in the air will show a general movement in one direction, but it can't show a downward movement, of course, because the streamers can't leave the ceiling.

312 Q. In the tests of the Snow machine you made here in Minneapolis in the presence of counsel and Mr. Taggart, a great many streamers were in the machine, were they not? A. Yes.

Q. State whether or not the action of those streamers showed the movement of the air to be substantially as shown by your smoke test?

A. You refer to these tests here?

Q. In the Snow incubator here.

A. Yes, practically the same with this exception, that a horizontal streamer shows only one direction. It shows not up or down.

Q. Did you make any anemometer tests in that Sleepy Eye machine at Sleepy Eye at the time you referred to?

A. Not that I recollect, no.

Q. But did Mr. Taggart make anemometer tests?

A. Yes.

Q. Now, Professor Rowley, you have described the methods in which the air is circulated in the machine of the Smith patent here in suit, and in the commercial specimen of the Smith machine that you have seen and tested and you have described the method of air circulation in the two Snow machines, the electrically heated one here in Minneapolis and the steam heated one at Sleepy Eye. Please compare, in a general way and as brief as you can, and point out the identities and differences of the two sets of machines, I mean of the Smith machine as compared to

313 the Snow machine or the Snow machine as compared with the Smith machine. I want you to just make a

summarized statement, as brief as you can, of the features of identity and the features of difference present in the air circulations of those respective machines.

A. You want me to confine that to the air circulations and not to the method—

Q. I am confining it now. I am going to ask you another question later. I am confining it now to the air circulation, but make it as brief as you can.

A. In the Smith machine there is a little difference of course—difference there as to the machine or structure shown in the patent and the actual Smith machine in that those canvas strips of course, were omitted.

Q. You mean in the commercial machine?

A. I mean in the commercial machine, in that those canvas strips were omitted. Now, in the Smith machine there are trays on each side of the corridor, with a central corridor. There are curtains on each side of the corridor at the end of the trays. There is a fan placed at the top of the corridor in what you might call the false ceiling for the purpose of blowing or forcing the air in a column down through the corridor underneath the curtains and up through the—circulating it up through the trays on either side of the machine, from where it goes back, the majority of it goes back to the fan for re-circulation. Now, that is briefly the circulation of it. There is a confined channel or a col-
314 umn of air which moves downward to the bottom of the trays and then filters up through or between the trays, up to the top where it is brought back to the fan again, and circulated. Now, in that particular machine there are two fans shown in the patent specifications and four in the commercial machine, which is merely a matter of number along the corridor. The principle of action is just the same. In the Snow machine the trays are present, the same type of trays. They are all different sizes and so on, but the trays are in the sides. There is a central corridor without any curtains. The trays are set farther from the rear walls in the Snow machine and back of the trays on either side there are two four-bladed agitators or wheels in there which are rotating and stirring up the air on the back walls of the machine, throwing it outward mostly in a centrifugal direction, that is by centrifugal force in a tangential direction from the blades, slightly forward at the tips of course, where it passes out, part of it along the ceiling, confined of course along the ceiling or the side walls or the floors from either side where it either gets in the corridor in some places or in some places it may cross clear through. Some

of those air streams pass clear through the trays at the back and return in a course which is more or less turbulent in the center part of the fan or in the central section of the fan, I might say. Others pass part way through the trays and back, and they pass in general in undefined cur-
315 rents around through the machine. That is in the Snow machine there is no attempt to have a defined current of air. It is an agitation, mixing, stirring up of air, and that air, even in the places where it flows towards the eye of the fan, is not a true stream-line, but it is more or less turbulent, up and down, and so on, although its movement in that section towards the eye of the fan or agitators on the side which carries the air in which is thrown out around the sides. Now, in the action of the air circulation in the Snow machine, there is a question of principle brought out there that is different than the Snow machine—I mean than the Smith machine. The air velocities and agitating blades are at the side of the machine. Now, that has two effects. In the first place if there are any cold places, if there is a cold outside wall in the incubator, if it is in a cold room with a temperature in the incubator at a hundred degrees, the cold spots in that incubator as far as the outside is concerned, are more apt to be along the outside walls. Now, high velocities or circulation of air, high agitation there on those outside walls, stirs that air up and keeps the outside walls outside—I mean the inner surface of the outside walls at a better temperature, at a more uniform temperature than would be the case if the air was merely filtering up past those surfaces. The difference really is in the Smith machine the air is confined and directed in a specific channel for a specific purpose, which is down through the corridor and up
316 through the trays. In the Snow machine there is a general agitation and it isn't directed down through the corridor. It is mixed—

Mr. Ely: Pardon me, just a minute. If you will stop waving your hand.

Mr. Williamson: I am not waving my hand. I am not. Well, I deny it.

The Witness: It is generally agitated and mixed up, and, as I want to explain, it has a different function as far as heating and taking care of that incubator. There is a different principle which does not come out in the air circulation, a different principle in those two machines which hasn't been brought out here.

317 By Mr. Williamson:

Q. Bring that out.

A. I will have to refer to some of the exhibits. I would like to take Exhibit 2, I believe it was. (Exhibit submitted to the witness.)

Mr. Ralph Williamson: I have a list of exhibits here, Mr. Rowley, if you care to refer to those. (Document submitted to the witness.)

Mr. Williamson: I believe that is not in evidence yet.

The Witness: Well, I would like to know the number of it.

Mr. Williamson: I suggest that you wait until the Judge is through writing.

The Court: No, I can hear him all right.

Mr. Williamson: This is our copy, Your Honor.

Mr. Ely: Here is Plaintiff's Exhibit 2 (Document submitted to the Court).

By the Court:

Q. Do I understand you to say that you think that in the Snow machine the distribution of the air by a fan is more liable to eliminate a cold spot?

A. Yes, on the outside wall.

Q. On the outside wall? A. Yes.

Q. Why?

A. That is due to the higher velocity. Now, the principle, as an illustration, is this: We know that we take the
318 cold air from a window, where there is moisture condensed on that window; we know that if we place a fan against that, and blow the air against it, it clears up the window.

Now, the principle there is, that the,—I don't want to get too technical here,—but the surface coefficient of transmission is increased by the action of that air. Therefore, if you increase the surface coefficient of transmission of the glass, that means that the temperature drop necessary to force the heat from the air to the surface of the glass is less; it therefore means that there will be a less difference in temperature between the air and the glass. That is the theoretical reason for it. Now, practically, of course, it brings the air and the glass more nearly to the same temperature.

Now, in the incubator, we have the same problem, to a more or less degree, depending upon the location of the incu-

bator, in a cold room, or in the surrounding air; the incubator temperature runs somewhere around,—that is, the air temperature within it,—runs somewhere around 100 degrees, and I suppose it might be, in a room which, during the incubating season, might run 60 or 70 degrees; I don't know; it depends on the surrounding air. But, at any rate, between the air on the outside of the incubator, and the air on the inside, there is a drop of temperature which may run 20 or more degrees; it may run considerably higher than that.

Now, that drop of temperature is divided up between
319 the air on the outside, and the air on the inside, and if we would follow those through,—that is, if we were to take a thermometer and follow it through from the outside,—from the air on the outside of the incubator to the air on the inside, we would find, as we follow through the wall on the outside, that the temperature would rise slightly toward the inside temperature.

Now, as we get on the outside surface, with the thermometer, or thermo-couple,—I prefer to use a thermo-couple, because it would be impossible to do it with a thermometer,—the temperature on the outside surface of this wall is slightly higher than the outside air temperature.

Now, as we pass through the wall with this thermo-couple, that temperature gradually rises in each stage, until we reach the inside surface of the wall. Now, when we reach the inside surface of the wall, that temperature is still lower than the air temperature in the incubator.

Now, a practical case might be the average wall; for instance, in the wintertime we know that the temperature on the outside wall of our house depends entirely on the construction and the temperature differences, and it may be from five to ten or fifteen degrees below the air temperature.

Now, if we take the window glass temperature, where there is less insulation on the glass, that temperature on the glass may have a material drop. It may have the glass temperature, which, of course, might be the freezing
320 point, because we cannot get frost on that otherwise

Now, the same principle holds in the incubator, and there is a temperature on the outside surface of the incubator which is lower than the air temperature in the incubator; and the amount of that depends on the insulation; it depends

on the air circulation in the incubator, and it depends on the temperature difference between the air inside and outside.

Now, if we take a given condition for the incubator,—let us assume an outside air temperature, we will say of 60 degrees, as an illustration, and an inside temperature of the incubator of 100 degrees. Now, the temperature drop would be greater between the air on the outside and the inside surface of the wall, of you had no agitation there, then it would if you had agitation; or, in other words, with heavy agitation on the outside wall, you can bring those surface temperatures very nearly up to the inside air temperature; without agitation, you cannot do that; you would be getting a drop, because there is a heat resistance, and when you have a heat resistance you must have a temperature drop for the heat flow.

By the Court:

Q. You are taking it for granted that the outside wall will naturally be a little colder than it otherwise would be, because it has the effect of the cold air on the outside, and therefore the inside surface of the wall might produce what you call a cold spot; I suppose that is true?

A. Yes, that is true.

321 Q. The point that I am interested in is why your machine would distribute the heat, to break up these cold spots, more than the Smith machine?

Mr. Ely: I don't think this man has ever been in an incubator.

The Court: Well, I was just asking him.

Mr. Williamson: This man is called by experts on heating and ventilation all over the country.

The Court: Well, we are now accepting him as an expert for this purpose.

By the Court:

Q. As I understand your machine, the way the air is driven, it is driven by these side fans, and, as you say, it mixes the air? A. Yes.

Q. Doesn't the other machine draw the air under the curtains, and mix it in the same way?

Mr. Williamson: No, sir, not by any means.

A. No, sir.

By the Court:

Q. That is, there is a current of air carrying the fanned air within itself, and off, and the intent is to mix it, and it drives it around, doesn't it?

A. There is a current of air, but it is of very much less velocity,—the velocity from the tests that have been submitted here by Mr. Taggart. I have not checked those by anemometers, but if you look at these test sheets, you will notice that the velocity of the air circulating up
322 through the different trays in this machine is very much less than the eddy currents on the outside of that, as shown in the Snow machine.

Q. Then, am I to understand that your contention is that because the air is moving at a less velocity, that therefore it is not liable to break up the cold spots?

A. Yes, the question comes at the point of the surface coefficient. I have a pamphlet here; I might show that to Your Honor.

Q. (interrupting) No, just explain that as far away from your technicalities as possible.

A. When heat flows from the air to the surface, or from either way, there is a drop of temperature that occurs there, because there is a heat resistance. Now, universally, that resistance is called the conductance coefficient, or the surface conductance of the surface; that is the technical term for it.

Now, the surface conductance means the number of British thermal units which will pass between the air and the surface, per hour, per square foot of area, per degree difference in temperature between the air and the surface, or, in other words, the higher the surface conductance is, the more heat will pass for the given difference in temperature.

Q. Well, the air in that incubator is already heated, and if we hold the air right there, or it passes slowly, with the same degree, as if it were passing more rapidly, would
323 the rapid passage of the air have more effect upon the wall than the slow passage of the air?

A. Yes, the rapid passage of the air would reduce the temperature between the surface and the,—

Q. That is your point?

A. That is my point, yes; that is only one point on that matter, but that is the point; that is the very definite point as to the cold outside surface.

Q. (By Mr. Williamson) Go on and explain,—

The Court: (interrupting) Just a minute. That is, there is a wall there, and it is a little colder than the general air on

the inside. If we fan the air against that, and if the air is at a certain degree of heat,—if the air is up to 60 degrees, we will say,—then we fan air along the wall that is 60 degrees, your point is that the air passing along the wall at 60 degrees is more apt to tend to warm that spot, more than if it is just standing still; that is your point, is it?

The Witness: Yes, that is it, that is, assuming that the other side of the wall is colder than the inside.

The Court: Yes, I am assuming that, of course.

The Witness: Yes, it would work that way. In other words, the theory is that it changes the surface coefficient.

By Mr. Williamson:

Q. Well, are you through with your answer? If so, then will you explain how the heat transmission is affected in these incubator machines, the Snow machine and the
324 Smith machine,—how the heat is transmitted.

A. Well, first I would like to make,—

Q. (interrupting) Do it in your own way.

A. First I would like to make a general analysis of the problem of incubation as I understand it. Now, from the data and so on that has been submitted here, I think it is evident,—

Q. (interrupting) Speak a little louder, please.

A. (continuing—the problem of the incubation of an egg is, first,—that is, I am speaking just of the changes which take place in the egg. We have been told, and shown here by these curves, that, as the egg is placed in the incubator, in the first stages of incubation, it absorbs a certain amount of heat, that is, the egg must have heat, and that heat must be absorbed from either the air, or surrounding objects, to have it progress in incubation. It gradually develops heat within itself. This developed heat, that is, in the later stages, must be dissipated from the surface of the egg shell. That is, it is a problem, as far as the heat is concerned, of transmitting the heat into the egg, in order to bring it to a temperature, and also to take away this surface moisture evaporation, which takes place at first; and, second, in the later stages, it is a problem of getting the heat away from the egg, or cooling it.

Now, that is part of the problem; it is a problem there of heat control.

Now, another part of the problem is that of moisture
325 control. There is a certain amount of moisture evaporation from the egg in the first stages of incubation.

If the air remains too dry, we are told that the evaporation would be too great, and, if the air is too wet, or too moist, the evaporation will not be enough. Therefore, the humidity of the air has got to be controlled. That is another part of the problem.

Now, the third part of the problem is that of a reasonable amount of new air supply in order to take care of the oxygen required in this exchange which is going on through the egg, in which oxygen is exchanged or taken in, and carbon dioxide is given out; that is, there must be oxygen; if we were to confine it, there would be no oxygen, and no life. There must be that process going on, and, of course when this oxygen is being carbonized, that is the process that is going on in the egg uniformly,—we are forming carbon dioxide, or combustion is really going on, and we are generating heat within the egg.

Now, with the exception of the fact that those eggs need to be turned for other reasons, those are the three fundamental steps, as I see it, in an incubator; first, temperature control; second, humidity control, and, third, a reasonable amount of new, fresh air, so that the air is supplied. It is the same problem in human life.

Now, to analyze that, what methods do we use, or what methods may be used for this control? I think, as far as the air supply is concerned, we all recognize that that is a matter of taking in some air, and letting out some other air,
326 or, it is a matter of keeping that air pure, and a sufficient amount of new air, by an exchange or intermixing process.

Now, as far as the humidity is concerned, that may be added to the air, or taken away, whichever is necessary, by several processes, either by some steam, which is moisture, or by atomization of moisture, or by evaporation of moisture from pans. There are several ways of taking it away, or supplying it. That does not seem to be at issue here. That question of humidity has not been brought out.

Now, as far as the heat generated is concerned, the heat is dissipated from the surface of the egg shell; that is the only place where it can get out, and when we take these individual cases we note that there is a large amount of heat generated within the egg. Now, that heat must be dissipated from the egg shell, in one of three ways: First, conduction; second, convection, and, third, radiation.

Now, an additional amount may be exchanged by evaporation, and that is taken care of in the humidity control. But

the thing that we are concerned with in this heat problem is the transmission of heat to or from the egg, in order to control the internal heat generated, and the internal temperature.

Now, those three problems, temperature, humidity and air supply, are nothing more than heat ventilating problems. That is one of the heating and ventilating problems that we have in our every day work.

327 Now, I want to show, as closely as I can, what happens, or how this heat is transmitted from the surface of the egg, and the relative importance of each one of these steps.

Now, in regard to the conduction from the surface, that conduction must take place by contact with some surface. If you were to contact the surface of the egg with cold surfaces, you would have the heat conducted directly to those surfaces by contact; that is, it would flow from the egg shell to the contacted surface; that would be conduction.

Now, of course, in an incubator there are not very many points where the surfaces are in contact with colder surfaces; I mean, that the egg shell is in contact with colder surfaces. Therefore, there is not such a large amount of transmission by conduction.

The next problem is the question of the amount which is conducted away from the egg by conduction, or by convection of air currents. Now, convection is merely the widening of the air on the surface of the egg, that is, the widening of the air, or carrying away of the heat by convection currents.

Now, the closest conduction coefficient that we have, the closest material,—I have determined many of these surface coefficients in my research work at the University,—and the closest coefficient that we have is that of the smooth plaster on the wall; that is very nearly the same as an egg, and it agrees with all of these surfaces in that class, so we can accept that as a coefficient for the egg shell.

328 We also have the radiation coefficient for the same material, which I will take up later.

Now, the coefficient of surface conduction by air currents, which I have determined over there at the University,—have been determined for outside surfaces, or exposed surfaces of building materials, and so forth.

For a surface of smooth plaster, the surface conduction coefficient for air, still air,—what I mean by still air is that with no artificial circulation,—just merely what you get by normal

convection. The surface coefficient is approximately two British thermal units per square foot of area. These are all on a square foot basis, per hour, and per degree difference between the surface and the surrounding air.

Now, that surface coefficient of two has been determined for various mean temperatures, and for temperature differences between the surface itself and the surrounding air, where the surrounding air is at the same temperature as the outside, or surrounding objects, or, in other words, that coefficient for two, or of two, for plaster, has been determined as a combination of surface conductance, as a coefficient, which is convection and radiation combined, because that surface is actually radiating heat as well as convecting it. So, from that, we must take the radiation coefficient, which I will show in just a minute; it is practically one per degree. Therefore, the conduction coefficient, which we must use if we are going to analyze this problem, is one, that is, one
329 point, which means that one British thermal unit is transmitted per square foot of the area, per hour, per degree difference in the temperature between the surface that we are talking about, and the surrounding air.

Now, that is the coefficient which has been determined for 100 degrees mean temperature approximately,—that is about as close as we can get,—100 mean temperature; that is about the temperature that we are working with in the incubators. I am coming back to that point later. At any rate, the next point is the heat which is transmitted from the egg by direct radiation.

Now, in all of these discussions that I have heard about these incubators, and that I have read in the patent, I have not seen any of them state anything about the heat which is transmitted to and from the egg by radiation, direct radiation. There has been talk mostly about convection currents. Now, heat transmission from the surface to the surrounding objects, or to the surface, depending upon the temperature differences by direct radiation, has nothing to do whatever with the convection currents.

By the Court:

Q. In other words, it is radiating heat?

A. It is radiating heat, or receiving heat, either way.

Q. From the air?

A. Yes, that is, the surface is both radiating and receiving heat, and, if there are two surfaces together, or in proximity,

330 Q. Or from the air?

A. Yes. That is, the surface is both radiating and receiving heat, and if there are two surfaces together, or in proximity, the hotter surface will radiate heat to the colder surface.

By the Court:

Q. In other words, where the eggs are advancing in incubation, they will be radiating some heat into the air, and that will be carried around?

A. Well, Your Honor, the radiating heat does not affect the air that passes through the air; it has got to strike something; it radiates until it hits a colder spot.

Q. Well, it must hit something?

A. Yes, that is right.

Q. It must hit something that is colder, and then it goes into the air?

A. Yes, if the air contacts there, yes, that is right. The law governing radiation is the well known law of Stefan and Boltzman, and it states that the radiation between two surfaces is proportional of the fourth power of the absolute temperature between those surfaces; that means that it is proportional to the fourth power of the differences of the absolute temperatures of these surfaces, and by absolute temperature I mean that we have to go down minus 460 degrees Fahrenheit, because we are talking about the Fahrenheit scale of temperatures.

Now, for the plaster surface, the coefficient to be used,
331 under that law, is .151, and if we calculate from that the radiation coefficient, we find that each square foot of surface would radiate one British thermal unit, per hour, per degree difference in temperature between the surface and the surface of the surrounding objects, or, in other words, for a per square foot of area, the radiation coefficient is substantially equal to the convection coefficient per degree difference of temperature. Now, we must not confuse these two coefficients, because transmission of heat is going on by both, and the temperature difference for convection is between the surface of the egg and the air, while the temperature difference for radiation is between the surface of the egg and the surrounding objects, and if there is no temperature difference there, there can be no loss of radiation, where there might be convection.

Have I made that clear, Your Honor, what I am talking about?

The Court: Yes, I think so.

The Witness: (continuing) Now, I would like to call attention, for just a minute, to, I believe, it is Plaintiff's Exhibit 2,—I am not sure,—at any rate, it is the curve showing the heat units, which are given off by eggs in various stages of incubation.

Mr. Williamson: Plaintiff's Exhibit 2.

The Witness: Plaintiff's Exhibit 2, I believe.

Mr. Williamson: That was used by Mr. Taggart, as I understand it.

332 The Court: Have you two of those?

The Witness: No. I would like to have you see it as I go along on the exhibit. This is our own copy.

Mr. Williamson: Give that one to the Judge, if you can.

(Document submitted to the Court.)

The Witness: Before I take this up, I would like to amplify just a little this radiation coefficient. I stated that the coefficient was practically one. I find here in my notes that it is 1.06, as I have calculated it, for 100 degree mean temperature. The convection coefficient, then, as I have stated, is one per degree difference in temperature between the surface of the egg and the air. Now, that is for what we call still air, that is, it is air which has no artificial current; it is merely of normal eddy current. Now, if we were driving the air at any velocity over these surfaces, that coefficient is increased. The coefficient, for instance, at fifty feet per minute is 1.15; that is the coefficient at fifty feet per minute. That assumes, then, that, the air would be passing over the surface of the egg at fifty feet per minute. Now, from the test data which has been shown, the air around the egg itself is apparently very much less than that; it is very low, because those eggs are confined close together in the trays, and when the air is circulating up through the trays, the air velocity in there is very slow; and, furthermore, if we give the full surface of that egg, which is in contact with other eggs,—

if we give that full surface the benefit of convection
333 current, all around the egg, then we are very liberal if we allow a coefficient of one as the transmission coefficient, for air to the surface of the egg, and take the full surface of the egg into consideration for convection.

Now, I would like to refer to Plaintiff's Exhibit 2, and I would like to take an egg, which is in the seventeenth day of incubation, as an example, from this chart. The heat units

generated by that egg per day are shown to be two and one-half large calories. That means that there are ten British thermal units generated in that egg in twenty-four hours, which must be dissipated from that egg in order to keep the temperature down. That is one of the heat problems in incubation.

Now, in these incubators that we are speaking of, we can take an average tray of eggs, we will say, of 134 eggs, as an average tray, you understand, and if we take 134 eggs, at ten British thermal units per egg, we have 1340 British thermal units, which must be transmitted from that tray of eggs per day, or, divided by twenty-four, to get it on the hourly basis, we have 55.8 British thermal units, which must be transmitted from that tray of eggs in one hour. Now, that must be transmitted by some of these methods, and the principal ones that we are discussing now are convection currents and radiation between the two. Now, I have taken a few eggs, three, in fact, and I have measured the surfaces, as close as
334 I could, to get the average surface area per egg, and I find in that case that the average egg of those three had a surface area of 7.163 square inches, or, on the average there are twenty eggs required to produce one square foot of surface area. I bring that to a square foot basis, because our coefficients are all on the square foot basis.

Now, if we have 134 eggs in a tray, and we divide that by twenty, then we have 6.7 square feet of total surface area per tray of eggs, and that is the area which must dissipate this heat which is generated during this seventeenth day that we are talking about.

Now, we are assuming that all of that surface is available for convection. Now, the surface that is available for radiation must be the projected area of these eggs upward or downward, in which, when the two eggs are touching each other, that part of the surface is not available for radiation in the strict sense of the word, because it is radiating to other surfaces of the same temperature.

Now, if these eggs are packed in a tray of 10½ by 33½ inches, which seems to be the average tray here, the total exposed projected area at the top is 2.44 square feet.

Now, of course, we have the same area at the bottom, or, we have a projected area of 4.88 square feet from that tray, which is available for radiation, providing that the tray is placed so that it can radiate the heat in an effective manner.

335 Now, if this tray, on the seventeenth day, is placed between trays numbered sixteen and eighteen, and that is the case that we are discussing now, because that is the condition of the Smith incubator,—if this tray is placed between eggs of the sixteenth and eighteenth day, in that case the radiation from those eggs will be practically nullified or eliminated, because there will be above and below eggs of very nearly the same temperature, and in order to radiate that heat effectively, those eggs must be exposed to colder surfaces; so the radiation in that condition is practically eliminated so far as the surrounding eggs are concerned, because they will receive heat from the hotter eggs on the eighteenth day, or the next day, as well as to give it to the other eggs which are slightly different; and, in this condition, all of the heat must be given off, then, by convection currents, without radiation.

With an amount of heat generated of 55.8 British thermal units per hour, with an area of 6.7 square feet for the total eggs, and the surface coefficient of one, we find that a temperature difference of 8.33 degrees will be required between the egg and the surrounding air; in order to get that heat out of the egg, we must have a temperature difference, or a temperature gradient, or a temperature difference, in order to have the heat flow from the egg.

336 A. (Continued) Now, supposing instead of placing your eggs on the 17th day between eggs of the same heat generating capacity, or the same temperature, supposing that tray of eggs is placed between two trays which are in the earlier stage of incubation, taking, for instance, three or four, or any place up to nine or ten days, those eggs are not radiating heat. They are receiving heat in the very early stages, and therefore, their surface temperatures are not above the air temperature; if those eggs are not generating heat, then their surface temperatures are below the air temperature and the heat will be radiated from these hot eggs and in that case you have the benefit of the radiant heat for two temperatures, particularly in the case of the later stage, that you will not have if you place those eggs in eggs of their own temperature or own stage of heating condition. Now, as I stated before, the radiation co-efficient in this case is approximately one or substantially the same as the convection co-efficient, but, for the purpose of this discussion, we are not allowing the full surface of the eggs or radiation. We are only allowing the projected area at the top and the bottom of the tray. The ratio of the projected area of those eggs,

to the total surface area is 4.88 divided by 7.16, or 68.2 per cent. That means if we had a condition in which the temperature difference between the surface of the egg and the surface of the egg next to it, was the same difference as
337 the temperature difference between the air and the egg, then that egg would radiate 68.2 per cent as much heat as it would convey by the convection current. Now, of course, so far as the percentage radiated, the percentage of heat between the two, that depends upon how the eggs are placed and what stage of incubation they are in, and what their arrangement is,—there are so many things, but it is very obvious that if the eggs are placed in an incubator so they start from the top, as they do in the Smith machine, and move downwardly as they progress, between eggs of substantially the same heat condition, or the same generating capacity, so any layers of eggs that are underneath will be hotter eggs, and those above will be just a little bit colder eggs, and therefore, there will be practically,—they will be in no position for taking advantage of that proportion of the heat which might be radiated from the eggs, and all of the heat in that case must be driven off by convection current. Now, if we take the other case, or take a condition in which the various stages are mixed up, and we put the cold eggs in with the warm eggs, as is the case with the Snow incubator, then only a part of that heat will have to be taken off by convection currents, and the remainder will be taken off by radiation, and in this condition the percentage taken off by radiation, or interchanged by radiation, will be very much greater than it is in the first case. We could work out many problems through that, but that demonstrates that radiant heat is a very important factor in the question of incu-
338 bation. As far as I have seen in any of the patents discussed here, I do not recollect that radiant heat has been talked about. I have read the Smith patent very carefully, and I cannot find anything in that about radiant heat. Smith has actually built his machine, and purposely placed those eggs of like temperatures in like elevation, and he has placed the hot eggs at the lower part of the incubator, where all of the heat is driven off, and he has specifically designed a machine which would carry air currents or air columns down and force those currents up through those eggs for the purpose of taking off this high temperature for this heat. He has not considered radiant heat in the arrangement of those eggs. He has not spoken of it. Snow's incubator takes that into consideration, and it is not a question of the eddy currents alone in there. It is a question of the placing of the

eggs and the function of the incubator and what are we trying to do? We are trying to regulate the temperature in the incubator and trying to regulate the temperature of the eggs and trying to transmit heat from egg to egg. Snow has a much more logical arrangement than Smith has to that, and everything in the Smith patent describes specifically the fact that he has laid out the machine,—a particular machine for hatching in a broad way to take the heat off in a particular method and circulating that air in a definite particular method. Snow has not done that. He has arranged his eggs in different layers.

339 Q. State whether Snow's arrangement and the method of circulating the air is such as would get a better advantage from the radiant heat on the eggs.

A. I don't know as I just understand that question.

Q. Perhaps I made a mistake. I will change the question: Which of the two machines have the best arrangement for getting the benefit of radiation from the eggs?

A. Snow's.

The Court: That is what he has been arguing on for the last half hour.

Mr. Williamson: I suppose so, but I want to get it definitely stated.

The Witness: Well, that is substantially all the argument I have to make. There may be a few points that I have missed, but those are the facts of the case. Radiant heat has not been recognized in those incubators and it has been an extremely important factor and it has not been recognized in many cases of heat transmission until recently.

Mr. Williamson: I did not hear that.

The Court: He said heat radiation had not been given enough consideration or enough emphasis by these incubator people.

The Witness: That is substantially what I wanted to bring out.

Q. Were you through?

A. I think so.

340 Q. Did you use any diagram or sheet that you wanted marked?

A. I have got some notes of my own.

Q. Didn't you have a heat unit, or is that already in?

A. That is already in evidence.

Q. That is the plaintiff's evidence?

A. Yes.

Q. Now, Professor Rowley, you testified that you heard Mr. Taggart testify in this case. Did you pay any particular attention to what he said about the tests,—his tests of the plaintiff's specimen of the Smith machine, and his test of the plaintiff's model of the Snow machine? Did you give any particular attention to that part of his testimony?

A. Well, I heard that part of his testimony and I have seen, of course, the tests, that he introduced, but I didn't get very clearly how he took all of that detail he had.

Q. That is not what I am asking you. I am asking you did you hear his testimony?

A. Yes.

Q. He introduced more or less detail sheets, and I don't remember what general term he called them by, to make clear the nature of the results of his tests. Have you considered those?

A. I have.

Q. Please state whether or not you agree or disagree
341 with Mr. Taggart's testimony regarding those subjects, and if you have any criticism to make of his tests or the reports of his tests, that were put into evidence, and the diagrams or drawings that he put in, do it in your own way, as briefly as you can, consistent with clearness.

A. I will have to see those diagrams.

Q. Take them up in regular order.

A. As I have it here, the diagrams or test data shown here, for the Smith incubator are marked Exhibit 7.

Q. Plaintiff's Exhibit 7.

A. Plaintiff's Exhibit 7.

Mr. Williamson: Do you refer to this diagram?

The Witness: Yes, that is it. Now, in examining the test data, as shown on these diagrams, there are some points that are difficult,—

Q. You better give the diagrams by the exhibit numbers.

A. Taggart's diagram, Exhibit number 7, showing the Smith incubator. There are points on here that are difficult for me to analyze. I have not been quite clear as to just what the object of these tests were,—just what it was intended to represent by this data, that have been shown upon these various diagrams. Now, referring to the first page of Exhibit number 7, which is marked, "Sectional view across machine through fan," this would seem to indicate that those were the directions and velocities of the air through that sec-

tion of the incubator. Now, to begin with, I don't
342 know just how Mr. Taggart measured those velocities, but I understood he used an average ordinary anemometer, and I understood he had made those tests without disturbing the curtains or anything, with the curtains in place, and yet, I find velocities in here in the egg chambers throughout this view and also throughout the view, Exhibit B, which seem to be a section through the trays midway from front to rear. I find the velocity through there. If these were taken with the curtains in place, I don't see just how, by an ordinary anemometer, those readings or those points, without raising the curtains, or disturbing it in some way, or some method used not indicated in the test, could be made. For a scientific test, that ought to be determined and it should not be left for imagination.

Mr. Ely: Did you see the windows in the machine?

Mr. Williamson: Now just a minute.

The Witness: I saw the window in the machine.

The Court: He refers to those windows which you use in looking through the anemometer.

The Witness: Your Honor, I understood that was shown there for just one place, and these readings were taken all along both sides. I only saw a window in one place in this test.

The Court: I don't know whether the testimony shows the windows all over it or not.

Mr. Williamson: It only had one window.

343 The Witness: I of course, have to determine only what I could get. If I am wrong, I would like to know the facts. I am trying to analyze these things on a fair basis.

Q. He only had one window.

A. And furthermore, if I were to interpret the drawings, Exhibit Number 7, in the corridor I find velocities there which are indicated at the top 1140 near the fan, and immediately below that 950, and then at the center of the right is 600, and at the lower left is 500. That is for the cross-section or the distance from side to side of the corridor. Now, that corridor is approximately the same width, or fully as wide as the space is between the two fans. In interpreting this drawing, I would feel justified in thinking that that represented the average downward velocity in the corridor, or I would es-

timate in that case, without further data, that the downward velocity, as Mr. Taggart has found it, was approximately 600 feet per minute, through the cross-section of the corridor.

Q. You mean that is what he represents?

A. That is what this drawing represents. Now, I turn to the drawing, Exhibit 7-A, the last of the set, and now I find here a longitudinal section through the corridor in which there are many arrows downwardly, but I do not see anything to reinforce my opinion either way as to what the velocity in that corridor there—there are no figures
344 given here, and yet, here is a place where it would be very easy to take some figures or take some readings and show the downward velocity in this corridor, and yet I see no figures in that corridor and, therefore, I am compelled, as an engineer analyzing these plans, to assume that the corridor downward velocity is about at least, I would say, through the central section, at least 600 feet per minute. Now, taking the sides, that air which comes down through the corridor, if it is all downward as shown in this cross-section through there, it would have to come up under those trays. It would have to come up on the side unless there were some other velocities upward, which are not shown here. Now, taking the side section, or the section of the trays at the side, through the same center line,—

The Court: You mean here? (indicating).

The Witness: No, pardon me,—I mean right through here along this line, (indicating). I am trying to get an average line through the center of the machine because all the air going down through that corridor must come back and up through these trays. Now, taking the right hand side on approximately the same line, I find that the average figures show 75 feet per minute,—that is the anemometer reading.

The Court: Where do you get that?

The Witness: By averaging all these up.

The Court: On this line?

345 The Witness: Yes, I took the average right through there and that is the average of all this data. Now, on the left hand side, likewise I find that the average is 85 feet per minute. There were no trays in there, and that was free space, which it is not, of course, but, if it was free space in there, with those velocities, then the average velocity of the two sides would be approximately 80 feet per

minute, and since there is approximately twice the area, if we consider it free area, then the total equivalent velocity for an equal area to the corridor would be about 160 feet per minute. Now, that does not check the air coming down,—even considering the free space, the air coming down seems to show something like 600 feet per minute. The air over the equivalent area going up seems to indicate about 160 feet per minute. Now, if we turn further in this set of drawings, to the drawing, Exhibit 7-B, which is a vertical section through the center line of the trays, and these velocities which I have been considering on the two sides, are indicated as velocities between the line of the trays, and Mr. Taggart has told us, I believe, in his testimony, or at least I understood him to say that the velocities between these lines of trays are greater than the velocity up through the trays, and, therefore, in allowing 75 feet per minute as the velocity on the right hand side, and 85 feet on the left hand side, and even calling that all free area, which is extremely liberal, and yet, I find it does not check. Now, the question is, that
346 these do not mean anything. I do not see, if this is an engineering report, how we can analyze this and get anything out of it, as to what it means. What are these arrows for, and what are those figures for? Do they mean what they show, or don't they show what they think they show? I don't know. At any rate, I cannot analyze it. Now, that only applies to this Smith incubator. As I turn to the next set of drawings,—

Q. While you are on the arrows,—you have just made reference to the arrows on Mr. Taggart's diagram?

A. Yes.

Q. I would like to ask you whether you find any justification for the arrows being placed like they are.

A. No, I cannot find any in this drawing, because if they mean what they indicate, it would surely indicate that the velocities downward through that central corridor is 600 feet, anyway, per minute, and it does not correspond. If they mean something else, then I cannot interpret it from this drawing. It is a very difficult thing and almost impossible to show a vertical section or a plane and a sectional view of an air column, which is nothing more or less turbulent there in their arrows, which indicate the direction of it,—the predominating direction of the velocity. It doesn't show anything about it. You are trying to show three dimensions in one plane. You are trying to show the motion

or velocity in three dimensions in one plane and you
347 cannot do it, and this shows it. Now, that same thing is brought out, it seems to me, very forcibly, in this next set of drawings.

Mr. Ralph Williamson: Those are Plaintiff's Exhibits 12 and 12-A and 12-B and so forth?

The Witness: I will refer, then, to Plaintiff's Exhibit 12, and so forth. I don't know the numerals.

The Court: They are on here, starting in with 12 and so on down.

Mr. Ralph Williamson: Exhibit 12-K is the last one.

The Witness: Now, as I look at this set of drawings, it seems to me that there has been an elaborate amount of work put on their preparation. No man could prepare an engineering report of this kind and show the data shown here, and show it correctly without an elaborate amount of work. There seems to have been a definite impression or a definite attempt to create an impression of certain air currents, or the directions. Now, I haven't gone into this to define or to show whether the in and out currents, as shown, are proper, because it would be practically impossible. There are no specific channels through which the air must pass, as there is in the Snow machine, and, therefore, it is not possible,—as there is in the Smith machine, I should say, and, therefore, it is not possible to make that kind of an analysis, but, looking at this first drawing, for instance, it would appear to me, if these arrows mean what they show in
348 engineering language, that there are no definite currents established in certain planes.

Q. Indicated there, is that what you mean?

The Court: Indicated by the arrows.

The Witness: Yes. Now, of course, in this the easiest place to take a few anemometer readings if you are going to take anemometer readings,—I don't know whether I have explained it, but if you take an anemometer and take it in a turbulent air current you get component force or the component velocity in the plane of the anemometer, but you do not get the other angle to it. In other words, the anemometer may rotate and show the upward movement of a mass of air, but it does not show the current or the direction of the current in that area only in that component direction, as shown by the anemometer, and, therefore, to begin with, I do not accept an anemometer as a proper means of measur-

ing currents unless you should have an elaborate mind, an unbelievable mind respecting these eddy currents, and you should take an unbelievable number of records. It is not scientifically correct, but the data must be presented here for scientific reasons. In looking at that drawing, the corridor, which would be the easiest place to get velocity, and by using an anemometer, it doesn't have a single velocity shown. It has plenty of arrows, but the velocities are not in there. In the other places, where it seems to be it is the intent to establish the air current, there are plenty of velocities
349 and arrows. Now, I want to refer next,—I cannot analyze all these points because it is impossible. I would like to refer next to the drawing 12-AA. On that drawing I find velocities shown along the back walls, next to the agitators. I find those velocities there,—Mr. Taggart stated he opened up the trays to get those velocities. I understood he opened up the trays to hold the anemometer in there. If that is the case, when you push those trays apart for a man to get in there, the size of Mr. Taggart, you have certainly disturbed these air currents, and what you get by the anemometer means nothing. Now, I would like to point out one or two cases in here where even by separating those trays apart I do not see how readings could be taken. For instance, take the readings directly below the left hand agitator, which is at the back of the incubator in the plane of the agitator, now to take that reading, the anemometer must be placed so that the plane of the anemometer wheel is perpendicular to the back walls. If you push that anemometer back in there in that position as shown here, you cannot read it, unless you fix up some special device for reading it. You cannot read it by any anemometer I have seen exhibited in this test, and, furthermore, if you try to spread those trays and go back there is a screen or net on top,—if you spread those trays to go back, the only way you can put that anemometer in there, as I can see, is to reach over the back down past that moving blade. I do
350 not see how that is taken by any data which is shown here.

The Court: You would have to reach around it?

The Witness: Reach around over the screen and back over the blade in there, unless there is some special device not indicated here or not exhibited. I do not see anything there by which you could do it. There is a line of readings along there that I might dwell upon, but I do not care to do that, and I don't think it is necessary. I want to take just a minute on drawing Exhibit 12-BB. Now, BB, it states here

that it is a sectional view in a plane parallel to fan and approximately six inches in front of fan. On the left side below on that drawing are several marks indicating circles and figures, and in those figures are either plus, minus or plus and minus, which state, as I understand it, that that is the position,—that it represents the position in which the anemometer was placed in the plane, at which the data were taken. The plus indicates air flowing to the fan, and the minus in the circle indicates air flowing away from the fan. The plus and minus indicates that the anemometer does not run steadily in one direction, and then over at the upper right hand side there is another arrow with the figure 100 over it, as an illustration, I believe, which states that the arrows show cross current to an anemometer. The number gives their approximate speed. Now, from those legends, or from

351 those notes, I would interpret that if there were cross currents to the anemometer, it would be so indicated by one of these arrows, and, in fact, there are several places near the bottom of the drawing, or the diagram, in which such arrows are indicated, showing cross currents. Now, from this diagram, I find all through the central portion of this section that there are no cross currents. Either the air must be moved in or it must be moved out, because there should be cross arrows there if it doesn't. In other words, this diagram tells us that all of the air in the plane, which is near the blades of the fan, is either moving directly in or directly out, or directly in and out. There are no cross currents that I can find there, or, if there are, they are very minute. In other words, he would have us believe that this is a diagram which represents air currents and those air currents are directly in or directly out in that plane, excepting at the bottom, and at the top there are a few which show otherwise.

Q. Is that right or wrong?

A. If we take Section BB, on sheet 12, the only point where we have an indication, where the arrows are shown, there—are shown in that section going upwards and downwards in various directions, and, therefore, they could not be directly in or out in that plane, and all of the tests which I have tried to show back in there they do not go in or out at that plane.

Q. You mean you haven't found them in or out?

352 A. I haven't found them in or out. I found them mixed, and I found them predominating in around the blades, but not in or out. If this diagram so stated that it is an indication of what Mr. Taggart thinks, I might accept it, but if this diagram tells us as close as Mr. Taggart is able

to tell us what is going on in the air currents in that incubator, I cannot accept it. Now, I might go through diagrams CC and DD, and add the same criticism. As I look at diagram DD, it shows the same thing; that is a diagram taken along the line DD, or in the plane very close to the outer end of the trays. Now, as I would interpret that diagram, those air velocities all over the trays are either in, directly out, or in and out, and there are no forward or up and down movements, as I found in my test. I think it is necessary to bring this out because our test data do not agree, and it is going to be necessary in analyzing that to settle on either one or the other.

These test data are entirely different records.

Q. Go through them and point them all out where they are wrong; that is, in a general way. I do not mean to go into detail with every sheet, but, just generalize.

The Court: I think he should state generally upon that. If he will take these sheets it will take us too long.

Q. Generalize it.

A. Those same criticisms and many others that I have not pointed out on different sheets, are here. There
353 are very few places where I can find in these data sheets where actually claimed arrows or intersections are crossing on the line. At these places, we have a line, and if the direction of the air in one plane is along that line, then, obviously, it must be along that same line in the other plane which intersects it. It could not be otherwise. Now, the only, or the one place in that that I have noted here, and on diagram 12 we have the arrows representing, I suppose, in that plane the direction of the air-flow in that plane. On diagram EE, we have another plane intersecting this plane, which also shows arrows. On this diagram 12 we find a specific point which is just at the right of the air exit, and I have lettered it on my drawing as "A". That shows a definite current of air, a straight line, of 580 feet from right to left. Now, if I take this same point and plat it on plane EE, which goes perpendicularly to this, I find that it meets the same place at a point where there is a downward eddy shown, instead of a horizontal line, or, in other words, this is the line here, and that line on this drawing shows this air current, which is moving from the lower to the upper part of the diagram. On the other diagram, it is moving from right to left. That same point on diagram EE does not agree. If this diagram, then, were correctly drawn, this

diagram EE, it should correspond at that particular point with the point on 12.

Q. In diagram 12?

A. On diagram 12. Now, we cannot obviously
354 analyze all these data, because we would never get through.

Q. You mean the data relating to the Snow machine, or both machines?

A. I have already analyzed that on the Smith. I am now on the Snow machine data, as given by Mr. Taggart. Now, I want to refer to the drawing FF.

Q. That is, Plaintiff's Exhibit FF?

A. Plaintiff's Exhibit 12-FF. Now, in this drawing I find it is a section in a horizontal plane, and, therefore, when arrows are positively drawn it would seem that they indicate that the flow of the air is in that horizontal plane, and since this represents a plane between the trays, it would indicate that the flow is parallel between those trays. In fact, there is a note on this drawing, next to the last, on the right hand side, which says, "Arrows in trays show general direction proximating the speed of the air currents passing through columns." I would say from that, an arrow in that tray should show the approximate direction of that air. Then there is another note at the top, which says, at the top left: "Circle in trays in position of reading of the anemometer when placed flat on bottom of tray." The next note, which has a circle with a plus in it, has a headline, "Plus readings indicate air moving downward through bottom of trays." The next note says, with a minus sign, that the minus means arrows moving upward. I would like to take one point here,
of which there are many, as an illustration, and that is
355 in the tray farthest to the left there is an arrow in the center of that tray forward and horizontally, which has on that arrow "320." Now, that would indicate that the air velocity or the air-flow in that tray is in substantially a horizontal direction because it is a horizontal plane and moves forward at 320. That is the impression which would be given. Right beside that, however, there is a circle with a plus in it, which says, "350." That circle would indicate, from the figure there, that the air is moving upward at 350. Certainly, that arrow cannot be relied upon to show the direction and the flow of that air. If that is flowing in a horizontal direction, it is 320. How can it be flowing in that direction, or a direction perpendicularly to the trays at 350? In other words, these drawings have shown large numbers of arrows. As you look at this throughout, there are arrows in here, plane after plane horizontally. There are plane after plane

throughout the fan or the agitator, and these are filled with arrows, so the directions evidently intend to show or prove that that air is moving directly towards those fans, and yet we find some other arrows here merely put in, perhaps, but they are there, where they might indicate that it is moving up and down.

Q. Are those arrows to be relied upon in that case?

A. I don't see how you can rely upon the arrows. I do not see how it is possible to rely upon the arrows which are giving such information and apparently such erroneous
356 information. It is an impossibility to draw from these plans an accurate or anything like an accurate opinion of what is going on, or what I have found to be going on in my tests in those machines. Now, if we continue, and I want to make this brief,—if we continue we find the same drawings or the same diagrams in Exhibit,—

Q. Not the same,—you are taking up another set, aren't you? A. No.

Mr. Ralph Williamson: Exhibit 13.

The Witness: We find the same data there shown in colored drawings.

Q. The same representations?

A. The same representations shown in colored drawings. Those colors are put in there to reinforce the idea apparently that the air moves in and out, and in certain definite channels. It has the same note on there, stating that the arrows show the general direction, and these data were taken from the former sheets, so far as I know, but I do not see anything in here in regard to the colors, but I believe it was explained in Mr. Taggart's testimony.

Q. This model?

A. The color in the very elaborate diagram, or in the elaborate model, wherein the red shows it flowing in, and the blue shows the air flowing out.

Q. You mean Plaintiff's Exhibit 14?

357 A. I mean Plaintiff's Exhibit 14.

Q. You mean that little model?

A. I mean the little model over here. I understood on this model, Exhibit 14, it was intended to show the facts as he had found from the flow of this air in and out, and I expect that was taken from this data that was shown on the diagram.

Q. Go through those sheets, as fast as you can.

A. These are a duplication, so far as I know, of the data shown in the sheets which I have covered, and the point that I want to make is that I cannot analyze these and get an ac-

curate record or anything like an accurate idea of what is going on.

Q. Could anybody else do it, do you think?

Mr. Ely: I object to that as improper.

Q. Any engineer,—a mechanical engineer? I will withdraw that.

The Witness: Now, of course, such a set of drawings might be shown, prepared so elaborately by some commercial artist if he wanted to put across to the public this matter, but for an engineer to prepare a drawing like this, I cannot see how they can represent what ought to be represented or what I found in the tests which I made on similar machines. I cannot analyze this data and get out of it what these drawings would offer to represent to the inexperienced man. I do not think there is any use of my going into more detail.

358 Q. You think you should not go into them separately?
A. No.

Mr. Williamson: Could we have a two or three minute recess?

The Court: Yes.

(Recess.)

359 Q. Professor Rowley, did you pay close attention to Mr. Taggart's testimony about the structure and operation of the Snow machine as it was exemplified in the plaintiff's model, so-called model of the Snow machine in evidence on behalf of the plaintiff and as it was based on the machine which he had seen at Sleepy Eye at the time that you made the test you referred to? Did you pay close attention to that testimony? A. To the testimony? Yes.

Q. What is that? A. Yes.

Q. Did Mr. Taggart give a correct description of the structure and operation of that Snow machine as you understand it? A. No.

Q. Did he correctly describe either one of them according to your understanding? I mean the air circulation in either one of them according to your judgment? A. No.

Q. Please state what the word "current" means as that word is used in the mechanic arts by mechanical engineers and others.

Mr. Ely: Oh, I object to that, Your Honor. We are going far afield.

Mr. Williamson: Well, I want him to state what it means. It won't take but a minute.

The Court: He can state what he means by currents.
360 I thought I understood it but maybe I don't.

A. My understanding of current is a continuous flow in one direction or a continuous movement in one direction.

Mr. Williamson: Now, the defendant offers in evidence a certified copy of the file wrapper record of the Smith patent in suit, number 1,262,860 of April 16, 1918, and requests that it be marked as Defendant's Exhibit O, and with the words "File wrapper record of the Smith patent in suit."

The Court: It will be received. That is the file wrapper of Smith?

Mr. Ely: Yes. May I interrupt just a minute. We have a photostatic lithographic copy of that, Your Honor, and I would just like to hand it up to you. We will give Mr. Williamson another one which we have had made and which I think is easier to read.

The Court: It would certainly be easier to examine and you can look at them and see if there is any difference.

Mr. Williamson: Sure, all right.

The Court: You marked that Exhibit then?

Mr. Ely: That is much easier to read than this blue and white, I assure you it is correct.

Mr. Williamson: I am going to offer this but I am perfectly willing to put that in too.

The Court: All right. Received. If there is any dif-
361 ference why you can point it out.

Mr. Williamson: I want this one in.

The Court: I understand. I will admit that one in, but we will use this one.

Mr. Williamson: That will be all right, Your Honor.

The Court: Which patent is that?

Mr. Williamson: The patent in suit.

The Court: Well there is only one patent here.

Mr. Williamson: You better take the number of it. It is 1,262,860.

The Court: That is given in the complaint.

Mr. Williamson: Yes, on April 16, 1918. That is the Smith patent.

Q. Professor Rowley, have you read and do you understand that file wrapper record which I have just offered in evidence of the Smith patent in suit? A. I have.

Mr. Ely: Object to that, Your Honor, I don't see how that is material.

Mr. Williamson: That is customary and it is material.

The Court: Overruled.

Q. Have you read and do you understand all the prior patents which were referred to on that file wrapper record and cited as references against claims presented in the
362 Smith application? A. Yes.

Q. Have you also read and do you understand the additional patents set-up in the answer in this suit and stated to be relied upon by the defendant in this case?

A. I have read all of those that—I haven't checked the numbers, but I have read them all.

Q. Do you understand them? A. Yes, sir.

Mr. Williamson: I have here, Your Honor, a portfolio which contains copies of all the United States Patents that were cited as references on the file wrapper record and also a certified copy of the German patent that was cited on the—there is a German patent that was cited on the file wrapper record and which also contains the additional patents set up in the answer and also stated, in response to the order to show cause, upon which we would rely, upon which the defendant would rely, and I offer the said portfolio and all of the said patents with the understanding that the reporter will separately mark those patents with the name and number of each patent, so that if they should happen to get dislocated from this portfolio they could be found, otherwise I have got to offer them one at a time.

The Court: Those would be marked different exhibits?

Mr. Williamson: I would like to have the portfolio
363 marked "Portfolio containing patents relied upon by the defendant."

The Court: And mark the Exhibit P. Received.

Mr. Williamson: And marked Exhibit P, yes, but for fear these would become detached I would like them each marked

Defendant's Exhibit, and the number of the patent, otherwise they might become lost or confused.

(Defendant's Exhibit P, "Portfolio containing patents relied upon by the defendant," marked for identification by the reporter.

German Stulik Patent, 155,917, November 7, 1901.)

Patents cited in file wrapper record.

Winkler, 286,756, Oct. 16, 1883.
Bassini, et al., 330,457, Nov. 17, 1885.
Campbell, 344,474, June 29, 1886.
Morgan, 591,870, Oct. 19, 1897.
Bell, 691,837, Jan. 28, 1902.
Scott, 709,650, Sept. 23, 1901.
Perkins, 745,458, Dec. 1, 1903.
Boyd, 828,181, Aug. 7, 1906.
Koons, 916,454, May 30, 1909.
Goldstein, 1,137,752, May 4, 1915.
VanKeuren, 1,160,793, Nov. 16, 1915.
Endemann, 120,253, Oct. 24, 1871.
Jones, et al., 152,644, June 30, 1874.
Morgan, 272,744, Feb. 20, 1883.
Conant, 297,676, April 29, 1884.
Christianson, 559,676, May 5, 1896.
Verna, 891,019, June 16, 1908.
Klinke, 949,653, Feb. 15, 1910.
Olson, 1,100,146, June 16, 1914.

Patents set up in answer not cited in file wrapper record.

Guerin, 3,019, Mar. 30, 1843.
Johnson, 360,223, March 29, 1887.
Proctor, et al., 426,321, April 22, 1890.
Proctor, 553,723, Jan. 28, 1896.
Peters, et al., 843,909, Feb. 12, 1907.
Wiebe, 992,622, May 16, 1911.
Schmidt, et al., 1,010,809, Dec. 5, 1911.
Zimmer, 1,075,747, Oct. 14, 1913.)

Mr. Williamson: Now, I have here, Your Honor, a book entitled "Ure's Dictionary of Arts, Manufactures and Mines" which was published, as you will see, by Long-
364 mans, Green, and Co., England, London, 1867, and I call your attention to what appears on pages 652 and 653 of that book.

The Court: What is the title of that book?

Mr. Williamson: "Ure's Dictionary of Arts, Manufactures and Mines, Volume II," pages 652, 653. Now, we have a stipulation that photostats of publications can be introduced and we have had a photostat,—and to the particular article there appearing entitled "Incubation, Artificial," and we have had photostats of that article taken, and we have a stipulation that photostats may be introduced.

The Court: Incubation, what is that?

Mr. Williamson: "Incubation, Artificial," and as I say we have a photostat which is enlarged, from that same article which you can more easily follow. You can read that much more easily and with your permission I will read part of this and point out the structure that is shown in the cut on page 653. "The Egyptians have from time immemorial been accustomed to hatch eggs by artificial warmth, without the aid of hens, in peculiar stoves, called Mammals."

Mr. Ely: Pardon me, just a moment. This is going in. I don't see any reason for just sitting back and listening to Mr. Williamson read this.

Mr. Williamson: Your Honor, this is very important, and this is my testimony.

The Court: I take it he wants it in the record.

365 Mr. Williamson: Yes, and I want to show you this structure. It is very important. "M. de Reaumur published in France, about a century ago, some ingenious observations up on this subject; but M. Bonnemain was the first person who studied with due attention all the circumstances of artificial incubation, and mounted the process successfully upon the commercial scale. So far back as 1777 he communicated to the Academy of Sciences an interesting fact, which he had noticed, upon the mechanism employed by chicks to break their shells; and for some time prior to the French revolution he furnished the Parisian market with excellent poultry at a period of the year when the farmers had ceased to supply it. His establishment was ruined at that disastrous era, and no other has ever since been constructed or conducted with similar care. His apparatus derives peculiar interest from the fact that it was founded upon the principle of the circulation of hot water, by the intestine motions of its particles, in a returning series of connected pipes; a subject afterwards illustrated in the experimental researches of Count Rumford. It has of late years been introduced as a novelty into this country, and applied

to warm the apartments of many public and private buildings. The following details will prove that the theory and practice of hot water circulation were as perfectly understood by M. Bonnemain fifty years ago, as they are at the present day. They were then publicly exhibited at his residence in Paris, and were afterwards communicated to the world
366 at large in the interesting article of the Encyclopedie Technologique, entitled 'Incubation Artificielle,' under the head of Regulateur de Temperature."

Mr. Williamson: Then he goes into a detailed description of his apparatus and instead of reading that to you, Your Honor, I will point it out, the details. Over here is the cut. There are a series of trays superimposed one upon the other. Then out towards the left there is an extension from the lowermost part of the incubator proper, which he calls a nursery. Then he has over at the right end, a little beyond the right end of his main incubator, he has got what he calls a boiler with pipes extending above and below each of the trays in which he puts his eggs.

Mr. Ely: Pardon me.

Mr. Williamson: That is just what it is.

Mr. Ely: I know, but is Mr. Williamson subject to cross-examination, Your Honor?

Mr. Williamson: I will make myself subject to cross-examination on this if you want me to do it.

The Court: Of course he is reading this.

Mr. Williamson: It would tire the Judge out for me to read all of this detail to him.

Mr. Ely: That is what I want you to use.

The Court: Of course, it isn't received as evidence. It is part of his argument.

367 Mr. Williamson: My statement. Now, that is about the structure, but that is the way he describes it, and I could verify it by the detailed description. But I didn't finish. Now these hot water pipes, as I told you, run above and between the trays and out through the nursery and come back again to the boiler and are kept in a continuous circulation so as to keep that temperature in the incubator at the proper degree of heat which he states to be a hundred degrees down here and they heat that boiler, the fire in that boiler is controlled by a thermostat so that that heat is maintained

constantly at this desired degree of one hundred degrees. Now I want to read—that is the structure. Now I want to read what he says about the way he handles it.

"When we wish to hatch eggs with this apparatus, the fire is to be kindled in the boiler, and as soon as the temperature has risen to about 100 degrees F., the eggs are introduced; but only one-twentieth of the whole number intended, upon the first day; next day a like number is laid upon the trays, and thus in succession for twenty days, so that upon the twenty-first day the eggs first placed may be hatched for the most part, and we may obtain daily afterwards an equal number of chicks. In this way regularity of care is established in the rearing of them." It is staged incubation.

"During the first days of incubation, natural as well as artificial, a small portion of the water contained in
368 the egg evaporates by the heat, through the shell, and is replaced by a like quantity of air, which is afterwards useful for the respiration of the animal. If the warm atmosphere surrounding the eggs were very dry, such a portion of the aqueous part of the eggs would evaporate through the pores of the shells as would endanger the future life of the chick in ovo. The transpiration from the body of the hen, as she sits upon her eggs, counteracts this dessication in general; yet in very dry weather many hatching eggs fail from that cause, unless they be placed in moist decomposing straw. The water saucers N N are therefore essential to success in artificial incubation.

"After the chickens are hatched they are transferred into the nursery, O Q, on the front side of which there is a small grated trough filled with millet seed. Small divisions are made between the broods of successive days, to enable the superintendent to vary their feeding to their age."

"In order to supply"—well, he goes on then and states how valuable that is.

Now, that is the structure, and the book states that this was in commercial use in 1777, but the book itself was published in 1867 and we have the benefit of the date 1867 as the disclosure of that structure which shows staged incubation and temperature control and moisture supply, all as in use in modern incubation, way back there.

369 Mr. Williamson: Defendant offers in evidence the photostat of the two pages of Ure's Dictionary of Arts,

Manufactures and Mines published in London, England, by Longmans, Green, and Co., 1867, one photostat being of the title page of that book, and the other photostat being of pages 652 and 653, volume II of that publication.

The Court: That may be received.

(Defendant's Exhibit Q marked for identification by the reporter.)

(Adjournment taken until November 22, 1932, at 10 o'clock A. M.)

---

370 November 22, 1932,
At 10 o'clock a. m.

Hearing resumed pursuant to adjournment.

Court and counsel present.

Mr. Williamson: May it please Your Honor, before we proceed with the witness, on reading the transcript of yesterday's testimony, at the time that I offered this portfolio of patents, I thought that I had also, when speaking of the German Patent to Stulik, Number 155,917, of November 7, 1901, I thought that I had also said: "And a certified English translation of the German in that patent," but on looking at the transcript, it looks as if I had overlooked that, and I would like to have that inserted in the offer, and I will offer that now.

The Court: Very well, it will be received.

Mr. Williamson: The certified translation is bound in the volume.

The Court: Very well.

Mr. Williamson: Now, there is one more thing: On looking through the portfolio which was offered, I find that one of the United States Patents set up in the answer, and also cited as being one of the number that will be relied upon in my response to the Court's Order, to-wit, the patent to Renwick, 193,616, of July 31, 1877 by some oversight, it was not bound into the portfolio, and I ask permission to have it bound in?

371 The Court: That may be done.

Mr. Williamson: Thank you, very much.

The Court: Gentlemen, I wish to make inquiry of you: Do you contemplate that this case will be finished tomorrow?

Mr. Williamson: I am unable to state; it depends altogether upon what the other side will put in rebuttal. I will try to expedite our side of the case as fast as I can.

The Court: Well, day after tomorrow is Thanksgiving Day, and we will not hold court on that day; I will declare a recess for that day, and I just wanted to know.

Mr. Williamson: I will try to expedite it just as fast as I can.

The Court: Well, if necessary, I will hold a little longer hours, so as to get through, and I won't do that unless it is necessary.

Prof. Frank B. Rowley, recalled, testified as follows:

Direct Examination.

By Mr. Williamson:

The Witness: Now, Your Honor, I would like,—before I go ahead, I would like to refer back to our discussion which is recorded in the final record on page 306, as to what would happen in the Smith incubator without the curtains. You asked that question, I believe, and I defined it. Sunday, I went down to the incubator that we have and actually
372 took the curtains off, and tried out the test; that is, I did not make a complete test, but I tried the circulation, to see where it would go, and determined at the left side of the corridor,—that is, the air in on the left side at the bottom, and also the circulation on both sides.

Now, this is what I find: The circulation, or rather, the flow of air inward from the corridor toward the wall, on the left side of the bottom, where I placed those anemometers, was somewhat lower.

Now, I took anemometer readings all along these twelve same places which I said I had taken before, and I found the average in-flow rate in feet per minute to be 162, and, as I had it there now, I find that that was 198; so there was less air actually flowing under.

Now, as to the circulation, the air passed down from the fan, which we have described, in a cone, and it passed down to the floor, nearly to the floor. At the lower side there, of course, you cannot tell, because it was mushrooming out, and it passed in under the tray, from the bottom, up about eighteen inches to two feet, or thereabouts; I could not tell the exact place. From there above, it was passing out the other way.

By the Court:

Q. What do you mean, it passed out the other way,—passing out in the corridor?

A. Into the corridor, yes.

Q. You mean, it made a circuit down under there,
373 striking the floor, and came in about two feet up?

A. Probably about two feet up, and came up,—it would pass into the trays for a space of approximately two feet; I did not determine that exactly; and then it went up through the trays.

Q. You mean, it would not go clear across there; you say it passed into the trays about that much?

A. Well, I don't know, Your Honor; I think some of it would go way back.

By the Court:

Q. That is what you meant?

A. No, I did not mean that; I mean that some volume *would not go in under there; I expect some of it would go* clear back to the wall. From this point, it is approximately two feet (indicating); that is, to the middle of the corridor; the air would be passing out from those trays into the corridor, and a large part of that air would actually not go up and over in through the fan, in its normal direction, but it would come over underneath the panel holding the fan, and come out of the tray, in the under side of the fan, and be brought down again, to the action of the fan.

Q. Did some get clear over?

A. Some on the outside would get clear over, and go both ways, that is, some would go to the outside, and over the top.

Q. So, according to your testimony, as I understand it, the air was passing in and down in a cone shape, and as it struck the floor, or near the floor, it mushroomed down under the trays?

374 A. Yes, and came up,—some of it came up all along on both sides.

Q. And some came clear over?

A. I did not go back there to test it, but there undoubtedly must have been some back there; I did not make a test of that kind, but a large part of it came out into the corridor, instead of going the other way, that is, it did not flow up through the trays.

Q. A large part of it?

A. A large part of it.

Q. And what do you mean by a large part of it?

A. I put a smoke apparatus,—I injected smoke under the trays about,—oh, I should say a foot, or a little over, over the floor, about the middle line of the trays, and the smoke from that stream would come up and get out into the corridor under the fan.

Q. Well, wouldn't the smoke also come out when you put it up higher?

A. Yes, it would come out even up higher, too.

Q. Well, that showed that the smoke was coming out all along into the corridor?

A. Into the corridor, just above that certain line. Now, below a certain line, it would be going from the corridor into the trays, and above that line it was coming out. That is what I wanted to make clear.

By Mr. Williamson:

375 Q. Was there any short circuiting of the air that came from the fan directly, in going to the trays, before you put it down at the bottom? Do you know what I mean by short circuit?

A. Well, you cannot tell definitely what is happening there, because there is quite a space, and there is a churning of the air as it goes down and turns up in the space above, and a short circuiting depends upon the speed of the air, and how far away the floor is from the trays, of course. Of course, in this case, the short circuiting, so to say, would be down,—about two feet from the floor.

Q. How much of that short circuiting was there above the middle of the corridor,—the middle of the vertical height of the corridor?

A. Well, it depends on there what you mean by short circuiting.

The Court: Well, he means, to come together.

By Williamson:

Q. If Your Honor please, I mean, turning back,—turning into the trays, and coming back from under the panel which holds the fan, or over to the fan, without coming down to the bottom; that is what I mean by a short circuit.

A. The air above the center line was coming out into the corridor.

By the Court:

Q. According to your testimony, it was driven down in a cone shape, and struck the floor, or near the floor, and curved up in through the trays?

A. Yes, some of it.

376 Q. It could not do anything else if it were driven down there?

A. No; some of it goes in, and it comes out above the line; it merely comes down to the floor, and, of course, whenever it gets to the floor, if it is driven hard enough to hit the floor, it is going to mushroom out. And the action is that that air is going to pass out, or balloon out, and it is going to circulate in cycles, and to the fan. Now, those currents, if the curtains were on, would pass up through the tray, above the fan, and downward through the fan.

Q. Well, that has been testified to here before.

A. In this case, they pass both ways. Some of the upper ones would pass up that way (indicating), and some of the inner ones would pass up under the fan, never getting up to the fan at all. That is the difference that I found between the curtains on, and without the curtains on.

Now, I tested the fan speed. The one fan at the end that had the screen removed, I found that to be 1678 RPM; and I tested the air velocity, and the average air velocity over the outlet of the fan, I found that to be 1200 feet per minute, as it left the average area of the fan. I just wanted to make that clear, Your Honor, because I made that test, and I thought you should know it.

Another point, before I go on, is,—we were testifying yesterday, on the question of wall temperatures in the two incubators.

377 By Mr. Williamson:

Q. Before you go on with that, you made these tests on Sunday, with the Snow specimen, and on the Smith commercial machine, did you? A. Yes, sir.

Q. Now, yesterday we were discussing the question of surface temperatures. Now, this morning, I have hurriedly made some calculations here to show the difference in the temperature between the surface temperatures, between conditions as shown in the Snow machine, and conditions as shown in the Smith machine, by Mr. Taggart's affidavit; that is, I have not myself determined the air velocities from these surfaces with the anemometer. However, they are introduced here, and, taking those velocities, and taking a wall which is built up of two layers of wood, and two layers of half inch insulation, as the wall of the incubator,—I had to make some part of the problem; that, of course, might be any kind of a wall,—I find that with a 100 degree on the inside, and a 65 degree air on the outside, the Smith machine would give, for the conditions shown in these velocities, 90.5 degrees as

the surface temperature of the wall, and the Snow machine would give 92.7 degrees, or, in other words, there would be a difference of 2.2 degrees. That is the difference that I was talking about the other day.

Now, if these walls were built with better insulation, then, of course, they both would have higher temperatures on the wall. It is a question of insulation, and of the relative value thereof, and of the relative velocity. I just wanted to make that clear.

378 Q. You did not have any new sheets there, did you?
A. Why, these are my calculations.

The Court: He stated his conclusions on that.

The Witness: I don't think that I went into that.

By Mr. Williamson:
Q. All right, Now, Professor,—

Mr. Williamson: I have here, if Your Honor please, another reference, of which you can take judicial notice, to-wit: Volume 3 of Knight's American Mechanical Dictionary, published at Boston, Massachusetts, by Houghton, Mifflin & Company, in 1884, and I call Your Honor's attention to the article and a cut which appears under the heading "Ventilator" on pages 2704 and 2705 of that publication, or that book, Volume 3. We have a photostat of it, which under our stipulation we can offer in evidence, and we do offer it in evidence, —where is the first page of it?

Mr. Ely: Well, this is all right.

Mr. Williamson: All right. We offer the photostat of these two pages of the publication in evidence, on behalf of the defendant, to be marked Defendant's Exhibit R, with the words "Photostat of Pages 2704 and 2705 of Volume 3 of Knight's American Mechanical Dictionary."

The Court: It may be received.

By Mr. Williamson:
Q. Now, Professor Rowley, please refer to such of the prior patents and publications that have been introduced in evidence here on behalf of the defendant, as you see fit,
379 and explain the same in a brief way, as briefly as you can, consistently with clearance, so that the Court can understand the disclosures thereof.

Mr. Ralph E. Williamson: Just one minute, until I get this exhibit marked.

(Document marked Defendant's Exhibit R by the reporter.)

The Court: Just a minute, gentlemen. The reporter cannot work when two people are talking to him.

Mr. James F. Williamson: Excuse me, Your Honor. I did not know he was talking to him.

The Court: Now, you can go ahead.

The Witness: Was the question complete?

By Mr. Williamson:

Q. Go ahead in your own way, taking them up in any order that you like, and make the disclosures clear to the Court, if you can.

A. Now, Your Honor, I will proceed with these, and I will go as rapiidly as I can, to save time, and make them clear.

Q. Tell me which one you are going to take up first, and then go right along.

A. The first question that I want to take up is the age of the art, to show some evidence of the age of the art of incubation.

I will just briefly refer to the articles in Ure's Dictionary, which Mr. Williamson presented yesterday, I believe, very clearly, of 1867. Briefly, I would like to call attention to the fact that there is an incubator, of a large size, which shows definitely stage incubation. It specifies one-twentieth
380 of the eggs per day. It has a heating system, a method of heat control; it has water supply for humidity, and, briefly, it shows that the problems of incubation were considered on a large scale, as early as 1867, or, as stated in this publication, prior to 1867,—in 1777, and this was described as of 1777; but the point is that stage incubation is not new; a large size incubator was not new, and from these publications, if we had nothing else, we would have to believe that it had been actually in practice in the early years, and, therefore, on that point there seems to be nothing new in the art of stage incubation, temperature and moisture and air control.

Passing on to the United States Patent Number 3,019, issued to N. E. Guerin, of March 30, 1843. Now, in this patent, in the specification or drawing appears, the best illustration to start with, to explain it, would be sheet number one,—pardon me,—yes, it is sheet number one; that is this sheet here (indicating).

Mr. Williamson: You can step up to the Court and explain it.

The Court: No, if the witness steps up here, the reporter cannot hear him.

By Mr. Williamson:

Q. Speak louder, please.

A. Referring to the drawing, an incubator is shown with a hot water system, the hot water circulating through the coils, as shown on the right hand side (indicating), over and under egg tray. In this particular illustration, the egg
381 trays are stacked, three high. It has a heating plant; it is apparently placed in a large building or a spacious building; the dimensions, of course, are not given, but, referring back to sheet number three, we get there a sectional plane view. And those incubator trays which we see in the first sheet are on the left side, along the left side of this view, that is, looking in the normal position,—next to the cylindrical apparatus, which is the boiler or heating plant for the incubator.

Now, in this there is a water trough through the center of the open space, the water trough which is specified for to be kept clean, and circulating the water for the chickens.

The chickens, as they are hatched in there, are supposed to be placed in nurseries, or they are called nests here, which are below the hatching trays, and extend around the side, as shown by "B" in sheet number three. Or, in other words, this, as early as 1843, is an incubator which is shown for hatching eggs on a large scale; it is in a large building; it is not one of these small cabinet incubators; it is a large scale operation.

Now, I don't think it is necessary to go into all of the details of that. I merely want to show in this case, that as early as 1843,—

By Mr. Williamson:

Q. (Interrupting) How is the air supplied to it?

A. I would rather go ahead in my own way. (continuing) As early as 1843, a large scale incubator was used.
382 Now, the air is supplied through ducts underneath,—circulating ducts or chambers that carry the air through.

By the Court:

Q. In here (indicating)?

A. They are over there,—they are underneath here (indicating). Unfortuunately, this drawing is not very well lettered up, and it is very difficut to follow, so as to say exactly where all these things are. The drawing is very poorly lettered, but the ducts are described as being underneath nests, carrying air to the nests, and they are in here (indicating), and it is perforated at the bottom, to get them through. That is as far as it goes, but air is indicated, and water is shown here (indicating).

Q. There is no fan or anything to carry the air, or draw it in?

A. There is no fan in this case; it is left to gravity circulation, so far as I can see; there is no fan in here.

Now, of course, many of these patents, and all of them will be prior patents, so that they are prior art, but I have cited those two, to show the age of the art. Now, the next question is, stage incubation. Stage incubation is not new. The first reference is to Ure's Dictionary. Now, Ure's Dictionary states definitely stage incubation, and, of course, that dates back to 1867, and refers to 1777; so there is no reason to believe that stage incubation is a new part of the art.

Now, I will refer next to the United States Patent Num-
383 ber 286,756, issued October 16, 1883, to C. F. Winkler.

Q. C. F. Winker? A. Yes, C. F. Winkler.

The Court: I don't see it.

Mr. Williamson: Here it is (indicating).

The Witness: Now, in this patent, the specifications and drawings describe an incubator which I can explain best by referring to sheet number one, Figure 1, that is this figure here (indicating). Now, in this incubator the heat is supplied by hot water air and a boiler, which is indicated below, with the numeral "I", or the letter "I", and that hot water from the boiler circulates up through the water pipe marked "i", into the water pan, or, you might say, the water chambers "g", which are placed above the egg conveyors.

Q. Are these the conveyors here (indicating)?

A. Yes, those are the conveyors there. The water is circulated up in these pans, and from those pans it comes down into the boiler again; it recirculates. It is a standard method, you might say, of hot water circulation. Now, the eggs are placed on this conveyor, which is just below the water heating pans, or the water heating chambers; they are practically pans in here (indicating). The eggs are placed in those con-

veyors through openings in the casing, which are marked "D Sub-1", and "D Sub-2". Now, the object of that is to place the eggs in that require different periods of incubation; for instance, the chicken's eggs or the hen's eggs
384 would be placed in here (indicating); the hen's egg would require a longer period of incubation, and would have to be placed in an earlier stage, in order to have the proper time of incubation.

Now, those eggs, if we assume that they are placed in "D", pass down the conveyor by stages, that is, eggs are put in between the slats in the conveyor, and are passed down by stages, the stage day, and each day the new eggs are placed in the slats, or between the slats of the conveyor, which are presented before the door "D", by the operation of the conveyor. The conveyor consists of slats between the chains, which roll the eggs down over a screen, which I believe is designated by the letter "C".

By Mr. Williamson:

Q. Never mind the letters.

A. (continuing) —over the screen, and after having passed down to the next incline, they are dropped down around the next roller, and come into the next incline, and so on pass down through from top to bottom of the incubator.

At the end of the incubator, the eggs,—

By the Court:

Q. This is the end of the conveyor (indicating)?

A. The lower end of the conveyor, Your Honor,—which is about the eighteenth day for a chicken egg,—the eggs are brought out on to a horizontal screen, in which position they are not turned; that is what is really the hatching compartment. Now, as they are passing down the incline, they are rolled down, and therefore they are turned in posi-
385 tion from time to time. The moisture is supplied by water pans which are placed under the incline, and are marked here by the numeral "K".

By the Court:

Q. You have already described these water pans.

A. Just above the moving conveyor, and at the lower end, is a roller, which contains a curtain. Now, the purpose of that curtain is,—

Q. Where is that on here (indicating)?

A. Right here (indicating). The purpose of the curtain is to draw it over the eggs from time to time, to shield them from the heat, so as to give the eggs a cooling period. Now,

in this case we have an incubator which is stage incubation. The eggs are started from the top and move downward; they are turned over as they go downward. It is heated by hot water; it has humidity supply, and air is taken in at the small openings in the sides of the cage or housing. I don't think that needs any further explanation.

By Mr. Williamson:

Q. All right, go right along.

A. Next I want to refer to the German Patent to Stulik. Now, first, I will briefly explain the mechanism by which this is operated, or the method of operation, and then I want to quote some from the specifications and the claims in the patent.

This is an incubator which has several trays of eggs stacked, one above the other. It is heated by warm air, which passes up through these egg trays. It has a stage in-
386 cubation; it has a control of temperature, and I can best explain it, probably, by referring to Figure 1, in which the heating compartment is outside, or, the hot air passes up through the opening, indicated by the arrow "K"; the warm air passes around a pipe "C" up through the opening "M", underneath the heating compartment, from where it is spread over the base, and passes up through some water tubes, or air tubes "N", and on out at the top. The air which passes through the incubator is passed up through the heating tube "C", into the incubating chamber, from where it passes up through the trays, and out at the top, as regulated by the temperature regulator, which is indicated at letter "O". That regulator also regulates the draft of the fire, or the outlet gases, to control the heat through the valve "Q".

Now, to read a little from the specifications,—in fact, I would like to read considerable of this, because this seems to have been quoted many times, as one of the important patents: "In the incubating processes hitherto known with group charging of the various compartments of the incubating apparatus, and simultaneous treatment of the groups of eggs inserted at different times into the incubating apparatus, too little attention has been paid to the maintenance of a uniform temperature in the whole incubating room. In known processes of this kind, the individual groups inserted at different times have been arranged in parallel with respect to the supply of heat medium. Either the individual
387 egg carriers were displaced laterally at given time intervals, in succession, in an incubating room traversed

by an ascending current of hot air, until the whole incubating room had been passed through, or a row of egg carriers to be charged at different times were placed under a hot water boiler, and each egg carrier by itself removed to a suitable distance from the boiler during incubation. In the first case, the self-heat of the egg increasing toward the end of the incubating period is not taken sufficiently into account, while in the latter case, where the hot water boiler arranged at the top of the incubating room, heats the same by radiation, a too rapid fall in temperature takes place toward the bottom, so that not enough steps are allowed for changing the position of the egg during the incubating period. On the other hand, the egg groups inserted into the incubating room at different times, according to the present invention, are always exposed directly to the very same current of hot water, in such a way,"—that is the hot air passes up through the eggs at various stages.

By Mr. Williamson:

Q. "In such a way?"

A. Well, that was my note in there. (continuing) "in such a way that the groups are removed progressively or by stages from the source of heat in the direction of the hot air current, and the individual groups traverse in the end the entire incubating room. In this way, the result is attained,
that the egg group freshly placed in the incubating
388 room are exposed to the full heat of the hot air current, while the older groups, farther advanced in the incubating room, are exposed to the current only after it has given up a part of its heat. The possibility is thus offered of maintaining a uniform temperature in all compartments of the incubating room, while taking into consideration the self-heat developed by the egg in the later stages of incubation, in that the heat abstracted from the air current in the superimposed or adjoining compartment is supplemented by the self-heat of the eggs. In this way, the compartments with older eggs are prevented from exposure to too great heat."

"The devices constructed for the new incubating process,—"

Q. What page is that on?

A. That is the second page,—on page two. (continuing) "—offer the advantage, especially for smaller operations, that while the apparatus is working, fresh groups of eggs can be inserted at given, shorter intervals." That is stage incubation. "The different compartments are appropriate-

ly superimposed, as in this way a good connection with the heating room is made possible, on the one hand, and, on the other hand, good ventilation, therefore effective withdrawal of the gases developed from the hatched eggs."

Now, there is a description that I am not going to omit. I don't think that is clear.

Beginning on page three: "When the apparatus is to be operated, the lowermost compartment is first charged,
389 and after some time the lowermost case is removed from the eggs and placed in the next higher compartment. The eggs could also be simply transferred to the next higher compartment. The lowermost compartment is then charged again. This operation is repeated, so that the individual groups gradually come to reach the uppermost compartment."

That shows the method of charging from the bottom up.

Now, I would like to go to the end, and read the claim which is allowed in this German Patent, or in the Stulik Patent.

Q. On page four?

A. On page four: "1. Incubating process for group charging and simultaneous treatment of groups of eggs inserted at different times into the incubating apparatus, characterized thereby, that the egg groups inserted at different times into the incubating room are directly exposed to the same current of hot air thereby, that the groups of eggs are moved by stages in the direction of the hot air current more and more from the source of heat; while this is taking place, the hot air current, first brushing the eggs freshly laid in the incubating room, and then, in succession, the older groups, transfers to the individual groups so much heat that a uniform temperature prevails in the entire incubating room, when the various degrees of self-heat of the eggs at the same time is taken into consideration."

Now, that, Your Honor, is a patent which describes large incubation, and describes incubation in which the self-
390 heat of the eggs is taken into consideration in the hatching compartment.

The next patent is Number 1,075,747, issued October 14, 1913, to C. W. Zimmer. This represents another incubator for stage incubation, in which the eggs are placed in layers or trays, which are superimposed, but between these trays are feather mats.

391 A. (Continued) Now, to briefly explain the structure, we might refer to sheet number 1, which shows a vertical cross section through the incubating chamber with two layers of eggs in the incubating compartment and one layer down in the hatching compartment. Now, briefly, this structure has the same controls—similar controls to the others. It has temperature control. It has hot water heating device which circulates the water around the jacket in order to heat the incubating chamber. It has the air inlet and outlet, and the point of difference that I want to bring out, the particular point, is the method of hatching the eggs by staged incubation. Now in operation, the first layer of eggs which—set in the operation—I think I will read a little from the patent to show the operation, better to explain it. Quoting from the specifications on page 1, second paragraph, "This invention is an improved incubator which I term a semi-fireless incubator, and by means of which the animal heat of the eggs which after having been partially incubated and by artificially or externally applied heat may be utilized for incubating other eggs, supplied to the incubator chamber from time to time." Now that states the object of the invention. Now quoting from page 2, the second column there, the second paragraph,—

Q. Line 75, do you mean?

A. Line 75: "In the operation of my incubator, and by my improved method of hatching, I introduce a layer of eggs progressively from day to day. On the first day
392 a layer of eggs is placed directly in the bottom of the incubating chamber, after the incubator has been artificially heated and while the heating apparatus is in operation, and a feather mat is placed on said layer. On the second day another layer is placed at the bottom of the incubating chamber, the first layer being placed in one of the trays and disposed on the new layer." That is the old layer—

Q. Just read the quotation.

A. I guess I better read the quotation. The quotation stops here: "And separated therefrom by a feather mat and also covered by another feather mat, I continue this process from day to day, supplying a new layer every day at the bottom of the incubating chamber and raising the other layers, so that the layers are disposed of in the order of their ages, with the oldest eggs on top. I continue this for ten consecutive days. During this period the incubator is artifically heated and is kept at the usual incubating temperature, and I continue this artificial heating for two days longer, or until the twelfth day is reached, and the upper layer of eggs is twelve days old in point of incuba-

tion. By this time incubation has so far progressed in the eggs of the upper layer that there is circulation of blood in the embryos of that layer and the said layer gives off considerable animal heat. At this point in the period of incubation the lamp is extinguished and the incubator allowed
393 to cool gradually, and when it has become partially cooled all the trays containing the eggs are taken out of the incubator and a mat of feathers is placed on the bottom of the incubating chamber. The eggs are now replaced in the incubating chamber in reverse order to the former arrangement. That is to say the oldest eggs in point of incubation are placed in first, at the bottom of the super imposed trays or layers of eggs, the newest eggs being on top. Hence, the eggs in which incubation has progressed so far as to cause them to give out animal heat are below the other eggs, and this animal heat is utilized to maintain the required temperature in the incubating chamber, and to continue the hatching of all of the eggs. The artificial heating may be wholly or partially discontinued or may be progressively reduced from day to day, according to conditions."

That, I think, makes clear the method.

Q. I think you should read the next paragraph also, Professor.

A. "It will be understood that each layer of eggs supports the weight of the eggs in the upper layers, and that the eggs in the bottom layer in which the process of incubation is most advanced, support the weight of all the other eggs. The heat of the hatching eggs causes them to expand and apply pressure to the shells thus tending to disintegrate the shells and this disintegrating process is greatly promoted and facilitated by the weight of the super incumbent layers of eggs, the weight tending to flatten the lower
394 eggs, changing the shape of their shells and hence aiding in their decomposition, and hence rendering them somewhat more brittle."

The Court: You mean to say those lower eggs bear the weight of all those above?

The Witness: That is the description here. The layers of eggs are super imposed and this feather mat in between them.

The Court: I understand, but they hold the weight?

The Witness: Yes—

Q. He puts a support under there so that whole weight don't lay on the eggs. There is a support there. Point it out, Professor.

A. I will go on with this and finish this.

Q. There is a support there.

A. "When the day arrives for the hatching of the lowest layer of eggs, said layer is relieved of the weight of the other layers. To effect this, the other layers are removed; a support is placed in the bottom of the incubator and the layers of eggs are then replaced in the same order as before." My understanding is that—

Q. In the paragraph beginning in line 26, on page 3, reference is made to that support.

A. Quoting then from line 24, page 3: "A suitable support is shown in Figure 1, and comprises a circular form, 32, having a series, say about 6, of supporting legs, 33.
395 The height of this support is such that it forms a space of about an inch above the bottom layer and below the next lowest layer, thereby providing room for the chickens to hatch at the bottom of the incubator." That is the hatching period, you understand. Now that describes, I think, clearly the method of placing these in layers one above the other. It is a progressive or staged incubation. The eggs are moved about, reversed in process and during the process of incubation the heat of the hatching eggs is taken advantage of to a certain extent for the hatching or warming up of the other eggs, depending upon the stage of incubation.

Now next I would like to show hurriedly a few gravity draft incubators.

Mr. Ely: What kind of incubators?

The Witness: Gravity draft or—

Q. Which one?

A. First, United States Patent Number 330,457, issued November 17, 1885, to C. Bassini and A. Hayden.

Q. Just use the last name, Bassini and Hayden.

A. Now in order to describe this incubator I will refer briefly to Figure 5, sheet number 2, which shows a vertical cross-section through the incubator proper. This shows that the—in this particular illustration there are two trays of eggs, one above the other. These eggs are arranged for rolling the eggs by placing them on a stationary screen—no, they are placed on a stationary rack like and the bottom is on a
396 movable screen which is operated from the outside of the incubator. By pulling that support or bottom

screen in and out the eggs are rolled backward and forward to change their position. The incubator is heated by hot water heater which is illustrated by pipes, G, at the bottom and it is also illustrated in figures 3 and 4. It is an ordinary hot water circulating system. The air is let into the incubator through an opening near the bottom on the right hand side of Figure 5, and it is let out as at the top opening in the upper left hand side. It doesn't seem to be shown as opening here, but it is a section further back. That opening is operated by a thermostatic control.

Q. Control, you mean?

A. Control, yes, operated by a thermostatic control which is shown in Figure 2 and sheet 1.

Q. Also Fig. 5?

A. Briefly the thermostat consists of a mercury thermostat which makes electrical contacts due to the expansion or contraction of the mercury and depending upon the one for heat or regulation the thermostat operates the solenoid which is shown in the upper right hand corner of Figure 5, or top, and through that solenoid, operated electrically, the temperature is controlled and the air. Now the water pans which supply the moisture are given here, and shown at g of Figure 4, small g in this case. Figure 4 shows the water pans which are placed in the incubator. Here we have an incu-
397 bator which has air currents circulating up there by gravity. The heat is by the hot water method. The eggs are turned on their trays and the trays are super imposed one above the other. And referring to Figure 2, there are two tiers of trays or two rows of trays on each side of a central part, so it shows a row of trays on either side of the central part.

Now next I would like to refer briefly to patent number 344,474, issued to Campbell, June 29, 1886. This can best be explained in operation by showing sheet number—drawing sheet number 1. This I will describe very briefly. It shows here an incubator which is heated by hot water. It has air, the outlet at the top and inlet. It has water pans which are shown underneath the water coils for supplying moisture. It has double rows, that is two rows of trays, two high. The trays are not shown in here, but the supports for the trays are shown.

Q. How about the control of heat? Is it thermostatic?

A. Thermostatically controlled, yes. The thermostat is shown at the left and it is a specially constructed water bearing thermostat. It doesn't seem necessary to go into it as the thermostat is there.

Now next I would like to refer to United States Patent number 591,870, issued to F. H. Morgan on October 19, 1897. This can best be explained—this is an incubator in many respects similar to the other—by referring to sheet number 1, which is a vertical cross-section of the incubator. In this
398 case there are two layers of egg trays, only one tray on each side, showing the eggs are placed between fixed racks with their small end downward on a movable support. Now that support moves backward and forward to rotate the eggs and change their position from time to time. The heat is supplied in this case by a hot water heater shown at the top of this cut by letter f-1. The heat is controlled by a thermostat shown at the central part between the two egg trays, and that thermostat is operated by a compressed air tank or by the air from a compressed air tank which is shown underneath the incubating chamber at e prime. That is merely a different type of a thermostat which is used on this particular incubator, but it performs the same function. The thermostat in this case operates to let the air through the incubator at the top. The top outlet is controlled, and also to operate the flame of the lamp or heater shown on the right of this section. That is merely a method of thermostatic control. The air is controlled, inlet air comes through the tubes, M prime and M-2, M-1 and M-2, you might say, coming up through the bottom of the incubator and is shown back of this air tank. The valves on top of those tubes are shown as controlled by the thermostat as well as the top opening which is shown in the center of this section. That is the thermostat controls the air and also the lamp.

Now next I would like to refer, just briefly, in this case, very briefly, to patent number 691,837 issued January 28,
399 1902, to B. S. Bell. This illustrates an incubator which is large enough for a person to walk in. It has a single column of trays heated by a heater which is shown as a lamp in this case with air inlets at the bottom and thermostatically controlled air outlets at the top. The water supplied is shown by pan 20 in figures 2 and 3, which also show the sections of the incubator. The main point here is that here is an incubator with trays stacked in tiers, several trays high, which is heated, which has water for humidity, and which has a temperature control, and which has air supply.

Q. And a big corridor to go in?

A. And a big corridor to go in which is—in which to work, a person can work.

Q. How many trays in the tiers? How many trays shown in the cut in the tiers super imposed? A. Eight.

Q. Thanks.

A. Next I would like to refer to Patent Number 1,160,793, issued November 16, 1915, to Van Keuren. To describe the operation of this incubator, the structure of it briefly, refer to drawing, Figure 2, which is a vertical cross section of the incubator shown in full view in Figure 1. This is a small type of incubator. It has a central column in here or opening. On each side of that are trays, two trays in this case and the incubator is heated by a heater which is shown on the side of Figure 1, or shown in detail, Figures 5 and 6. That
400 shows the—Figure 5, for instance, is a section, vertical section, longitudinally through the central corridor showing the circulation of the air for heating, and also the opening through which the air for ventilation passes. It passes, briefly, up through the opening 25, and inside of the tube, 26, to the central part of the incubator, the central part of the incubator. Now—

The Court: This is a tube?

The Witness: This is a tube. This is a—

Q. Speak up so the reporter can get it.

A. The hot gases from the lamp or heating element pass up from the tube, which is marked 18, which is inside of the heating chamber and that tube, 18, is really the heater which heats the air going into the incubator. That is the air is heated partially as it passes in at 25, and the remainder around that tube 18. Now referring to Figure 2, the circulation of air through the incubator proper is as follows: We have carried the air up into the central corridor around the heating chamber from the other cut or figure. From here it passes downward under the partitions there on each side of the central compartment, as illustrated by arrows 8. The warm air passes downward under there and up to the bottom part of the trays. From there is passes to the ends of the trays, either end and up by the end of the trays over the baffle plate which is indicated by 10.

The Court: It just circulates up through there?

401 The Witness: It has to pass around these.

These are solid bottom trays, so it passes around the ends of the trays in this case.

Q. It passes through the trays too, don't it?

A. It passes around them at the end of the trays.

The Court: You mean this end or around this end?

The Witness: No. If you refer to Figure 3 it passes to the two ends and up through the space at the end of the trays and around the trays from here. And from the top of the trays it passes around the baffle 10.

Q. Baffle plate you better say.

A. Baffle plate 10, into the central corridor, or rather it is not corridor, central opening which I believe is 40.

Q. You mean the one at the top?

A. The one at the top, yes.

Q. Is it thermostatically controlled?

A. This incubator has the water pan. I won't take the time—I can't find the thermostat right now. It seems to me he specifies in the specifications that any type may be used. At this moment I don't see it.

Q. How does the air circulate in that Van Keuren incubator, this patent number 1,160,793, compared with the air circulation in the Smith machine, in the machine of the Smith patent.

A. Well, the air circulates in this machine, comes down, as I have explained, underneath those partitions on each side or portion and up to and around the trays and up to the
402 top of the incubator. That is it passes down and up through the trays.

Q. And the corridor is partitioned off from the tiers of trays?

A. Yes, the corridor is partitioned off. It can't pass directly through the partition.

Q. Go ahead.

A. Now next I would like to refer to—well, I might call attention first to the fact that the patents both—all three of these I have referred to, I believe, Bassini, Morgan and Van Keuren, also circulate in this same method that I have just explained, through the corridor and up through the trays. I don't know that I called your attention to that.

Next I would like to refer to patent number 916,454, issued March 30, 1909, to Koons. Now in this, to get the general structure, refer to Figure 1, which is a vertical cross-section through the machine. Now in this vertical section at the top there is a hatching compartment shown at 5. Immediately below that is a chicken drying compartment, another compartment shown at 10. Immediately below that is a water compartment which I believe is shown at 90, and immediately below the water compartment there is a heating device. Now I will explain the operation of the heating device—or immediately below the heating device is another tray or drawer there for the young chicks. Now the heating device can

probably best be explained by referring to Figure 7.
403 The heating device consists, referring to that view, of a lamp or heater, 16, the gases from which pass up through the chimney 17 into the space 12. From the space 12 they pass to the opposite side of the incubating chamber and turn back in a parallel space, 13, which is best shown on—in figures 2 and 3. In Figure 3, which is a cross-sectional view, perpendicular to the floor of the heated—hot gases next to the lower compartment, the cross-section of 12, is shown in the right, and the cross-section of 13, the return pipe is shown—or 12 is shown at the left and the cross-section is the return pipe, 13, at the right. That same arrangement too, is shown in Figure 5. The pipe, 12, passes in that figure from right to left, where it communicates with 13, back through 13 to the opening, 18. Now from opening, which is from the return pipe, 13, if we refer to Figure 1, the hot gases pass up through the chamber, I believe marked 21, marked 21, and out at the top. Now that represents the circulation of the exhaust gases from the lamp or the products of combustion from the lamps, of the gases through the incubator and out and it doesn't come in contact at all with the air. Now the air circulation through the incubator—

Q. You better state how the air is heated first.

A. The air which circulates through the incubator comes in at opening, 7, figure 1.

Q. Where is that, bottom or top?

A. It is near the bottom by the lamp.

404 Q. Oh, yes.

A. From here the air passes around the heating pipes, 12 and 13, and up into the space over the hatching and around the hatching trays through the pipe in the rear of Figure 1, marked 8. After passing into the hatching and other chambers there, the chick drying chamber, it is drawn across by—or to the right hand side of the incubator as looked at in Figure 1 to the outlet pipes marked 54.

Q. You mean through the outlet pipes marked Figure 54?

A. Through the outlet pipes marked 54. Now these outlet pipes deliver into the chamber around the—with the hot gas—

Q. Marked 22, isn't it, Fig. 1?

A. Yes, that is marked 20.

Q. 22, isn't it, in Fig. 1?

A. No, 22, I think that represents the valves that operate the main. At any rate it comes right into this chamber here.

Q. It is 20. You are right.

A. 20, and comes up in that heated chamber, passes up and that gravity circulation there will depend upon the height

of the column of warm air there. Now the regulation of temperature is by a thermostatic control which in Figure 1 is shown, that is the thermostatic element in Figure 1 is shown as 34. The thermostatic element then operates a control over the chimney of the lamp which opens up that valve, 22, or closes it, depending upon whether heat is required
405 in the incubator or whether it is to exhaust directly without going through the incubator. I think I have called attention to the water pan at the very—

Q. But you have not yet described the operation and I call your particular attention to the part of the specification that begins about line 29 on page 2, and continues through to line 30, line 29 on page 3 of the specification where he talks about forced draft.

The Court: That is, he forces it by heat.

Mr. Williamson: Yes, by the height of your chimney sucking it up.

The Court: No fan or any other contrivance?

Mr. Williamson: No fan. No fan.

Q. Please point that out to the Court.
A. I pointed that out, I think.

Mr. Williamson: He has even got claims to it.

Q. Read a portion of it so as to make clear to him.

The Court: The apparatus itself shows that without any reading.

Mr. Williamson: Oh, you understand, do you? But he puts great emphasis on the forced draft. The height of your stack, you can get any suction you please. You understand that.

The Witness: Yes, I think I have made it clear, Your Honor. The stack, you could get anything from that depending upon the height of the stack.

406 Q. All right. Go on then.
A. Now, as to heating, moistening, fresh air circulation and thermostatic control, many of those patents show that, practically all of them.
Q. That is in this patent?
A. Show all of those elements. I don't need to go into that. Now, I would like to—
Q. Go ahead with the next one.

407 A. Now, I would like to call attention to the patent, 426,321, issued April 22, 1890, to Proctor & Knowles.

Q. Proctor & Knowles, is it?

A. Proctor & Knowles. This and the next three or four I am calling attention to show the closely allied art. These are not incubators, however, they are very closely allied in the operating method. Now, to explain the operation of this, without going into all the modifications, I would refer to Figure 8, sheet number 2, which is the lower figure here, and it shows one of the many modifications of the structure. In this form there are two chambers shown side by side, and I will take the one on the left to show the air circulation at the center of the chamber,—

The Court: At the top?

The Witness: At the top center, and is a fan C, which is operated through a shaft D, which extends to the bottom,—I think that is a belt drive, but, that is immaterial. It is operated by that shaft. On the sides of the large chamber there are heating coils B, and between the fan and the heating coils there is a shield, or a drop-shield indicated at G. Now, that shield extends around to the fan and when in operation the fan pulls the air downward, as shown here, into the chamber beneath, in which the material for drying may be placed, and up through the heating coils and the air circulates, the major part of it, back to the fan. There is an opening shown on the side of that H for the intake of new air and

408 the discharge at the bottom, shown as I, for the discharge of the air taken off,—any proportion of it may be taken in and out,—they may be regulated to take in a part of the air as new air, and discharge a part at the bottom. Now, in this circulation we have a very similar circulation to that shown in the Smith patent. This is a drying machine, but we have a downward circulation of air through a central corridor in this case, up through the heating coils and back to the fan again, with provision for circulating all of the air, or admitting partly fresh air.

Q. Professor, how does the air get back into the eye of the fan? You may have to refer to some of the earlier views there to show that, where these partitions, as I understand it, between the two sections of that chamber, are perforated?

A. I think that is clearer here.

Q. Make it clear to the Court.

A. The space above the heating coil is a perforated space to let the air through from the lower to the upper chambers.

Q. You mean as a perforated or graded floor?

A. Yes, to let the air through. It was designed to be placed in some modifications between the floor,—not that,—it is designed in the large installation to be placed in two rooms, one above the other.

Q. How about the question of the size and capacity of this drying machine disclosed in the patent you now have under consideration?

409 A. This is a large size, designed to be placed in between rooms or floors.

Q. What is the purpose of the floor?

A. All sorts of drying purposes.

Mr. Williamson: This patent was never before in Court, so far as I know. It is a new one.

Q. Go on.

A. Next I want to refer to Patent Number 553,723, dated January 28, 1896, to Proctor. This relates to an apparatus for ordering or conditioning tobacco. Now, to explain this best, we can refer to Figure 1, which is a vertical cross-section through the machine, and in this cross-section it shows a central corridor with a fan above it, and it shows a compartment on each side. It shows in those compartment racks, showing tobacco hung on the racks and on trucks, or rollers, or, in other words, those racks may be pulled in and out on the trucks. It is a large size machine, evidently, from this drawing. That is a truck, and the method of rolling in and out is best shown by sheet number 3. There is a large truck in there with the racks on, which are rolled in and out and loaded outside of the apparatus.

Q. Outside of the cabinet?

A. Yes. The air circulation in this is as follows: The air from the fan,—

Q. Look at Figure 2. There is more than one fan, is there not?

410 A. Yes. I will explain that. Referring to sheet 2, that is a vertical top section.

Q. A horizontal section?

A. It has a horizontal section showing,—

The Court: Placing the fan above the corridor.

The Witness: Placing the fan above the corridor and it shows the corridor and a space for tobacco or space for the racks on each side. The air is circulated by the fan down through the corridors to the bottom, where it passes out under the openings of partitions of the,—

Mr. Williamson: You mean through?

The Witness: Yes, it passes out.

The Court: Are there partitions on the side of the corridor?

The Witness: Yes.

The Court: It passes under it?

The Witness: It passes down to the partition into the side compartments. From here, it passes up through these side compartments up through the top, which is illustrated there in the open work, or slats E-2 and E-3, from where it is drawn back to the center compartment, and again re-circulated by the fan. Now, in this machine the circulation in here is almost identical with that in the Smith incubator. The circulation of the air is down through the corridor out under the side of the partition, up through the compartments on either side.

411 Q. You mean the bottom of the partition, instead of the side?

A. Yes,—out under the bottoms of the partitions to the side, up through the compartments on either side, and back again to the fan. Also there is a device for adding humidity or moisture to the air. That humidifying device is shown in sheet 3,—sheet 1.

Q. Figure 2, isn't it?

A. It is shown in sheet 1, as G, with the exponent 1 to 3.

Q. It is also shown in Figure 2, isn't it?

A. It is also shown in Figure 2 by the same letters. In this apparatus the partitions in here promote the same function as the curtains do in the Smith incubator. They draw the air downward and give us a positive circulation in a positive direction. They are simply partitions, instead of curtains.

Q. State whether or not the air in the machine, by this Proctor patent, moves down in columns through the corridor, or not? A. They do.

Q. It is moved in columns up through the space where the tobacco is hung? A. Yes.

The Court: The tobacco is just hung down there and it moves up through it?

The Witness: Yes.

The Court: And the corridor is an open space and it
412 goes down through the corridor?

The Witness: Yes.

Q. Is there any difference whatever between the air circulation in the machine of this Proctor patent, and the circulation in the Smith machine?

A. No sir, except there may be a little difference in the details of construction, as built.

Q. I am talking about the methods.

A. The methods are the same. The difference in the air, I might say, is the supply of the new air,—in the incubator you take in a little new air, and the circulation is the same, but it is not necessary to take in new air.

Q. Go on.

A. Next I would like to call attention to Patent 1,010,809, issued December 5, 1911, to Schmidt & Shutterle, and this is an apparatus for drying macaroni and light bakery products. The method of operation and the description of the,—

Q. Describe the structure enough to make it clear before you talk about the operation.

A. All right. The description of the apparatus can best be shown by referring to Figure 2, on Sheet number 2. Now, in this figure there is a drying compartment,—to begin with, it has a large size casing, or housing. In the lower right hand side there is a rack of trays, which is placed on rollers, as shown there, to be taken in and out. Now, the material, of course, is dried and is placed in here on a tray or
413 rack. There is a fan just at the left of those racks, shown at B, which is operated from the outside by a shaft, or pulley, indicated at 4, and back of the fan there is a series of steam coils E, pipes, but they are shown in sectional view here of course, for heating the air as required. At the top of the fan there is a valve, or flap, you might call it, 12, which goes clear across the machine and hinged at the back so that it can be opened and closed. Above that in the casing, the opening shown at 9, figure,—

Q. Figures 1 and 2

A. There are two of them shown in Figure 1, and they are also shown in the sectional view in Figure 2.

Q. And Figure 4.

A. Now, at the rear in the lower part is an opening 7 for an inlet of air; that is for a change of air in the drier. This can be regulated to take in outside air, or they can be regulated so that all of the air is circulated within the chamber. Now, in addition to that, there is a humidifying apparatus shown at 15, Figure 2, right back of the fan.

Q. You mean outlet of the fan?

A. At the left of the fan. That same humidifier or spray, is shown in Figure 4 by 15 at the central part. Figure 4 is

the section that is back of the fan. Now, the circulation of air in this is caused by the fan.

Q. How about the pitch of the blades, before you come to that,—the pitch of the blades on the fan?

414 A. The blades of this fan are pitched forward, as in a perpendicular fan, to propel the air passing through it forward and the air is supplied from the rear of it or left of it, in this view and propelled forward into the drying compartments.

Q. What is that part marked 10, shown best in Figure 2 and Figure 4 of the drawings of that patent?

A. It is a top of the partition, or the false partition to draw the air forward. It is a partition or ceiling above the drying compartment.

Q. Go ahead.

415 A. To describe the circulation of air in the machine, the fan is rotated to propel the air from the left of the fan, in this case, to the front or right of it, through the fan, and the air is driven through the drying compartments, through the trays indicated by R, to the right wall of the drier; from here it is forced up through the opening between the ceiling 10 and the right wall to the space above the ceiling, from where it circulates back to the left, and, as the valve 12 is now set, it circulates back to the rear of the machine. It circulates back to the rear of the machine, pulled through the heating coil E and past the humidifier, back through the fan; or, in other words, the air is recirculated by the fan through the drying compartment up into the false ceiling, which carries it back to the rear, through the heating coil, and the greater part of it is re-circulated. The inlet opening 7 and the outlet opening 9 may be controlled to let new air in, and a part of the mixture out; that is, all of the new air will be circulated, but, new air may be added as needed. If the valve or cover 12 is raised up to the dotted position, shown in Figure 2, then, in that position a part of the air will be re-circulated over the heating coil and a part of it will be re-circulated in front of the heating coil, or, in other words, the temperature will be controlled by the regulation of the valve. You can either heat all of it or part of it, or none of it. The valve can be regulated to control the heat. Now, in this apparatus, we have an apparatus which has got all of the

416 elements of an incubator. We have got a chamber and heating control; we have got humidity; we have got new air supply and old air provided for; we have got in the compartment racks or trays which could be used for egg trays, or a space which could be provided with suitable egg

trays. If, in that space, suitable egg trays were provided, this machine has all the elements for hatching, just the same as in the other incubators. We have got temperature, humidity and air circulation and new air,—the requirement would be suitable egg trays.

Q. Is the heat controlled?

A. The heat is controlled by the flap 12, and further, it can be controlled by the,—the heat can be regulated by the amount of steam or water which is admitted to the coils, as well as by the flap, or valve 12 in the incubator.

Q. Now, state whether or not, in your opinion, the machine disclosed in that patent that you have just been discussing, to-wit, the Schmidt and Schutterle Patent, 1,010,809, of December 5, 1911, could be used just as it is there disclosed, for hatching eggs.

Mr. Ely: I object to that question.

Mr. Williamson: It is a perfectly proper question. He has made a close study of all these patents, and he has read all this testimony of Mr. Snow and Mr. Taggart, and all those people, and he knows enough about incubators to answer that question, and he is a high class mechanical engineer,
417 and all I am asking for is his opinion, and I think he has a right to show that.

Mr. Ely: I don't think he is qualified.

The Court: He may give his opinion.

Q. Go ahead. A. Yes.

Q. You said you can?

A. I answered your question "Yes."

Q. Go on.

A. Next, I would like to refer to Patent 1,137,752, dated May 4, 1915, to Goldstein. I will explain the apparatus by referring to Figure 1. This consists of an apparatus for artificially aging cigars. It consists, as shown in this figure, of an outer casing 9, and an inner casing 10. The inner casing, front walls, the ceiling and floor extend clear back to the rear wall of the casing 9.

Q. Explain to the Judge the view, so he will understand it.

A. The view I am referring to is a vertical sectional view down through the housing. In the ceiling of the inner casing, shown as 10, and the floor of the inner casing, also shown as 10, are perforations or openings for admitting air to circulate through the casings. These perforations are also shown in the partially sectional view of Figure 2. In this, there is

a heating coil 11, supplied by heat from the heater 14. That is shown at the right of the Figure 1, and also in the lower part of Figure 3. Above this, there is a fan which cir-
418 culates the air, as I will explain later, and above the fan is a humidifying apparatus, which consists of a tank of water 13, and a heating element,—electric heating element 17. The humidity supplied by heating the water in the tank 13, that is by means of this electric heating element, and the heating element is controlled by apparatus marked 21, or the humidistat. That operates to throw the heat on and off from the heating element to control the humidity in the inner chamber. The heat, which is supplied to the coil 11, is controlled by the thermostat marked 20 in the inner casing, which operates a solenoid control valve 25 from the heating coil, or, in other words, the thermostat 20 controls the heat by controlling the water to the heating pipe. The air circulation is as follows: The fan 12 drives the air upward through the chamber, into the space between the ceilings of the outer and inner boxes. From there it is filtered down through the inner cabinet, out through the lower opening 10, in the lower part or floor of the inner cabinet space. It comes back into the space and then it circulates up through the heating coil 11, and re-circulates in the chamber. Here we have re-circulated air,—air re-circulating in the chamber with humidity control and temperature control, which is, in this case, for the purpose of conditioning cigars.

Q. The air is circulated by a fan, is it not?

A. By a fan,—positive circulation. Next, I would like to refer briefly to Patent Number 745458, dated Decem-
419 ber 1, 1903, to Perkins. Now, I will go over this very briefly. It illustrates an electric incubator. The incubator is in sections 10 in Figure 1, which shows a vertical section with one egg tray. The feature of this egg tray is that it tilts back and forth, and the eggs are placed in troughs which are shown in Figure 2, and, as the tray tips, in either direction, the eggs will roll down this trough, depending upon the clearance space. The trough is perforated underneath, and it is a particular means for controlling or for turning the eggs during the process of incubation, and it illustrates an electrically heated incubator, which has also electrical control on it.

Q. I call your attention to the elements E Prime on Figure 1 of the drawing, and ask you to state what they are. Aren't those solenoids?

A. E and E Prime are both solenoids and those solenoids are used for the purpose of tilting the tray back and forth.

Q. It tilts the trays? A. Yes.

Q. The eggs are not changed by rolling, but by tilting the trays?

A. The eggs are changed by tilting the trays, and the eggs roll,—there is a little space at the end, and they actually roll down there, as I understand the facts in this case.

Q. All right.

A. Now, next I want to say something as to the art of heating and ventilating of houses and buildings and homes.

420 Mr. Ely: That is objected to as improper.

Mr. Williamson: It is very highly pertinent. There is no difference between heating and ventilating an incubator than there is in heating and ventilating a room. Judge Hickenlooper, in a case so stated in his decision. It is a heating and ventilating problem pure and simple.

The Court: I think I will hear it.

A. I have not got the reference on that.

Q. Which one do you want?

A. I want Knight's Dictionary reference.

Q. Do you want the patent or the photostats? Here is the book.

A. Well, I will explain: Briefly, the reference, as illustrated in Knight's Dictionary, on page 2705.

Q. 2704 and 2705.

A. And the date is 1884, the dictionary.

Q. Volume three?

A. Volume three. Now, referring to this figure 6960, it is a vertical cross section through the Senate Wing, United States Capitol, showing the pressure and exhaust of the ventilating apparatus. Now, in general, I might say the forced air circulates through this chamber, and the new air is drawn in it outside the opening A,—through an opening A in the outside wall, at the lower right of the figure. It is drawn in by a fan, and it is then passed through steam heating coils for temperature regulation, into a chamber where
421 moisture is added, or humidity, up through a duct, or flue, marked C, into a space or air chamber under the Senate floor. From here it passes up through openings in the Senate floor, and is filtered through the room and passes out at the top into the upper space, from where it is exhausted or pulled down a shaft or column D, by an exhaust fan shown at the left, and discharged out through the column E to the outside, or, in other words, it is a ventilating system that was used at that time in which air is pulled through

a fan and forced through coils and humidified, and into the chamber, and exhausted by positive circulation out of the chamber.

(Recess taken until two o'clock p. m., November 22, 1932.)

---

422 (Professor Frank B. Rowley resumes the stand.)

(Afternoon Session, November 22, 1932, 2 o'clock P. M.)

Direct Examination (Continued).

By Mr. Williamson:

Q. Proceed in your own way, in the explanation of the patents, unless you are through, and publications.

A. I would like to refer to Patent Number 260,223, issued to Johnson, March 29, 1887, showing an electrical apparatus for heating and cooling a building. In explaining the apparatus and method as shown here I will refer to Figure 1 of sheet 1, which shows a vertical cross-section through a building showing three floors and a basement, or at least a lower floor. The apparatus consists of the housing in the lower compartment or floor, A, with heaters in it, and pipes or air ducts, marked C and D, leading up through the walls, to the rooms in the upper two floors. Pipe C leads to the second floor, and pipe D to the first floor, which are considered the lower room or basement. Leading into chamber A is a pipe from the outside marked B. In the upper ends of the two pipes C and D, are electrical driven fans, marked G, and driven by motors marked H. These motors are controlled by thermostats which are shown in either room as KI. Those thermostats operate to reverse the direction of the fan motor. That is they reverse the motor so that the fan, G, may be operated in either direction. Now, if operated in one direction, the motor—I mean the fan, G, is so driven as to drive
423 the air out into the room, therefore draws the air up through the pipe, C or D, as the case might be. The air is drawn out of chamber A and if it is blown into the room it is then discharged out of outlet L in the upper part shown here. If both pipes or all pipes leading from the compartment A happen to be drawing air at the same time, then the air is supplied to the compartment A through the pipe B shown in the lower left hand corner running to the outside. Now, if the pipes leading from the chamber A happen to be so operated or controlled, the motor so controlled, that half of them are taking the air out of the chamber and

half are putting air into the chamber, A, then the pipe, B, is inoperative. That is, the air is put in in one side and out the other. And in case the pipes, or fans rather, G, are drawing air out of the rooms, both of them pulling it into the chamber—pushing it into the chamber, A, it is then discharged through the pipe B to the outside and drawn in in that case through the dampers or controlled openings, L, in the left wall of this section. This then is a means of controlling the air supply to the rooms, either in or out, by electrical fans which are reversible.

Next I would like to refer to Patent Number 843,909, February 12, 1907, Peters and Hungerford. Referring to—rather it is the only figure, referring to the figure in this patent we have there a vertical cross-section down through the complete room and the apparatus shown below the room for heating and cooling and controlling the humidity
424 of the air in the room. Now, first explaining the apparatus on the lower right hand side—lower right hand corner, there is a fan which draws air in either from the outside, outside air, as shown by the damper in inlet marked 13 at the right, or it draws air in from the other side through the damper in inlet marked 12. That is this fan may get the air supply through either of those lines. The air is discharged from the fan to the left where it is either passed through the cooling coils which are marked 18 or rather 18-A, I believe, or it is by-passed under those cooling coils through the pipe, 26, continuing on to the left. I will explain those in just a minute, how they operate.

The Court: Through the pipe 26?

The Witness: Through the pipe 26, that is right. It either goes up here or around there.

The Court: Oh, yes. It comes in through here.

The Witness Yes, it comes in through here. After it leaves the cooling coils or the by-pass around the cooling coils, it passes to the left through the connection on pipe 19. From there it passes on, either through the heating coils shown as 20-A in housing 20, or else it passes under the heating coils and continues on through the pipe 27, into the pipe, vertical pipe 22. That is the air goes from this pipe 19, either one of those circuits, one or the other, and that depends on the call for cooling or heating.

The Court: It may shut off or—

425 The Witness: Yes, it may go through either one of them. In other words that is a—

The Court: Controlled there one way or the other.

The Witness: Yes, what is required, heat or cold. I will explain that. The air passes up the pipe 22, into the pipe over the room where it branches out, as shown here, into branch outlets 23, 24 and 25. From those outlets it is delivered to the top part of the room which represents an ordinary living room or an occupied space. That is this space confined here represents an ordinary room. From these top outlets the air is delivered downward in the room and passes out, either through the registers which are marked 49, 50 and 51, and delivered into the return air pipe, 11. From 11 it is drawn back through the damper control, 12, and into the fan. Now in that cycle the air is recirculated through the fan. Then it is either cooled or by-passed—the cooler may be used, or by-passed. It is then passed through the heater, which may be either used or by-passed; brought into the top of the room; brought down through those outlet registers, and back to the fan in a re-circulating manner. Now there are thermostatic controls here which operate the heating and cooling coils, depending upon the requirements. To begin with there are two thermostats,—yes, two thermostats, one marked 35 and the other marked 36. There are two humidistats, one marked 37 and the other 38. The
426 thermostat 35 and the humidistat 37 operate together to control the by-pass around the cooling coil. That is if the air becomes too hot it is passed through the cooling coils and also, if it becomes too moist, too much moisture in it, it is passed through the cooling coils. In other words the cooling coils act either for cooling the air or for de-humidifying it, controlling the humidity downward.

The Court: This is just one of many examples of cases of instances where apparatuses are made for conveying hot air and forcing it to the fans and controlling it by thermostats and humidifiers and forcing it through passages and heating rooms and so forth, isn't it?

The Witness: Yes, this is an exceptionally good illustration of full air condition controlling apparatus as shown in this patent. It shows cooling, heating, humidification and de-humidification, or complete air conditioning. And the the point is that the air within that room is competely controlled, part of it can be recirculated, or all of it.

The Court: By this apparatus.

The Witness: By this apparatus, and part of it can be taken from the outside by this apparatus.

The Court: That is nothing very new, is it?

The Witness: Oh, that is very old.

The Court: This method of doing it is patented, I suppose?

The Witness: This has run out. This is an old
427 patent, I presume.

The Court: Yes, it is.

The Witness: But I merely wanted to show Your Honor there is nothing new in this process here. It is extremely old, and in this house in here in that room you could place eggs—

The Court: Of course you wouldn't have to spend much effort to show me this isn't new. There are so many different things I know about myself.

Q. State whether or not this very room shown in this patent you have just been talking about, 843,909, could be used as an incubator?

A. Yes, kept at the same temperature as an incubator.

Q. In your judgment. Go ahead with the next. I might ask you this question: How do these disclosures of heating the room and ventilating and air conditioning compare with your own experience on that subject?

A. These are common practices. This is the common method.

Q. Go ahead.

A. Now the next, I would like to refer to some publications here, which have been introduced, I believe.

Q. Photostats have been introduced.

A. Photostats of these publications, in order to show that the use of fans in incubators is not new.

The Court: Well, that wouldn't be new. They are old generally in the art.

428 The Witness: In the art, very old.

The Court: But they have been applied to incubators?

The Witness: Yes.

Mr. Williamson: That is just what these publications show and what Mr. Smith's testimony shows, it dates over

two years before he applied for the patent. That is what we are coming to.

The Court: It wouldn't take very much to convince me of that, that is, that that method of operating, of controlling the air by fans and by thermostats, is nothing new.

Mr. Williamson: He used it himself at a date over two years in the same kind of a machine, except it didn't have curtains, and here are two publications that relate to it, but I am relying on the publications themselves that describe such and such a thing.

The Court: I don't suppose they claim here that that is anything new, but they are claiming, I suppose, a combination of all the things.

Mr. Williamson: On the contrary that is just what they are claiming. They are asking you to give them the benefit of a claim that is broad enough to cover any kind of an incubator with it, with a fan which would circulate the air. They did that in all these prior suits.

The Court: If they are doing that, it is pretty broad.

429 Mr. Williamson: That is what they are trying to do, and that is what they did in every other suit that has gone up to the Circuit Court of Appeals.

The Court: My only object in speaking was that it seemed so plain and so simple that hot air can be controlled by fans and sent to various passages; that it can be controlled by humidifiers and can be conditioned by humidifiers.

Mr. Williamson: This is the most important piece of proof that we have got in our case, what Mr. Smith said about it. I mean his own usage and difference, to control the meaning to be according to those claims.

The Court: My only object in speaking was I didn't want you to think I would have to sit here for very long without knowing that the use of fans in controlling air isn't new.

Mr. Williamson: I am very glad you spoke about it.

The Witness: Your Honor, I will make it as short as I can. I am not gonig into Smith's testimony because that is in the record.

Q. Speak a little louder. I can't hear you.

A. I would like to refer briefly to these two articles or these two publications, of which I have photostats, and read, as rapidly as I can, in order to explain the apparatus as set forth and as I understood Smith's testimony and compare it with the present Smith incubator.

Q. He admitted those publications.

430 A. What is that?

Q. He admitted those publications and those articles.

A. Yes.

Q. Read from the earliest one first.

A. I will read first from the Sunday Plain Dealer, February 23, 1913, Page 5. "One of the largest egg incubators in the country has been built in an old church building at 7918 Madison Av. N. W. by S. B. Smith, and several hundred thousand eggs will be hatched in it between this time and July. The capacity of the incubator is 100,000 eggs. It will be kept filled continuously until the latter part of July, and it is estimated that about 60,000 little chicks, or about 60 per cent of the eggs put in, will be hatched every three weeks.

"The chickens will be disposed of in large and small quantities when they are a day old and, it is said, some of the large department stores in Cleveland will sell them in dozen lots.

"Before building the immense hatchery Smith, who is a chicken raiser of wide experience, came to Cleveland and looked over the field. As the result of his investigation he says that he can place the entire output in this city or its immediate suburbs. He believes that Cleveland is the best chicken city in the state.

"The big incubator is built with three compartments. Each compartment will hold 33,300 eggs. One compartment was filled last week. Another will be filled this
431 week and the third will be filled next week, and at the end of that time the first compartment will have hatched its eggs and will be ready for filling again."

The Court: Right there. Are they going to put 33,000 eggs in in one week?

The Witness: In each compartment.

The Court: In each compartment?

The Witness: Oh yes.

The Court: They couldn't do that in this machine according to this testimony.

The Witness: They wouldn't hatch them—

Mr. Ely: Not according to the patented process, you don't put them all in in one week.

Mr. Williamson: You don't put them in all at once.

The Witness: "In this way, after the first three weeks there will be about 19,800 chickens put upon the market every week.

"The eggs are placed in the compartments in small crates swung on wires from wooden spools fastened to the ceiling. A screen is placed over each crate, holding the eggs firm, and then, by an automatic arrangement, the crates will be turned over twice a day the first week, four times a day the second week and six times a day the third week.

"The compartments are kept at an even temperature of
103 degrees. Coils of hot water pipes are laid on
432 the floor of the compartment, and an electric fan attached to the ceiling throws a current of air straight down to the floor, where the air comes in contact with the hot water pipes, is heated and circulates upward through the egg crates on each side." That is exactly the same—

Q. Go ahead. Read on.

A. "A thermostat is placed in each compartment and the temperature is kept even by this means. In addition to this provision there is a thermostat placed on the hot water heater, as shown in the smaller of the illustrations, and this causes the water to cool off or heat up to meet the changes in the temperature of the outside air.

"Smith's average of 60 per cent. successful hatching is a high average, but it was maintained last year by him with a 75,000-egg incubator which he operated in Attica, Ohio.

"All the eggs which he hatches come from hens which he has bred. There are about 9,000 hens of his farmed out to chicken raisers in the neighborhood of Attica and the eggs are shipped to Cleveland every Saturday.

"The incubator will be open to public inspection at all times, and a special device for illustrating the growth of the chicken in the egg has been arranged, so that the little chick can be seen through the shell."

That is the publication describing it.

Q. That is the earliest paper. What is the date of
433 that paper?

The Court: February 23, 1913.

Q. Now read the other one, about a year later. State the title of the article.

A. Now I read from the Cleveland Leader, Sunday, February 22, 1914.

Q. Title of the article?

A. The headline of the article, "Cleveland boasts largest hatchery. Plant operated by S. B. Smith has a capacity for 120,000 eggs at one time.

"Although not much mention has been made of the fact, Cleveland is the home of the largest chicken hatchery in the world, the only possible competitors being Egyptian hatcheries. S. B. Smith, formerly of Attica, O., is the proprietor of the Cleveland hatchery which was put into operation last year.

"The plant is located in the old German Lutheran Church at 7918 Madison avenue, and has a capacity of 120,000 eggs at a time. Last year Mr. Smith sold the larger part of his output in the city and the rest in Chicago, but this coming season he expects to market all of his chicks in this city.

"The plant is not only the largest in the world but is also the only one in existence operating on the same system, the system being the result of experiments by Mr. Smith covering a number of years. Other experts have tried
434 out plants along similar lines, especially Milo M. Hastings, a noted poultry expert and formerly with the United States Department of Agriculture, but Mr. Smith has been the only man to devise a practical plant along the same lines. In the plant here, the universal temperature system is followed, every cubic inch of air in the hatching chambers being of the same temperature. There are four hatching compartments, each having a capacity of 30,000 eggs or chicks. The eggs are placed in enclosed trays, suspended from the ceiling and pivoted at each end, allowing the trays to be turned three times a day. When the compartments are filled, one attendant can turn all of the trays in about one hour. Because of the method used there is no breakage of eggs in the turning process.

"Heated by Water and Steam.

"The entire plant is heated by hot water, but the hatching compartments themselves are heated by steam, coils being arranged about the walls near the floor. A fan is suspended from the center of the ceiling, driving a shaft of air to the floor through the center aisle and the air, passing over the heating coils, works back up through the trays. So perfect

is the distribution of heat that the temperature of any part of the compartment will not vary one-half of a degree from any other part. And while the eggs are thus exposed to a moving atmosphere, there is no draft to reach any of them.

"The temperature is automatically regulated by
435 seven thermostats. One master thermostat, operated by steam that burns the coal and keeps an even steam pressure, is the main factor, but there are, in addition, two thermostats outside of the compartments and four inside, one in each compartment. The two external thermostats regulate the outside temperature. The instruments on the interior of the compartments seldom are called upon for work, but serve to act as a check on the master instrument and the exterior thermostats.

"Moisture is Regulated.

"The most important factor in hatching eggs is the regulation of the amount of moisture in the compartment, and this is regulated by humidistats of special design originated by Mr. Smith. These are similar in a degree to those used in large buildings. No other system has ever taken care of the problem to any successful degree.

"The eggs, after being placed in the hatching compartments, are kept there for a period of twenty-one days, although this period can be varied to a certain extent. Three days before hatching time the trays are raised from the eggs so as to give room for the young chicks to walk about after hatching. The chicks are kept in the trays for twenty-four hours after hatching and are then placed in large brooder until sold.

"One of the features of the system is the fact that the exact temperature of the embryo can be told at any time, and the plant is so operated that the temperature of the
436 embryo is kept constant.

"The plant was placed in operation a year ago and Mr. Smith has already built up a large patronage for his chicks. On account of the decreased cost of production the chicks can be sold at prices less than has been asked in the past. The first eggs were placed in the hatchery last Friday and the first chicks will be hatched in three weeks. Mr. Smith is glad to show the plant and its method of operation to visitors at any time."

Q. Now, Professor Rowley, were you present during the examination of the plaintiff, Mr. Samuel B. Smith?

A. I was.

Q. Have you read his testimony as transcribed by the reporter? A. I have.

Q. Lately? A. I have.

Q. In his testimony Mr. Smith stated that he had built at Attica, Ohio, and taken over to Cleveland, Ohio, an incubator which he there ran for some two years, and I think the years that he said he ran it was 1913 and 1914, and then he described the structure of that machine. Do you understand that structure as Mr. Smith described it? A. Yes.

Q. Have you made or can you make a sketch of that machine which Smith described so as to help make it clear to the Judge?

A. Why, yes, if I had a piece of paper.

437 Q. Take some paper here and make it.

Mr. Ely: I object to that, Your Honor. Your Honor sat here and heard the testimony.

Mr. Williamson: Very much easier for you to understand it if we have the sketch. It is very much easier for you to understand it.

The Court: All right. Let him do it. Hurry along.

Q. Do it fast. Here, do it quickly.

The Court: He is drawing a plan and it will be marked afterwards. Just draw your sketch and don't say anything. You better have this marked and then he can refer to it.

Mr. Ely: I object to this whole procedure, Your Honor. It is entirely unnecessary, and certainly it is hearsay, and Dr. Smith was on the stand. He was here and he isn't here now.

The Court: He is undertaking to explain something there to the Court.

Mr. Williamson: That is all there is to it, Your Honor. The sketch produced by the witness is offered in evidence to be marked Defendant's Exhibit S.

Mr. Ely: Object to that, Your Honor.

The Court: It will be received.

Q. I want a brief description of the machine with the use of that sketch.

438 The Court: He wants the sketch. Give him the sketch.

(Defendant's Exhibit S marked for identification by the reporter.)

The Court: What you are undertaking to do is to say that you are embodying in this sketch what Mr. Smith's machine is as described by these articles.

Mr. Williamson: No, as described by Smith in his testimony. Smith described his machine as he used it at that time, two years before he applied for his patent, and this is a sketch showing one of the compartments, but he said he used three compartments.

The Court: This is a sketch, you think, which shows that Smith described in his testimony.

Mr. Williamson: Yes, just to help you.

Mr. Ely: I object, Your Honor. I think that should have been done when Dr. Smith was on the stand.

Mr. Williamson: Why didn't you ask him to do it?

Mr. Ely: Your Honor, it cannot be that is proving this so-called public use?

The Court: Well, gentlemen, I have let it in. I have already passed on that.

Mr. Ely: I want to object to any testimony in regard to the sketch, too, Your Honor, as entirely improper.

The Court: I will overrule the objection.

Mr. Ely: Note an exception.

439 A. This is my understanding, substantially, of the machine, from Smith's description on the stand. I understood him to say that there was, I think, three compartments and this is a cross-section, as I understood, of one of those compartments. That is every compartment, as I understood, was equal, would be the equivalent of the separate incubator that we are discussing. Now, in that incubator I understood that he had the trays on each side of the corridor. I think he said it was nine or ten feet wide, I can't remember the exact figures, but it was of that substantial size, and there were egg trays on each side of that central corridor which I have shown in this sketch as number 1. Those egg trays were stacked up in tiers. As I remember it he said he thought there were fourteen tiers high—fourteen trays high in each tier, and I believe he said eight tiers. Of course that would be non-essential as far as the sketch is concerned. The compartment, besides the trays, contained a central corridor at the bottom of which were some heating pipes. At the top of that corridor, central part of the sec-

tion I have, there was an electric fan which I am going to call 2, and he described that fan as driving the air downward over the heating pipes, which I am going to mark as 3, where it spread out and filtered back up through the trays on either side. Now, he described it as having thermostat control and the question of humidity was also described. I am not sure whether he said it had humidity or not, but I don't
440 think that was the question. It was a question of circulation. But this is my understanding of it—

The Court: That is a drawing of what he described in his language?

The Witness: That is in the language, that is the drawing of what he described.

Q. But he referred to three compartments, did he not?
A. He referred to three compartments.
Q. And each room had a fan?
A. Each of them had a fan.
Q. And they were all alike, weren't they, according to his description?
A. Yes, this sketch, as I said, represents one of those three compartments. My interpretation was that those compartments would be separate incubators.

441 By Mr. Williamson:
Q. Now, please pick up that Stulik German Patent again, just for one minute, will you please?
A. (Witness does so.) I have the German Stulik Patent.
Q. Do you recall what Mr. Taggart said about that patent, when I first showed it to him, and asked him whether it showed stage incubation or not?
A. He said that it did not show stage incubation, as I understood it, and there are several questions along that line in there.

Mr. Ely: Well, he did not,—

The Court: Are you making an objection?

Mr. Ely: Oh, I beg your pardon.

The Witness: I want to make my answer clear.

The Court: Well, of course, the record of what Mr. Taggart said is on record.

Mr. Williamson: Yes, that is on record.

The Court: And if he says it is different from what the record shows, he can correct him.

Mr. Williamson: Yes, that is what he said.

By Mr. Williamson:

Q. As a matter of fact, is stage incubation present and disclosed in that patent? A. Yes, sir.

Q. Mr. Taggart, at the same place, and about the same time, stated that there was no utilization of the heat from the eggs in the advanced stage of incubation for heating the eggs in the later stage of incubation; was that correct or wrong?

A. Well, do you mean, is his statement correct or
442 wrong?

Q. Yes.

A. His statement did not take into consideration that radiant heat was radiating down through. It was wrong.

Q. Well, as a matter of fact, in the Stulik patent, the heat from the chick in the advanced stages of incubation is utilized, isn't it?

A. Yes, it is radiated down to those underneath. It is utilized to the extent that there is a difference in temperature between the outlet layers, so it must be radiated downward to the other layers.

Q. Now, Professor Rowley,—

Q. (By the Court—interrupting) You say there is a radiation but they do not carry the air down?

A. No, it is radiant heat.

Q. (By Mr. Williamson) Well, the air has a limited outlet, hasn't it, in this Stulik machine?

A. Yes, sir.

Mr. Ely: That is objected to as immaterial.

Q. (By Mr. Williamson) Well, that Stulik machine shows the utilization of the heat, and the air doesn't all go down at once, does it, and won't the heat from the chicks in the advanced stage of incubation be heating all of the air in the incubator, or more or less so?

Mr. Ely: That is objected to as leading.

The Court: The objection is overruled.

443 Mr. Ely: Exception.

A. Yes.

Q. (By Mr. Williamson) Now, Professor Rowley, you have discussed the disclosure of the Smith Patent in suit, the Smith commercial machine, and so forth; and now you have been over and called the attention of the Court, to such of the prior patents and publications as you see them, relating to the prior art. I will now ask you to state whether or not

there is anything new over the prior art in the method of hatching eggs, as disclosed in the Smith Patent here in suit?

A. No, no.

Mr. Williamson: You may cross-examine.

Cross-Examination.

By Mr. Ely:

Q. Right along that line, Professor Rowley, is there any one patent or publication in the prior art, to which you referred, which shows a combination of stage incubation and the fan impelled draft of air?

Mr. Williamson: That is objected to as immaterial. This is not as to the operation of the patent; the claims are directed to a method; it is not a combination of different elements of the machine, but it is a method, the portion which calls for a sequence of steps, and therefore this question is immaterial.

The Court: The objection is overruled.

Mr. Williamson: Exception.

444 A. Will you read the question again, please, so that I may understand it?

(Previous question read by the reporter.)

A. I cannot say that there is any one patent that would embody all of those. The publications referring to the Smith machine and his testimony, describes a machine with a fan, and the circulation, the same as his present machine that he used without the curtains.

Q. (By Mr. Ely) Then the answer to my question is that there is no patent or publication in the prior art which shows the combination of stage incubation, and the application of a forced fan impelled draft of air?

Mr. Williamson: That question is objected to as immaterial. There is no claim in the patent that reads like that. There is no claim whatever in the patent that reads like that.

The Court: I think I have ruled on that question. The objection is overruled.

Mr. Williamson: Exception.

A. I have not found quoted any or all of those steps in that specific order.

Q. (By Mr. Ely) Then, the answer to that question is that there is not any?

Mr. Williamson: The same objection.

Q. (By the Court) None that you have cited?
A. None that I have cited. I am limiting that, of course, to all those specific cycles complete.

445 By Mr. Ely:
Q. Now, that setting of the eggs, and stage incubation, and the application of a fan impelled draft of air to those eggs is characteristic of the Smith invention, is it not?

Mr. Williamson: That is objected to as immaterial, and it is not true.

The Court: The objection is overruled.

Mr. Williamson: Exception.

A. Will you repeat the question, please?

(Previous question read by the reporter.)

Mr. Williamson: That is objected to as incompetent, this witness not having qualified as a patent expert. He is not a lawyer; he is a mechanical engineer.

The Court: The objection is overruled.

Mr. Williamson: Exception.

A. Well, I should say that the thing that is characteristic of the Smith invention, if anything at all, is setting the eggs in a particular arrangement for stage incubation, and directing the air over those eggs in a column downward, filtering up through the eggs, coming in contact with those in the advanced stage first, for the specific purpose of taking the heat off by convection.

By Mr. Ely:
Q. The Smith Patent shows, does it not, setting the eggs in various stages of incubation in a chamber, and applying a draft of fan impelled air over those eggs. Will you please answer the question yes or no?
446 A. I cannot answer it by yes or no. I will have to make my answer clear. I tried to explain the Smith Patent as I understood it in the specifications and drawings, and it states specifically one way of setting the eggs for stage incubation, and a particular way of applying the air; it describes specifically the curtains on there for directing the air in a column downward, through the corridor, under the eggs in the advanced stage, and filtering up.

Now, the Smith Patent is very clear in describing one particular kind of stage setting of eggs, and one particular

method or way of circulating the air, and for a particular purpose. It is very evident that the Smith Patent did not contemplate taking the heat off from those eggs by radiation. He put in the eggs in such a way, or in a particular manner or use for stage incubation, that he did not get the advantage of radiation; and he specifically stated that, and he showed everything. Now, I have tried to make clear what I understood by the Smith Patent.

Q. Now, without giving us a lecture on the subject, will you please tell me whether the Smith Patent discloses the setting of eggs in various stages of incubation, and the application of a forced draft of air over those eggs?

Mr. Williamson: The witness is instructed that he can answer it in his own way.

The Court: Well, he can answer the question.

Mr. Williamson: Yes, as long as it is responsive to
447 the question.

A. Well, I tried to answer it by stating that the Smith Patent does define a specific arrangement of spaces,—a specific setting of eggs for stage incubation, and a specific circulation of air, and that specific circulation is in a column downward through the corridor, and upward through the eggs. The Smith Patent does not describe the general circulation of air, nor does it describe in its specifications and drawings general stage incubation, excepting by that one particular method.

By Mr. Ely:

Q. The Smith Patent shows the setting of eggs in stage incubation, does it not?

A. It shows the setting of eggs in a method of stage incubation.

Q. Will you please answer my question: The Smith Patent shows the setting of eggs in stage incubation, does it not?

A. It shows a particular but not general method.

Q. Well, showing a particular method, it shows the general as well, does it not?

A. Not only that you can say,—

Mr. Ely (Interrupting): Will you read the question, please, Mr. Reporter?

(Previous question read by the reporter.)

A. No.

By Mr. Ely:

Q. In the Smith Patent, it shows, does it not, the application of a fanned, impelled draft of air through the
448 chamber, does it not?

A. It shows a fan impelled draft through a specific way, but not the general application of the fan impelled air.

Q. Do you find any patent in the prior art that shows a general setting of eggs in stage incubation, and the general application of forced air over those eggs,—is there any patent or publication in the prior art, that shows that?

A. No, no I don't think so.

Q. My last question is also characteristic of the Snow, is it not?

Mr. Williamson: What do you mean by "Snow?"

By Mr. Ely:

Q. The Snow incubator, and the way Snow operates it?

A. Well, Snow operates with a different method of setting his eggs by stage incubation than Smith, and he operates by a different method of circulating or agitating the air than Smith.

Q. Snow has, has he not, the setting of eggs in stage incubation in a chamber?

A. Snow has a different setting of eggs.

Q. Now, I did not say different from anything; I asked you what Snow had?

The Court: Of course, you can answer the question as to whether he has that. Of course, I understand that you claim it is different from the one that they have, but,—do you claim that it is different?

449 A. Yes.

By Mr. Ely:

Q. But Snow has a mechanically applied movement of air over those eggs, has he not?

A. He has a movement of air which is specifically different than the Smith.

Q. Well, I did not ask you whether it was specifically different.

Mr. Williamson: I think that the witness ought to be allowed to answer the question in his own way.

The Court: Well, I should think that he could answer the specific question.

Mr. Williamson: Yes.

A. Well, I would say "Yes," he has a motion of air,—what was the question, please?

(Previous question read.)

A. Yes.

By Mr. Ely:

Q. And you do not find that in the art prior to the Smith Patent, do you,—what Snow does?

A. Well, I certainly do,—about the Smith publication.

Q. No, I said prior to the Smith Patent.

Mr. Williamson: No, you did not; I beg your pardon.

The Court: Well, you mean outside of this disclosure?

Mr. Williamson: Smith's own prior use.

A. The prior use.

Mr. Williamson: Well, let him make his question read so that it is not confusing to the witness. The prior
450 art is one thing, and the Smith Patent is another thing, and the publication is another thing. Let him frame the question so that the witness can intelligently answer it.

By Mr. Ely:

Q. Then, from what you saw, aside from these publications in the two Cleveland papers, you did not find it, is that right?

A. And Smith's testimony.

Q. Well, of course, that is just what you have heard here in the court room, is it?

A. I believe that is correct.

Mr. Williamson: That is what he has got to consider.

By Mr. Ely:

Q. Now, will you please take these prior publications, and show me where you find in these prior publications any mention of stage incubation?

Mr. Williamson: That is objected to as immaterial. Stage incubation is no essential part of the process applied in the Smith Patent.

The Court: The objection is overruled.

Mr. Williamson: Exception.

By Mr. Ely:

Q. Please find me that in these publications?

A. Well, these publications describe the eggs as set in a full compartment at different times; they describe full setting in each compartment,—three compartments; of course, alternating the eggs.

Q. Yes, that is to say, these publications do not show
451 stage incubation?

A. Excepting by compartments they show stage incubation.

Q. Well, in separate compartments, but it does not show the placing of eggs of various ages of incubation in one compartment, does it?

Mr. Williamson: Now, I object to the question; it does not make a proper distinction between the different publications, or the publication taken from Ure's Dictionary of America. He is asking him about stage incubation without any distinction at all. If he will identify the publications that were referred to in the question, then the witness could intelligently answer it. Otherwise, I don't see how anybody could answer it.

By Mr. Ely:

Q. You understood my question; I was referring to those two publications in the Cleveland papers,—did you not?

A. Certainly, the Cleveland publications, I understood.

Q. All right. Now, will you go ahead and answer my question?

A. I thought I did answer that question on that basis.

Q. I don't think you did. I think Mr. Williamson interrupted you. Did he answer that question?

The Court: I don't think so.

(Previous question read by the reporter.)

A. The question, then, refers specifically to these Cleveland papers?

452 Q. Yes.

A. And the answer is, that they do not show stage incubation in each compartment.

By Mr. Ely:

Q. And you heard Dr. Smith's testimony, did you not?

A. Yes, sir.

Q. And you heard Dr. Smith testify that in 1913 and 1914, he did not have stage incubation, did you not?

A. Yes, I think he testified to that; I heard that.

Q. Now, if you put 33,000 eggs in one room at one time, what would be your heat conditions on the 20th day?

A. Well, I would have to figure that up; it would be pretty hot.

Q. It would be pretty hot, wouldn't it?

A. Yes, sir; that is a lot of heat.

Q. And when you put them in, it would require a lot of heat, wouldn't it?

A. Well, it would require enough to heat the eggs up, to bring them up to temperature with the evaporation.

Q. Then, when you had them in the endothermic condition, in the first period, you would have to supply a large amount of heat?

A. Well, you would have to supply enough heat to bring the temperature up to the hatching temperature; it would depend on what you started these eggs out with,—that is, the temperature.

453 Q. And then,when you get over to the exothermic condition, and you get about to the twentieth day (Mr. Ely looking at record), how many British thermal units would each egg be giving off?

(Chart submitted to the witness.)

A. According to this chart, there would be given off four large calories, or about sixteen,—

Mr. Williamson: (interrupting) What chart are you using?

The Witness: Plaintiff's Exhibit 2.

A. (continuing) —of about sixteen British thermal units.

By Mr. Ely:

Q. What is the best or the closest approximation to the Smith invention in the prior art or publications to which you have referred?

Mr. Williamson: Now, if Your Honor please, he is using the word "invention" there again. That means that he is calling on this witness to interpret that claim, and we object to the interpretation.

Mr. Ely: I will change that to method.

The Court: Yes, say method.

Mr. Ely: Yes, method; I am sorry; I did not mean to say that.

Mr. Williamson: The method of hatching eggs, or something of that kind.

Mr. Ely: All right.

Mr. Ely: When you are making remarks, will you
454 please not speak so loud?

(Previous question read by the reporter.)

Mr. Ely: Make it read "method," instead of invention.

Mr. Williamson: I would like to know whether prior usage is also included in that question.

Mr. Ely: You can include prior usage, if you want to.

The Witness: You asked me, which is the closest?

By Mr. Ely:

Q. Yes.

A. Well, it is very difficult to pick out any one that is specifically the closest, because your stage incubation, of course, is shown in the usage and in the patent,—the stage incubation is shown in the prior patents, and also in the publications on incubators; and the fan is shown in the prior use.

Now, it is very difficult to say which of these is the closest, because you are comparing those things and I don't know how to,—

Q. (interrupting) That is, your difficulty arises from the fact that you have not got any one patent or publication which shows that they have, isn't that the trouble.

A. You have got all of the stage incubation.

By the Court:

Q. You have got the fan in one, and you have got the stage incubation in another, and you cannot make a comparison as to which is the closest?

455 A. No; you cannot say definitely which is the closest, that I can see.

By Mr. Ely:

Q. Now, what patents of the prior art show stage incubation,—I have here Stulik, Zimmer, Winkler, and Ure's dictionary,—that is complete?

A. Well, I will have to check those through; I think that is the proper way to do it.

Mr. Williamson: If Your Honor please, the witness did not pick out and explain to Your Honor all of the patents that we set up and introduced, and so, perhaps, it is difficult

for him to answer that question. If he is asked about those that he specified, I suppose he could readily answer the question.

Mr. Ely: I will include that in the question.

The Witness: I think those are the ones that I have specified.

Mr. Williamson: The ones that you specified.

The Witness: The ones that I specified; I think there were four of them.

By Mr. Ely:

Q. Now, will you look for the Stulik Patent and look at that, please?

A. (Witness does so.)

Q. Now, as I understand the Stulik Patent,—and, please correct me if I am wrong,—it shows a sort of a tower, in which there are a number of egg trays; that is right, isn't it?

A. I don't know that you would call it a tower,—
456 which is more accurate. Of course, the relative size is not necessarily shown in this figure; I would not call that a tower.

Q. All right. A cabinet which is higher than it is wide,—we will put it that way,—in which there are a number of egg trays, that is right, isn't it?

A. Yes, sir.

Q. And you apply the heat, the hot air, from the bottom, at "C,"—at the small tube "C," that is right, isn't it?

A. Well, you cannot say that that is the application of the heat; that is the air going into the incubator. The heat, of course, is applied around the outside.

Q. All right. That is where the air goes into the incubator, through that pipe "C?" A. Yes, sir.

Q. And that is at the bottom of the incubator, in the cabinet, isn't it? A. Yes, sir.

Q. And the air goes out at the top, through that pipe "D," that is right, isn't it? A. Yes, sir.

Q. And in the operation of the incubator, as described in the patent, you put your fresh eggs in at the bottom, that is right, isn't it? A. Yes, sir.

Q. And then when you get ready to put the next set in, you move it up, and put the fresh set underneath, that is right, isn't it?

457 A. Yes, sir.

Q. And so on, until you get the cabinet full?

A. Yes, sir.

Q. And then, when you get the cabinet full, you have got fresh or new eggs at the bottom, and the old eggs at the top, that is right, isn't it? A. Yes, sir.

Q. And the eggs that are at the bottom are endothermic, that is, they have to have heat applied to them, that is right, isn't it?

A. It depends on how far they are along,—at what time they are new eggs.

Q. Well, I am assuming that we have the compartment full of eggs at all stages of incubation? A. Yes, sir.

Q. Now, the purpose of that patent, as I read it, is to apply the hot air to the lower eggs, because they require more heat, isn't that right?

A. Well, that is stated in a part of the specification here, I think. It is also stated that it uses heat in the more advanced stage.

By the Court:

Q. Well, as a matter of fact, that is the way they do it?

A. They do it, as he has described it, that is correct, yes.

By Mr Ely:

Q. And then, the hot air from the hottest eggs, being 458 at the top, will escape out through the pipe "D," won't it?

A. You mean the warm air or the hot air going through up to "D?"

Q. I am saying that the hot air that is generated by the heat at the top, rises, as all hot air rises? A. Yes.

Q. And it passes out through the opening "D?"

A. Yes; that is, when that opening "D" is open, of course; it might be closed. If that is the fact,—

Q. (interrupting) Well, you don't find any instructions in the patent about closing that opening, do you?

A. No, there is a thermostat control there.

Q. You do not find anything about closing that opening, do you? A. (No answer.)

Mr. Williamson: Take your time in looking that up, if you want to.

A. (Witness looking at record) No, I don't find that that thermostat regulates that; it states about regulating the heat.

By Mr. Ely:

Q. Now, as a matter of fact, the way the Stulik machine operates is to apply heat to all the eggs, but to the eggs

in the earlier stages of incubation to a greater extent than those in the later stages, that is right, isn't it?

A. Yes. The heat is applied to all of the eggs in the
459 Stulik Patent. Now, you must distinguish in here the methods in which they are applying the heat. You see, the heat is applied in the Stulik Patent by two methods: First, you have got a water jacket around the sides, and, second, you have got the air which comes up through pipe "C".

Of course, you must distinguish whether that heat is heating the air or cooling the air; it may be either. Your question implies that that was hot air, of course,—that that was hot air coming up through the pipe.

Q. Well, I will read you the translation of the claim, that I have here, which was a translation which was used in the Cooley case.

Mr. Williamson: Is that a claim of Stulik?

Mr. Ely: A claim in the Stulik Patent.

Q. (continuing) "Hatching process with entering of the eggs in batches and simultaneous treatment of the different batches of the eggs introduced into the incubator at different times, characterized in that the batches of eggs introduced into the hatching space at different times are exposed directly to the same hot air current in the manner that the batches of eggs, in different stages are arranged in the direction of the hot air current at a gradually increasing distance from the source of heat, in which connection the hot air current passes first over the batch of eggs freshly introduced into the hatching space and consecutively the older batches of eggs imparting to the individual batches of eggs such an
460 amount of heat as is required, taking into due consideration the natural heat of the eggs which differs at the various periods of time so that in the entire hatching space a uniform temperature prevails."

Now, that is correct, is it not?

A. I don't know.

Mr. Williamson: Just a minute. I object to that question on the ground that it is incompetent. Counsel has submitted a claim there which defines the issues involved in the Stulik Patent, under the German Patent, and the disclosure of the patent depends upon written specifications, on the descriptive part of the specifications, and the drawings. This witness has not qualified as a patent expert, and it is entirely

improper to ask him to treat that disclosure as if it all depended upon the patent claim. If he had coupled the claim with a description of the drawing, I would have no objection to the question.

Mr. Ely: I think you asked him about this claim yourself.

Mr. Williamson: No, I did not.

The Court: The objection is overruled.

Mr. Williamson: Exception.

By Mr. Ely:

Q. Is that a correct statement of the way that works?

A. Well, I would have to study it a little more; I cannot answer that kind of a question right offhand.

461 Q. All right, here is the statement. (Document submitted to the witness.)

Mr. Williamson: Now, this witness can hardly be called upon to read this whole record in another suit, Your Honor.

Mr. Ely: I am not asking him to do that.

The Court: Gentlemen, I am going to allow counsel to cross-examine this witness, and if there is any specific objection that you have, why, I will hear it, but I cannot say that he cannot read that, in order to answer the question.

Mr. Williamson: No, but my objection was that he is asking him to give an opinion on a claim instead of a disclosure of the patent.

The Court: Well, he has undertaken to tell me what that patent means, and explain it to me. Now, he is under cross-examination, and is endeavoring to show by him whether or not he has explained it right to me. The objection is overruled.

Mr. Williamson: All right. Exception.

A. I would like to have a little time to read this over, Your Honor.

The Court: We will take a recess at this time.

(Recess.)

---

462 Mr. Williamson: Before the witness answers the question last put to him, I ask Your Honor's permission to substitute for the document that was put in his hands by Mr. Ely, the official translation of that Stulik Patent made

by the official translator of the U. S. Patent Office, the certified copy of which is in evidence.

Mr. Ely: I have no objection. Perhaps I better reframe the question. I did not have this official translation, Your Honor. Let it be noted that the last question is withdrawn, and I will ask another question.

Mr. Williamson: It is the official translation used in the Stulik case.

By Mr. Ely:

Q. Now, Mr. Rowley, in the Stulik Patent, the current of air is a convection current arising through the machine, is it not? A. Yes.

Q. That is the only current of air which would arise and which is described there?

A. That is the only one unless you add eddy currents inside.

Q. But it is a convection current, is it not, which starts at the bottom and rises up through the incubator?

A. Yes, you can call it a convection or gravity current.

Q. It rises by the fact that it is a heated current applied at the bottom? A. Yes.

463 Q. As it comes up, it first strikes the coldest eggs, doesn't it? A. Yes.

Q. Then passes on to hotter eggs? A. Yes.

Q. Then on to still hotter eggs? A. Yes.

Q. So that any heat picked up midway in the column of hot eggs would be carried by that current to still hotter eggs, wouldn't it?

A. Literally speaking, yes. I would like to explain that it may not pick up heat. It may give the heat to those eggs. If it passes up through, it may not pick up heat from those eggs; it may give them heat.

Q. That is when the eggs are hotter than the current, or each batch of eggs that is hotter will give off heat to that current of air? A. Yes.

Q. Assuming, for the purpose of answering my question, that that air is about 99 or 100, it will pick up heat units from hot eggs and carry those heat units to still hotter eggs, will it not?

A. Well, it depends upon whether you mean by hot eggs, hotter than the air, or not. You assumed the air was 99 degrees, did you not?

Q. Or hotter.

464 A. When you speak of that as coming in contact with hot eggs, it depends upon how hot those eggs are.

Q. Let me put the question this way: If there are any heat units picked up by that current of air in the eggs in some intermediate stage of incubation, those heat units will be carried by that current of air to eggs which are still hotter, isn't that true?

A. Well, it will be carried past those,—if that current of air comes in contact going up there, with hot eggs, and picks up heat, then that heat will be carried right on up the next layer. It will not take up the heat from that air.

Mr. Williamson: I don't think your answer was completely gotten down.

The Witness: It will carry it past them. They are hotter and they will give their heat up to the air. In order for the heat from this air to pass into the upper eggs, the air temperature must be hotter than those eggs in that upper layer.

Q. Then, I take it, from this Stulik Patent, there will not be any heat units transferred from hot eggs to cold eggs by the current of air.

A. I want to make it clear. I think your question was that the current of air,—read me the question, will you?

(Last question read by the reporter.)

A. No, that is going in the opposite direction.

Q. That current of hot air will pass out at the top of
465 the machine without ever reaching the cold eggs at the bottom, is that right?

A. Yes, after it passes them, of course.

Q. Now, then, as I understand it, the cold eggs do not get any benefit of the heat from the hot eggs, in Stulik's, by the current movement of air.

Mr. Williamson: That is objected to as a repetition.

The Witness: I think that is the one I answered, but I want it clear, that this radiated heat may be up or down,—don't mix those two up.

Q. In that question I was speaking about heat being carried by a current of air? A. Yes.

Q. In regard to radiant heat, you say that the old eggs will get some radiant heat, and the fresh eggs will get some radiant heat from the old eggs?

A. The eggs there below in the lower tiers, with warmer eggs above, will receive some heat from those warmer eggs above by radiation.

Q. Radiation of heat hasn't anything to do with the current movement of air, has it,—it is a separate way of heat radiation, the movement?

A. Yes, radiation is a separate movement.

Q. Radiation does not depend upon direction?

A. Well, I don't know as I understand your question.

466 Q. Heat radiates from a hot body in all directions?

A. It radiates directly off from the body.

Q. In all directions? A. From the exposed surface.

Q. It doesn't make any difference what side of an object you want to heat by radiation,—it gets the radiation just the same?

A. If I understand your question properly, if there are two surfaces, one of them hot and one of them colder, and they are adjacent to each other, or separated, it will radiate from one to the other.

Q. It radiates up and it radiates down?

A. If the heated surface is also on the upward and downward side, it will radiate directly from that surface.

Q. I say the radiation you have been claiming for Stulik, the radiation from hot eggs is downward in this cabinet, is it not? A. Yes.

Q. Would it make any difference to that radiated heat if that thing was operated upside down, radiated heat?

A. No, it would be radiated from the warmer eggs to the colder eggs, just the same.

Q. Whether it was up this way, right side up, or whether it was upside down?

A. That is true. Your question is, it would either way, but the point of the difference between that which I

467 want to explain, if I may, and the method where the eggs are standing in different stages, is the degree of radiation. In this arrangement,—

Q. I am afraid you are trying to go ahead and answer more than my question called for.

Mr. Williamson: I ask that the Court give the witness permission to answer the question.

The Court: I do not think he was answering the question. He is asking concerning that particular thing, and not a general argument.

A. I will say yes, either way.

Q. Then the arrangement I have here, with this upside down, is the specific arrangement shown in the Smith Patent, with the eggs over there along at the bottom, isn't it?

A. It is in regard to the stage, excepting that in here you have only eight trays, whereas in the Smith you have more trays, more divisions in your heat line.

Q. That is to say, Smith possibly adds four trays to this?

A. Yes, it has more steps in the process.

Q. Wouldn't you get in Smith the same radiation as you get in Stulik?

A. The questions are confusing somewhat. I will have to make clear my answer. Your questions that you have been putting to me now were strictly on the radiating heat from that upper layer downward in Stulik, or, if you reverse it, from the lower layer upward. That is true the
468 way you have stated it, but, to complete the process in the Smith arrangement, if we assume a tray of eggs in any stage, we will say the twentieth day, for illustration, now, that tray of eggs will, of course, be radiating a little heat upward to the next lower stage, but, at the same time, it will be receiving heat from the stage below it, so you see, so far as the egg itself is concerned, while radiation will be going on, the egg will be receiving and giving off radiant heat at the same time,—giving off a small portion of it at the upper part, and taking on a small portion at the lower part. The balance depends upon which happens to be greater, and that can only be gotten from the temperature.

Q. That is to say, so far as radiating heat is concerned, it would not make any difference in Stulik, whether this was upright, as shown, or whether it was the reverse?

A. Between the trays, it would be the same; that is, the trays would radiate either way, up or down.

Q. In Smith, the trays are arranged in the reverse order from Stulik, is that right? A. Yes.

Q. Let us go on to the Zimmer Patent, please? Will you take the Zimmer Patent, please? In Zimmer you have a chamber here, a sort of a cylindrical chamber, don't you, which is closed, except for an outlet opening at the top 13?

A. It is closed, but it states in the specifications that automatic ventilation is also claimed, so there must
469 be an inlet at the bottom.

Q. Where is that inlet?

A. It is on page two, line 31. It says: "Moreover, the incubating chamber is automatically ventilated."

Q. You do not see anything to automatically ventilate it except that opening at the top?

A. If there is a passage for the air going out, it must be assumed the air must get into the incubator, and it is stated in the specifications that it is automatically ventilated.

Q. That is to say, you do not see anything described in the specifications for securing that automatic heat ventilation, except that opening at the top?

A. It states here, in line 31, page two: "Moreover, the incubating chamber is automatically ventilated, as will be understood."

Q. That refers to that automatic operation of the lid 13, doesn't it?

A. It doesn't state that. It simply states that you understand that it is ventilated.

The Court: Does he point out where it is ventilated, except at 13?

The Witness: I don't know that the patent is specifically clear upon that. Some of these patent drawings are not,—just a minute, let me check that over. There is an opening on Figure 4 from the chick chamber there, 35, and 36,
470 the cover. I will have to see if I can find that here. It says there that that opening is provided with a nursery, on page three, line 33, straight down, it says: "I also provide a nursery 34 for the newly hatched chickens. This nursery is on one side of the incubator directly in contact therewith, and is reached by the chicks through an opening 35, with which the incubator is provided, there being a slide 36 to cover this opening when desired." Of course, that opens directly into the incubator, and has a slide, which is described, to cover it when desired. It also states that ventilation is provided, so I assume that must be the opening into the incubator.

Q. That is the only thing that you can find there that might apply there?

A. That is all I can find right now, without looking closer into the patent.

Q. As a matter of fact, that is all there is?

Mr. Williamson: He has already answered it.

The Court: If anybody can find it, the record so shows.

Q. When you operate this Zimmer incubator, if I understand the operation correctly, as I go along, you first put your,—your incubator is warm?

A. Yes.

Q. Then you put in a layer of eggs in a tray at the bottom? A. Yes.

471 Q. And then the second day you take out that layer of eggs, and you put in another layer of eggs at the bottom, is that right? A. Yes.

Q. Then you put this feather mat over the top of that tray of eggs that you just put in? A. Yes.

Q. That feather mat, as shown in Figure 1, is somewhat thicker than the thickness of the egg as it is shown there, isn't it,—thicker than the short diameter of the egg?

A. The distance between there is,—I don't know how much of that is tray, and how much is mat.

Q. But the tray is open at the top, and that feather mat is supported on top of the eggs, isn't it? A. Yes.

Q. Then you put your layer of eggs which you just took out of the incubator back on top of that feather mat?

A. Yes.

Q. And so the weight of that second layer of eggs rests on the top of the first layer of eggs, that is right, isn't it?

A. Yes.

Q. Then you go on, and on the second day you take out two layers of eggs, and you put another tray of eggs in, isn't that right? A. Yes.

472 Q. Then you put on another feather mat?

A. Yes.

Q. Then you put the two trays that you have taken out back in again? A. Yes.

Q. All this time heat is being applied? A. Yes.

Q. Then you keep on until you have got ten trays of eggs in that machine, don't you? A. Yes.

Q. Every day you have taken out these eggs and put in a new tray at the bottom, you put the stack back on again?

A. Yes.

A. At the tenth day, the lowermost tray was supporting the weight of the nine layers of eggs, and the nine mats, and the nine trays, that is right, isn't it? A. Yes.

Q. Now, during that time those eggs are endothermic?

A. I am not sure they are all the way; I think towards the end of the period they are exothermic. This curve shows practically between the third and fourth days they begin to be exothermic.

Q. You heard Mr. Taggart state that the division point between the two is about halfway through the process?

Mr. Williamson: That is objected to as immaterial. Mr. Taggart is not reliable.

473 Q. Do you dispute that?

A. I am going by the curve here, which shows the change about four or five days, when it begins to be exothermic.

Q. Never mind. It is not important. You have got your ten layers of eggs in there separated by these thick

feather mats. Is there any propulsion of the air through there?

A. The only propulsion of air is by convection in gravity.

Q. Through that small opening at the bottom 35, and out through the opening at the top, if that thing is open?

A. That is correct.

Q. How much air is getting to the eggs in the middle of that stack?

A. That is a pretty difficult thing to say, because you cannot tell how dense that feather mat is, nor the possibility for infiltration of the air.

Q. It is just too bad for the embryo that happens to be in the middle of that stack, isn't it, so far as getting air is concerned,—he will suffocate in there?

Mr. Williamson: What is the question?

The Court: He says, would it be too bad for the egg in the middle of that stack, and whether it would get sufficient air.

A. I will not say it could not get sufficient air. It depends upon how dense those feather mats are. I couldn't state; I couldn't answer that.

474 Q. After you have got your ten days stacked up, you let it set for two more days, and then it is twelve days? A. Yes.

Q. Then you have got to take those ten trays out and you reverse them and put them back in the reverse order, don't you? A. According to this description, yes.

Q. So that the furthermost advanced eggs are at the bottom? A. Yes.

Q. And you let it stay in there for nine more days, don't you?

A. Yes, I believe so, finish up the period.

Q. During those nine days, assuming that the embryos are all alive, those eggs are getting hotter and hotter, aren't they?

A. They are generating more and more heat. I cannot say they are getting hotter and hotter. It depends upon how much air you have in below.

Q. You haven't seen any way of letting in more air except through that hole?

A. No, but the relative size of that small hole can be taken from the scale here. That is supposedly big enough to supply ventilation.

Q. You have got a lot of eggs in there, and they are all pretty hot. You carry along for nine days. Now, you are

ready to hatch your first eggs, assuming that the chicks are still alive, you are ready to hatch the eggs?

A. Yes.

475 Q. You have got to take that whole stack out again?

A. Yes.

Q. You put some props down there, and then you leave the eggs in underneath so they will hatch, is that right?

A. Yes.

Q. The weight of those eggs that is on top of the bottom layer of eggs, it says it flattens out the eggs. You read that part in the specifications, didn't you? A. Yes.

Q. That is too bad for the embryo in there, too, isn't it?

A. I don't know how much, that may be true,—I don't know whether it flattens those eggs out or not.

Q. That is what the patent says?

A. That does not change the principle of incubation. The patent says that.

Q. The patent says it flattens the eggs out, and he says the shells get brittle, doesn't he?

A. He states that, or something to that effect.

Q. So that the eggs can be squashed or squeezed down, as that right?

A. I don't know that you can squeeze them down just because they are brittle.

Q. The patent says so, doesn't it?

Mr. Williamson: The witness is instructed that he may refer to the patent every time such a question is put to him, if he wants to.

476 The Witness: There is something in here about the weight, but I don't know about that particular statement. I would have to hunt it up.

Q. Do you think that will work?

A. Well, what part of the process?

Q. The whole thing. Do you think you will get any chicks out of that thing?

A. There is no reason, if you keep your temperature controlled in there, if you want to go through that process.

Q. But you have no means of keeping your temperature controlled, have you?

A. You have got air coming up through.

477 Q. It is the air through convection currents?

A. The air through these mats,—we don't know what the porosity of those mats was.

Q. Your eggs are lying between two feather beds, one on each side? A. They are feathered mats.

Q. Feathered mats or feathered beds.

Mr. Williamson: Chickens have feathers.

Mr. Ely: In the embryo?

Q. There isn't any forced draft in that patent?
A. The draft in there is gravity,—controlled by gravity.
Q. Did you ever know whether this Zimmer machine operated? Did you ever find out whether anybody worked this machine? A. No, I haven't.
Q. It is a sort of a fireless cooker, isn't it?
A. No, I wouldn't call it that. A fireless cooker does not ventilate or cook off. That is for a different purpose.
Q. Is that the best reference that you have for such incubation?
A. As I stated before, I cannot say what the best reference is. That is pretty hard to say that with reference to a particular reference.
Q. Now, let us see, the Winkler patent you referred to showing staged incubation? A. Yes, I referred to that.

478 Q. Now, as I understand that patent, and correct me if I am wrong, the chicken eggs are put in, looking at Figure 2 of the patent,—

The Court: I do not believe I have before me that Winkler patent.

Mr. Ely: This is the one, Your Honor.

Q. In looking at Figure 2 there, the opening in which the hen eggs are supposed to be placed, is the opening d-2, is it not? A. Yes, the back.

Mr. Williamson: d-2.

Mr. Ely: Yes.

Q. Then they are put on that conveyor and dragged over the inclined surface and then they come around the sprocket B, and drop down onto the next layer and then down over the sprocket d-5, onto the next one, and then on out. Is that right? A. That is substantially what they do.

The Court: Don't they go up here first?

Mr. Ely: No, they come down here.

The Witness: That upper one is for ducks, or for a longer period.

Q. Now, you do not find any forced draft in that machine, do you?
A. No, there is nothing but the convection currents.

Q. Each run of that conveyor is separated from the run in above it by a curved water pan that goes all the
479 way across the machine, isn't it?

A. It is separated in a part of the machine. Those pans do not run from front to back.

Q. Except at the sprockets, that is true, isn't it?

A. Yes.

Q. Does that operate at even temperature?

A. Well, it operates by the temperature,—the hot water temperature which is circulated through the heating trays.

Q. That is, each separate run of that conveyor is heated at a different temperature, isn't it?

A. The same water, of course, circulates, but, as it comes down naturally it cools. It is gravity circulation.

Q. So that heat is applied to the eggs in three or four runs of that conveyor, isn't it?

A. Yes, if I understand your question, that is correct.

Q. The patent says that the temperature is varied in those various tiers or sections of that incubator, is that right? A. Can you refer me to the place?

Q. I will refer you to page 1 on line 20. A. Yes.

Q. That is, you do not have an even temperature through the incubator, which is characteristic of an incubator where there is a forced current or movement of air through the incubator, do you, you do not have that even temperature?

A. You have it regulated by the water. You do not have the forced air circulation, no.

480 Q. You never saw a machine like this in operation, did you? A. No.

Q. Where you put in eggs at one end and chickens come out the other? A. No.

Q. You never saw such an incubator as that, did you?

A. No.

Q. Now the other one I think you referred to was Ure's Dictionary. Let us look at that. A. I have the book.

Q. Except that Ure says that you put in one-twentieth of the eggs at one time, he does not give you any directions as to where you should place those eggs, does he?

A. No, I don't think there is any there.

Q. There isn't anything said about moving the eggs at any time, is there,—so far as this goes, the eggs set in the same place in which you put them? A. That is right.

Q. This is a closed cabinet?

A. Yes, substantially closed.

Q. No means for circulating the air except by such convection current as might arise out of it, are there?

A. There is no opening there that I see on the cabinet.
Q. Well, that is not the question I asked.

(Last question read by the reporter.)

A. You apply that simply to the circulation in the cabinet?

481 Q. Yes. A. Yes.

Q. Those eggs are illustrated as reposing on shelves across that machine, aren't they? A. Yes.

Q. Or trays? A. Yes.

Q. You will recall that in another set of drawings of Ure's that were cited in the case, those were referred to as shelves instead of trays. A. I don't recall that.

Q. There is another citation you raised from Knight's Mechanical Dictionary. Do you recall that?

Mr. Williamson: He did not look at that.

The Witness: I did not see that.

Mr. Williamson: That is not in Ure's. That is in Knight's.

Mr. Ralph Williamson: That has been withdrawn.

Mr. Williamson: We do not rely on that. I rely on Ure's. It should have been that book, there was a reference to Knight's Mechanical Dictionary which also had a small cut of this same structure, but, in response to the order to show cause, we took that out.

482 Mr. Ely: All right.

Q. In this machine the heat is supplied by water which passes through from this heater R and goes up to the top of the cabinet, and then goes in a serpentine path back and forth between the several layers of eggs. That is right, isn't it?

Mr. Williamson: No, between the trays, not the eggs.

The Court: The water first enters at the top, doesn't it?

The Witness: Yes.

The Court: By these various pipes. It goes along there.

Q. The water goes in a serpentine path through these pipes between the various layers of eggs? A. Yes.

Q. You understand that in such a circulating system, the water will always be hotter at the top, and gradually cools off as it goes down?

A. Yes. That, of course, depends upon friction in the pipes. If you have large free circulating pipes, the drop in temperature is very low or small.

Q. Suppose we put some eggs in on the top layer,—on the top tray, and there being nothing there to move those eggs, those eggs would be subjected to the same temperature during the entire period of incubation, wouldn't they?

483 A. Unless you change your water temperature, of course,—you must change your water temperature. You referred to this as a patent. You mean a publication?

Q. Yes. If you change your temperature of the water, you would affect the eggs that were in the lower trays, that had been put in in the meantime?

A. It doesn't state in here how they are set in what stages at all, and they may be partly set on each stage. That may be provided for in this method.

Q. You are assuming that?

A. I have got to assume there might be a way here. I cannot assume the most disadvantageous way.

Q. In setting an egg in there, it stays in the position in which you put it?

A. So far as I know. There may be other methods. This is not a complete, detailed description of the method of setting the eggs, except it states one-twentieth of the whole number is set, and so on by stages, but it does not state specifically what particular trays are set at different times.

Q. Of course, you understand, in order to anticipate, the description must be in the publication, don't you?

Mr. Williamson: That is objected to as incompetent. This witness is not a lawyer.

The Court: Well, I will assume it must be in the publication. I am assuming to constitute anticipation, it must state the things that it anticipates.

Mr. Williamson: Exactly, but that is not the question that was put to him.

484 Q. Now, having put some eggs in that so-called incubator, they will be subjected to heat at the same point in the circulation of the water during the whole period, won't they?

A. Well, as I have stated it depends on how you control the water temperature in the period, of course.

The Court: You can heat up the water more or less.

The Witness: Yes, you can change the temperature.

The Court: If you run it at an even temperature, why it will be hotter above and cooler below.

The Witness: If you run it at an even temperature, and wouldn't take any advantage of the incubating heat of the eggs, if you didn't distribute the eggs properly, yes.

Q. Well, then your eggs, when they get hot in the latter stages of incubation, are still subjected to the same temperature of water provided you did not change your heat of the water in the meantime, that is right, isn't it?

A. If you didn't make any changes then you would have the same heat of the water.

Q. If you didn't make any change in the heat of the water, you would have your eggs, when they were in the later stages of incubation and when they were giving off this heat, you would have them subjected to the same heat, wouldn't you, as you had at the first when they were cool?

A. If you didn't change your temperature, yes.

Q. Yes, if you didn't change your temperature.

485 A. Change your temperature of water.

Q. There is nothing in the publication about changing the temperature of the water during the progress of incubation, is there?

A. Well, it says, up in page 652, the second paragraph under 2, describing the machine, of a regulator calculated to maintain an equitable temperature.

The Court: Well, as a matter of fact in this machine, wouldn't you have a very hard time regulating the water so as to keep the eggs at an even temperature?

The Witness: No, not if you wanted to control the temperature of the water. It is very easy to control the water temperature. That could be very easily done if you stacked your eggs in there.

Q. That being true, and if this did contemplate lowering the temperature of the water as incubation progressed, what is going to happen to the eggs that you put in on the 20th day?

A. If you lower the temperature for the others, it is understood then that the staged incubation could be so arranged that you take advantage of the heat of those eggs in the advanced stage for those later ones.

The Court: How could you do that in that machine?

The Witness: You might stick them all underneath—together on the same trays together, take your eggs and change them around. It says, staged incubation, but it doesn't define the specific method.

486 The Court: It doesn't tell you how to do it.

The Witness: No, you could do it, of course. It doesn't tell the specific details.

The Court: You think heat could do it?

The Witness: Control those?

The Court: So as to give them the right heat at the right time.

The Witness: I could if I could change the eggs around and control the water temperature.

The Court: It would take a great deal of work to do that.

The Witness: That is true with a good many of these water heaters. You have to study the problem and get the right sequence.

Q. The minute you cool that water for the hot eggs so as to adapt that water for the hot eggs, you have brought it down to a temperature where it won't apply as far as the other eggs are concerned, isn't that right?

A. If you keep the temperature in that chamber properly regulated, if you mix the eggs, I can't say that you are right on that.

Q. You mean to say that your temperature requirements, you have got to balance and lower your eggs carefully with respect to their age and also with respect to the temperature of the circulating water.

A. Well, yes, you have got those two means of con-
487 trol that is in the open and you will have to work that out.

Q. You don't find any way of working that out described in this publication?

A. No, it isn't described as to how you set your eggs in there. It says that they are set in stages, but it doesn't describe the details.

Q. That is, this publication leaves a lot to be done yet before you can hatch eggs successfully, is that right?

A. The publication states it has been used successfully, so it must have been properly regulated or they couldn't have used it.

Q. The publication leaves much to be done in order to get chicks out of there, and hatch eggs successfully and get chicks doesn't it?

A. Well, of course that is true with any incubator, a man must know how to operate it. He has got to be experienced in that particular incubator.

Q. That isn't my question. I asked you if the publication didn't leave much to be done?

The Court: It doesn't tell you how to do it.

The Witness: No, it doesn't tell you how to do it.

Mr. Williamson: All these patents and publications have to be interpreted with ordinary common sense.

The Court: The question is, with ordinary common sense, with this one, you could?

Mr. Williamson: It certainly would.

488 Q. As far as you know this publication says this was used at the time of the French Revolution. You don't know that it has been used since, do you? A. No.

Mr. Williamson: That is immaterial.

Q. Now, in this Ure's publication, the top of this chamber is going to be hotter than the bottom, isn't it? The hot air is going to rise to the top of the chamber?

A. The hot air?

Q. Yes.

A. Yes, but of course it depends on how you—that is true. It depends on how you place your eggs in there. The eggs will have something to do with it, but just from the water it will be hotter.

Q. That is left to the imagination or discovery, isn't it?

A. Well, I wouldn't say imagination any more than any of it.

(Preceding answer is read by the reporter.)

The Court: Just a moment. He was asking the reporter to read him something and of course if two or three are talking the reporter can't do anything.

Mr. Williamson: I wasn't talking.

The Court: No, but the witness was.

Mr. Williamson: The witness said something. I don't know as it was recorded.

The Witness: I want the answer clear.

Q. Go ahead.

A. I understood you, there was certain things left to
489 the imagination. My answer was there was certain things we had been discussing here right along, a question of interpretation and regulation.

Q. I understood you to say that you had seen the file wrapper of the Smith patent, that is right, isn't it?

A. Yes, I have seen the file wrapper.

Q. You are aware of the fact, are you not, that the Stulik and Winkler patents were both cited in the patent office and the application allowed over them?

A. They were both cited.

Q. And the patent allowed over them, that is right, isn't it? A. Well—

Q. That is, they were cited by the examiner during the prosecution of the case?

A. There are certain patents cited—

Mr. Williamson: I object to this question as incompetent, Your Honor. This witness does not qualify here as a patent expert or lawyer.

The Court: Why did you ask him whether he had seen the file wrapper?

Mr. Williamson: So as to find out whether he had inspected these patents that were cited. I am perfectly willing they should examine him.

The Court: The objection is overruled.

Mr. Ralph Williamson: I would like to instruct the wit-
ness that he may examine the file wrapper record be-
490 fore he answers the question.

(Question read by the reporter.)

A. Yes, I think they were, without looking at it.

The Court: Gentlemen, the file wrapper will show itself, and you can afterwards in arguing this case, point out that which the file wrapper shows.

Mr. Wiliamson: Yes, but it will take a long time to do it, Your Honor.

The Court: Yes, but it won't take as long as it would to ask the witness.

Mr. Williamson: Yes, I can do it by argument. That is what I expected to do, and that is why I didn't ask him about the details of the file wrapper.

The Court: That is just what I was saying.

Mr. Williamson: It is a waste of time to ask him about it.

The Court: That is just what I was saying, that it can be covered in the argument.

Q. With regard to these tests you made of the Smith machine without the curtains, when did you make these tests?
A. When?
Q. Yes. A. Last Sunday.
Q. This last Sunday?
A. Yes. You are talking about the tests I testified to this morning?

491 (Question read by the reporter.)

A. Yes, that was last Sunday.
Q. What is the process of ordering tobacco which is described in one of the Proctor & Knowles patents. What do you mean by that?
A. That means getting it in a proper condition for working, getting in the proper amount of moisture and workability.

The Court: To get it into condition to roll it into cigars?

The Witness: Yes, it will dry out and get brittle if you don't—

The Court: Conditioning.

Q. That is it is adding moisture to the tobacco so as to dampen it, isn't it?
A. If the tobacco is too dry it is adding; if it is too wet, it is taking it away. There is a point in there where it works better.
Q. How long does the process take, do you know?
A. I don't know definitely how long it would take with tobacco. Of course all those materials absorb moisture from the air, and it would depend upon the amount the moisture required by the tobacco, and how much moisture you put in the air and how you regulated it. I can't say just how long it would take.
Q. Will you turn to that patent on the tobacco ordering, Professor?

492 Mr. Williamson: Proctor's.

Mr. Ely: Yes, that is 553,723.

The Witness: Yes, I have it.

Q. Now, does that process take an hour or does it take five minutes or twenty minutes or how long does it take? Does it take a day?

A. Well, I would imagine, I don't know just how long, but I should imagine that it would take the better part of a day and maybe longer. There are some of these materials like tobacco and so on that must be thoroughly conditioned at the right atmosphere, and kept there a sufficient length of time to have the fibres in a certain state of moisture. Now, I can't say on tobacco just how long it would take.

The Court: Have you ever handled tobacco at all?

The Witness: Yes.

The Court: Have you ever been through a cigar factory and seen the process there?

The Witness: I haven't been in a cigar factory. I handled tobacco as a youngster on the farm.

The Court: You stripped it, did you?

The Witness: I stripped it, and we used to shed it and handle it. I have been all through that part.

The Court: Is that as far as your experience goes there?

The Witness: With tobacco, yes.

Q. Well, this ordering is giving the tobacco the same
493 amount of moisture so that it could be handled without crumbling and breaking?

A. Yes, conditioning it.

Q. In this ordering process there is no heat added, is there? A. There is none shown here, no.

Mr. Williamson: No what?

The Witness: No heat added.

Q. And there is no inlets here for the interchange of any —in other words, there is no freshening of the air in there?

A. No, there is in the—just a minute. I don't think there are in this tobacco process. I don't recollect any right now.

Q. There isn't for the purpose of drying out the tobacco, is it?

A. Not unless it is too moist. Of course if the tobacco is too wet, then you would have to dry it out, and you would have to heat it the proper condition; if you get it too wet then you have got to dry it out.

Q. Ordinarily the process is for drying the tobacco out, is it?

Mr. Williamson: Objected to as incompetent. This witness hasn't qualified on this subject.

The Court: I don't think this witness knows anything about this.

Mr. Williamson: And the evidence doesn't show that this witness has any knowledge of this because he hasn't
494 had experience with tobacco. It is as plain as the nose on his face. There is no use talking about it. Sustain the objection?

The Court: I won't receive any testimony of his as to how much moisture is necessary for the conditioning of tobacco because you don't know, do you?

The Witness: In a general way, not very much.

Mr. Williamson: You mean about the handling of tobacco.

The Court: Everybody knows if you expose tobacco to moisture it will take it up, and when it isn't exposed to moisture it gets very dry so it will crumble all to pieces and you don't know anything more about it than that, do you?

The Witness: I know nothing about how much you have got to have or how long it takes to come into it.

The Court: You know in a cigar factory the leaves are there slit, and the fibres—

The Witness: Yes.

The Court: And you don't know anything about how much moisture or just what condition it has to be.

The Witness: No, I haven't been in cigar factories, and I don't know the moisture that is necessary.

The Court: I don't think it is necessary to waste time on that.

Mr. Ely: I don't think so. It is a remote art. I
495 just wanted to bring out those facts.

Q. Suppose you had this machine of Proctor, patent 553,723 and suppose you put eggs in one side, and tobacco in the other and ran it so the tobacco was ordered, would you hatch chicks?

A. I wouldn't expect to, no. I wouldn't expect to work that combination out.

Q. And if you put eggs in the Senate Chamber and ran the Senate chamber so it was livable for the senators, would you hatch chicks in that chamber? A. No.

Q. In an ordinary house if you put eggs in an ordinary living room and kept the living room at the proper temperature, and moisture conditions for living, would you hatch eggs in that room?

A. No, probably not, too cool.

Mr. Williams: Judge Hickenlooper pointed out in his decision that his court room could be changed into an incubator by applying the proper heat and regulation.

The Court: Who did?

Mr. Williamson: Judge Hickenlooper.

The Court: Did he know how to do it?

The Witness: I would like to state, if I may, that these conditions have all been considered proper conditions for human beings, and not the possibilities. If you had asked me if it was possible to regulate that I would say yes.

Q. But the conditions and requirements for human beings and for living rooms and for senators of the United
496 States are quite different than those for egg hatching? A. Yes.

Q. In fact when we were down looking at the machines, the other day you said that you didn't run the machines at the temperature of incubation or the moisture because it wouldn't be comfortable in there for us, isn't that right?

A. Yes, but we all admitted it wouldn't make any difference so far as the operation is concerned. The principle is the same in the living room. You could regulate your temperature and have it in hatching condition, but you don't live that way.

Q. But the conditions are different as far as the requirements are concerned?

A. Well, different.

Q. That is right. Now these incubators you have cited, for instance the Bassini and Hayden patent and the Guerin patent number 300,019 and the Campbell patent, the Morgan patent, the Bell patent, the VanKeuren patent, and the Koons patent, they are all incubators of what is known as a cabinet or still air type, aren't they?

A. I will have to pick those out. I can't answer it.

Mr. Williamson: The question is objected to as hearsay, incompetent, irrelevant and immaterial, because of lack of proper identification. It is impossible to answer that question with reference to all those patents, I think in one answer.

(The question is read by the reporter.)

497 The Court: He may answer.

A. I say no.

Q. What is the exception?

A. You have asked a combination there that is hard to say, a cabinet or still air type. Those two things don't mean anything. I have got to take each thing separate.

Q. Cross the cabinet out and say still air type, are they all of the still air type?

A. I will have to get the patents together before I can tell.

Q. I think they are, preparatory to another question.

A. If you will let me take time to get these together.

Mr. Williamson: The witness is instructed he may take as much time as the Court will permit to get those patents so that he can answer the question.

Q. You want the list?

A. Give me the list. I will find them here then.

Q. I have got the patents here. I have got them all bound up in order so that you can follow them through. Bassini and Hayden. A. What is your question?

Q. The still air type.

A. The still air type. I am just trying to get a line on these patents. I don't know what they are.

Q. Well, I will show you.

A. Now, might I ask what you mean by still air
498 type? Now your first patent there, Bassini & Hayden, isn't still air. The air is passing up through the incubator. I don't know what you mean by still air.

Q. Any circulation through the machine in any of these patents is wholly by convection currents, isn't it?

Mr. Williamson: Now, that question is objected to because it is indefinite. It don't refer to any particular patent.

The Court: He is asking if it isn't so with reference to all.

Mr. Williamson: All the patents he had before him. Then I instruct the witness to take his time until he has time to look over them all. The way it is interpreted by the Court that means all of them.

Mr. Ely: Shall I ask him each one?

The Court: Yes.

Q. And the Guerin patent, that is the type in which that circulation is provided by convection currents alone, is it not?

A. That is convection currents.

Q. And there is no staged incubation described in that patent?

A. None, that is large scale, not staged.

Q. Not staged incubation?

A. Not that I recollect in that.

Q. And the Bassini & Hayden, 330,457, what are your
499 answers with regard to that?

A. Well, that is gravity circulation up through the egg trays.

Mr. Williamson: Better get the name of the patent into it or else the record won't show.

The Witness: The Bassini & Hayden patent is gravity circulation of air or other heat of the trays—of the heating elements and eggs within the incubator.

Q. That is convection currents, isn't it?

A. It is convection and gravity circulation combined. Convection and gravity are two different things, of course.

Q. And in that the eggs are all in one stage of incubation, that is right, isn't it?

A. Yes, so far as the patent described, they are.

Q. And this particular patent says, "In this way we [present] sudden chilling drafts and like abrupt variations of temperature." That is right, isn't it?

A. What does that refer to? Let's see what that refers to? Where did you get that? Of course that statement that you bring out there refers to that whole paragraph which describes the placing of the eggs between the heating coils and so on and so the statement in itself can't be considered unless I read that full paragraph.

(Adjournment taken to November 23, 1932, at 10 o'clock A. M.)

---

500 November 23, 1932.
At 10 o'clock a. m.

Hearing resumed pursuant to adjournment.

Court and counsel present.

Prof. Frank B. Rowley, recalled, testified as follows:

Cross-Examination.

By Mr. Ely:

Q. Mr. Rowley, did you ever see a machine like that shown in the Schmidt Patent, Number 1,010,809, for drying macaroni; did you ever see that machine?

A. What is the number of the patent?

Q. 1,010,809; this is the macaroni drying machine?

A. No, never saw that machine, if that is your question.

Q. No; and you never built such a machine and tried it out, in a hatching way, did you? A. No.

Q. Well, that is all; I am not going to ask you any more questions on that.

A. All right.

Q. Now, referring to these tests that you made on Sunday, with the Smith incubator,—

A. (interrupting) Yes, sir.

Q. (continuing)—with the curtain removed?

Mr. Williamson: (interrupting) You mean, last Sunday?

Mr. Ely: Yes.

501 By Mr. Ely:

Q. In the Smith incubator, the air, as it comes from the fan, comes out in a cone, does it not?

A. Yes, sir.

Q. And the position at which the cone intersects the vertical sides of the corridor is where,—how far from the floor?

A. Well, in that particular case it was about,—the cone probably intersected very near the floor, but from the smoke it would appear that it intersected about two feet from the floor.

Mr. Williamson: (Interrupting) Well, you mean, without the curtains?

The Court: That is what he asked for.

Mr. Ely: I used the word "curtain."

Mr. Williamson: Now, just a minute. If you will listen to the question, you will find that the word "curtain" was not used in that question.

Q. Now, is there any difference in the point where the cone strikes the vertical plane, when the curtains were drawn, or when they were drawn back, and when they were stretched out,—is there any differnce in that point?

A. That is, you refer to the point where the cone strikes the floor?

Q. No, no; I am talking about the point where the cone strikes the vertical plane of the ends of the trays?

A. Well, I did not make a survey to find just where it
502 struck, with the curtains on; I cannot answer that.

Q. Then you don't know whether it made any difference in the formation of the cone whether the curtain was forward, or whether it was drawn back?

A. Well, I don't know from actual tests, but naturally I would expect a different condition,—for a different condition.

Q. That is all right. I did not want you to speculate on it; I asked you whether you knew.

A. Well, I have not tested it.

Q. Now, do I understand you to say that when the curtain was removed, or pulled back, that the air came back into the corridor all the way up from the bottom of the stack of trays, up to the beam?

A. You mean, clear from the floor up?

Q. Yes. A. No, I don't think I said that.

Q. Well, what did you say?

A. It is about two feet,—about at the two foot level,—around in there. It was variable across the length of the machine, of course, but somewhere around two feet, or in that level there, it was coming out into the corridor.

By the Court:

Q. Well, I don't quite understand you; do you mean on the plane of two feet from the floor?

A. Approximately that, it came in, and below that, it was going in, under that line, straight across, but it varied
503 at different places.

Q. But from that line, your testimony is that the air was coming back into the corridor all the way up to the beams?

A. Now, that was where I surveyed it, in front of the fan; it was coming out from there, flowing out from the trays into the corridor up there. Now, there might have been places up near the top some place, where it might have been the other way, but the majority of it was coming out. Of course, to arrive at that definitely, you would have to go all over these points, and make a definite survey of it.

Q. Well, did you not take one line and follow that line right straight up to the beam?

A. I went up pretty close, up to the fan; I don't know as I went clear up to the beam in there.

Q. Well, up to the level of the fan?

A. Well, practically up in there, yes. I did not survey every point as to where my,—I did not survey every point through there.

Q. No, but you did take one definite line, and followed it all the way up to the beam, didn't you?

A. Well, I moved the smoke up and down in various places through the trays.

The Court: His question is, whether or not you followed it up,—the question is, whether the beam is,—

The Witness: I followed it up substantially to the fan.

504 By the Court:

Q. I understand that the beam is the bottom of the false floor?

Mr. Ely: Yes, that is right,—up to the bottom of the false floor.

The Court: I understand the beam is the bottom of the false floor?

Mr. Ely: Yes, that is right, up to the bottom of the false floor.

A. Well, I don't know as I was up in the corner, right there at the top of the false floor; that I really can say that I actually found smoke up in that point; but I did this: I put smoke back in, about on the two foot line back,—a foot and eighteen inches or such a matter back in the tray, and that smoke there flowed up, and came under the fan, out into the corridor, under the fan, which shows the general flow there.

By Mr. Ely:

Q. That is, your understanding would be that the general flow would be down from the fan, and then back into the corridor, without going back through the fan?

A. Much of it goes that way, yes,—much of it.

Q. Now, you said "much." Now, when you had the curtains pulled back out of the way, did you notice any diminution in the amount of air that was discharged by the fan downward? A. At the fan, you mean?

Q. I asked you, did you notice any diminution in the
505 amount of air that was discharged by the fan downward?

A. Well, I took the volume or the velocity of the air at the discharging face of the fan, the average velocity.

Q. Well, did you notice any difference in the amount that was discharged from the fan downward, when the curtains were back, and when they were stretched out?

A. No, I did not; I would say that that was about the same discharge by the fan, as far as observations went.

Q. Now, the fan is fed, except for the small amount that comes in at the fresh air opening,—that fan is fed, or those fans are fed from the space between the top of the beam and the ceiling of the incubator, are they not?

A. They are, when the curtains are on there, yes.

Q. Do you know, or did you find out whether there was more or less air flowing over the tops of these beams, when the curtains were stretched out, than when they were withdrawn?

A. I did not make a test to determine that part of it; I did not go that far with the survey.

Q. You did not make that test?

A. I did not make that test, no.

Q. So that you don't know whether there is any more or less, or the same amount of air is fed into the fan from over these beams, with the curtains in the two positions?

A. I have made no tests to show that.

By the Court:

Q. Now, how would the air get to the fans except over the beams?

506 A. I would infer, of course, that what air actually passed through the fan itself would come over the beams; and that would be the same; I did not test that.

By Mr. Ely:

Q. And you noted no diminution of the amount of air, you said, that was being fed down by the fan, with the curtains in the two positions?

A. No, I did not compare that definitely.

Q. And you did not go to the trouble of checking up, to see whether that made any difference in the amount of air that went to the fan over the beams?

A. Well, that was not the object of the test; I did not make that survey.

Q. Now, you testified in your direct examination that much of the air came back into the corridor, and yet you did not test whether there was any diminution in the amount of the air that went over the beams into the fans? A. No.

Q. Would it surprise you to learn that just as much air goes over the beams into the fans with the curtains withdrawn, as with the curtains in place?

A. No, that would not surprise me, if that is the only place that it could get in there.

Q. Yes. As a matter of fact, a little more goes over the beams with the curtains withdrawn?

A. I do not know that.

Q. You do not know that; you did not test that?

507 A. I did not test that.

Q. And yet you told the Court, or you pretended to tell the Court about the traveling of the air, even though you did not test that very obvious fact as to the amount of air which was going down,—

The Court: (interrupting) Well, I think that same question has been answered over and over again.

Mr. Williamson: Give the witness a chance to answer the question.

Mr. Ely: Well, I will withdraw that question.

The Court: I think that question is mere repetition.

The Witness: I feel so; I tried to tell you, Your Honor, just what I did and what happened.

By Mr. Ely:

Q. Now, Professor Rowley, will you just get your original sheet that you made your notes on at the time you took the tests down on Third Street here; will you get that original sheet?

Mr. Williamson: The tests of what machine?

Mr. Ely: The tests of the Snow machine down there.

A. What exhibit is that; I don't know?

By Mr. Ely:

Q. I want your original one, the one that you made the notes on when you were down there.

Mr. Ralph E. Williamson, Jr.: That is Defendant's Exhibit M; here it is (indicating).

By Mr. Ely:

Q. I think you have an error in your copy that you

508 gave me, and I wanted to see if I were right, or whether you were right. Your marks differ a little from mine, and I want to check that up with you, just for a minute.

Mr. Ralph E. Williamson: Here they are. (Documents submitted.)

By Mr. Ely:

Q. What I want particularly is that section on the line BB, that is, through the center plane of the trays on the left hand side?

A. BB,—all right.

The Court: What page are you on?

Mr. Ely: Well, this says "Diagram Number 2;" it is the section line BB.

A. I have it here (indicating).

By Mr. Ely:

Q. Now, will you look at this point on the right hand fan, between the columns 8 and 9, and on the center line down; what have you got there, Professor?

A. On the center line, out and down?

Q. Well, between 8 and 9? A. Yes.

Q. Between 8 and 9, and then on this line, just immediately above the center of the fan; do you find that place?

A. Well, I have got "IRD" here.

Q. Well, that is what I thought, because in the drawing,—

The Court: (interrupting) I don't see where that is; I have got "IRO."

The Witness: Well, that is in the copy, and that copy
509 is wrong.

The Court: It should be "D."

Mr. Ely: Yes, that is what I had.

The Witness: Capital letter "D."

By Mr. Ely:

Q. It should be "IRD," that is in, rear and down?

A. Yes, that is right; this is the original that I have here.

Q. Now, Professor Rowley, taking a current of air,—a current of air is what is known as a critical speed, isn't it; are you familiar with that term, or is that a correct term?

A. I don't know how you would apply the term "critical speed" to a current of air, unless you were talking about vibration, or something like that.

Q. Well, is there a point in the speed,—is there a point in the speed, in the travel of a current of air beyond which it becomes turbulent; in other words, when does a current of air become turbulent,—at what speed?

A. Well, you cannot specify that speed. It depends entirely on the conditions,—as to starting a current of air, and how it is delivered. There is no place that I can define, as to where it becomes turbulent.

By the Court:

Q. I suppose, that at a certain speed, it becomes turbulent?

A. Not necessarily; it depends on how these stream lines are started at the beginning of the current.

By Mr. Ely:

Q. Suppose you project a current of air from the fan,
510 —can you project a current of air from the fan at a speed so that it will not be turbulent?

A. Well, you can, if I understand your question right. I would expect it would have a general movement forward, with some turbulence in the fan, if it is from the fan.

Q. Yes. That is, any current projected by the fan will be more or less turbulent, that is right, isn't it?

A. Well, you could not say any current from any fan, because you can create a current and deliver it from a nozzle, with a properly rounded nozzle or orifice, so that it won't become turbulent, as it is when it is delivered from a fan.

Q. At what speed would you have to deliver a current of air from a nozzle,—what is the limit of speed at which it would become turbulent?

A. Well, I could not define, or give you right offhand any limit of speed at which it will become turbulent; there are many factors that affect that.

Q. That is, the speed of air current delivered from a fan, say, propelling the air at 800 feet per minute, that would be turbulent, wouldn't it?

A. If you deliver it from the fan directly, to the blades, there would be some turbulence in the stream itself, yes.

Q. But in any of the speeds of the fan that we are dealing with here, in these incubator structures, the speed of the air is sufficiently fast so that the currents are turbulent, that is true, isn't it?

511 A. Well, you are confusing the reasons for the turbulence. Of course, I will admit, that within the stream there is some turbulence, yes, but you are confusing your terms there.

Mr. Williamson: Speak a little louder, Professor.

By Mr. Ely:

Q. Well, in any of the air speeds that we have been dealing with, in discussing these currents of air in the machines,

the air is turbulent; although it is moving in a stream, yet, it is turbulent within that stream, that is correct, is it not?

The Court: You mean by turbulent, that it tumbles?

Mr. Ely: Boiling, tumbles, stirred up.

A. Will you repeat that question, please?

(Previous question read by the reporter.)

A. Well, it is not a question of the speed that we have been dealing with. Now, I want to make one point clear.

By Mr. Ely:

Q. No, never mind.

Mr. Williamson: Let him finish his answer, please.

By Mr. Ely:

Q. I think you can answer my question.

Mr. Williamson: He is answering it; let him finish his answer.

The Court: Well, let him take his own way in answering it.

A. There are certain places, for instance, if we refer to the incubator, either one of the incubators,—there are certain places, such as those spaces underneath the hatching trays, and such as the delivery of air, or cone, as you
512 might call it, from the Smith fan, in which there are air currents, which are sufficiently straight to consider measuring them by that method, by the anemometer, but there are other places where the are movements in the open, for which the anemometer may not show direction at all. Now, I want to make that clear.

By Mr. Ely:

Q. Well, the trouble of it is that you don't answer my question.

Mr. Wiliamson: If Your Honor please, the witness should be permitted to finish his answer.

The Court: I think he has finished it.

A. Yes, I think I have made it clear; I want to make the answer clear.

The Court: Go ahead, and answer it.

By Mr. Ely:

Q. Now, has an air current any other movement with it,—an air current has a tendency to whip, has it not?

A. Well, it depends on what you mean by whipping, and what you mean by an air current. An air current might have a perfectly smooth flow for a ways.

Q. But if it goes beyond that, to a certain speed, it will tend to whip, will it not?

A. The speed has nothing to do with the whipping movement.

Q. Don't you notice that in a fan,—in a flag flying on a windy day, that it whips?

A. Well, these currents out there in the open are entirely different from what we are talking about here; that is, there is this difference: You are trying to define directed
513 current, and say that the velocity of the speed makes that vhip. Now, it is not the speed up there that makes the flag whip.

By the Court:

Q. What is it that makes it whip?

A. Well, it is the general agitation of the open currents there. If you had an even velocity there, that is, smooth, absolutely smooth, even then, of course, you would have wrinkles in there; there would be a little bit in there. And we know that even though the wind is blowing in a certain direction, with a large volume of air that way, you have an up and down current and a cross current.

Q. That is to say, the whipping and turbulence is a characteristic of all air currents, is it not?

A. No, sir, it is not.

Q. That is to say, you think you can have an ideal air current?

A. You can get the same air current delivered from a nozzle, or a rounded orifice, which are nearly perfect.

Q. But where the air current is flowing in a room, you have a certain amount of whipping and turbulence in the air current?

A. In the air current in a room, you have diffusion, if you want to call it that.

Q. Yes. Now, which is more uniform,—which is more even and uniform throughout, an induced current or a forced current?

514 The Court: What do you mean?

By Mr. Ely:

Q. By an induced current, I mean one, for instance, in a fan, the current which is either driven into the fan, or the one which is discharged on the opposite side of the fan?

A. Well, if you make your question read the induced or the forced current, I don't think you could distinguish between the two; you would have to designate the method of inducing or forcing the current. If the method of forcing the current was one which stirred up the air, and the method of supplying the air to that forcing apparatus was stream-line and smooth, then, you would have some turbulence on the discharging end of the fan.

Q. And the current, coming to the fan from the intake end, then, would be more even and uniform than that which it discharges, is that what you mean?

A. They might not be; you might have them just the opposite way; it depends on the circumstances surrounding the air-flow.

Q. That is to say, if you take the ordinary fan, such as we have on the wall, the current is even and uniform,—more even and uniform as it comes into the in-take side of the fan than it is as it is discharged from the other side of the fan; that is true, is it not?

A. Well, it depends entirely on the surrounding conditions of the fan. You might have it either way. Naturally,
515 your fan tends to stir up the air when it goes through.

Q. That is, you have observed that because you saw a stream of smoke flowing into the fan, and then it comes out, and it is all broken up on the other side, and all stirred up, that is correct, is it not?

A. If you confine it to that particular case where that stream is passing through, of course, your mixture is more apparent as it passes through, but you have also got a much higher velocity as it passes through.

Q. Now, in your opinion, is the Smith commercial machine,—does that embody the method generally in the Smith Patents?

A. Well, the Smith commercial machine,—if you are talking about the disclosure in the Smith Patents,—the difference there is that in the Smith commercial machine the so-called canvas flaps between those tiers of eggs are omitted, and the air circulates more up through between the tiers than it does through the eggs in these lower trays. That is one difference. Then, of course, there are other differences there.

By Mr. Ely:

Q. Do you think that deprives the Smith commercial machine of the benefit of the Smith invention, or the Smith method, described in the Smith Patent?

Mr. Williamson: If that is confined to the disclosure, I make no objection, but if he is talking about the invention, I object to it.

Mr. Ely: Well, I have changed it.

516 A. Now, will you read the question, please?

(Previous question read by the reporter.)

Mr. Williamson: I object to the question the way it stands.

The Court: Well, you can reframe your question.

Mr. Williamson: Well, let us get the reframed question on the record.

Mr. Ely: Well, I have stricken out the word "invention."

The Court: Ignore the word "invention."

Mr. Ralph E. Williamson: Read the question as it now stands on the record.

(Previous question read—omitting the word "invention.")

A. Yes.

By Mr. Ely:

Q. You think the omission of these flaps upsets the whole process of the Smith Patent?

A. Well, it deprives them of the benefits that they are trying to get, because the benefit that they are trying to get is to circulate this air definitely up through those lower hotter trays of eggs, or around the trays. Now, we know, that if you take those flaps out, the air could not be forced through those eggs in the lower trays with any velocity that will give you any benefit more than still air, and that is what you are looking for in your Smith Patent or Smith specification.

Q. Do I understand that in your opinion these flaps
517 between the trays are the essential thing of the Smith Patent?

A. Well, I don't say that they are essential, but I say, that if you take them out, you certainly deprive the Smith system of the thing that they are trying to get.

Q. Then you don't think that the commercial machine uses the Smith method described in the Smith Patent, that that is not carried out in the commercial Smith machine?

A. Well, it is not carried out to the same degree.

Q. That is to say, it is a refinement, is that right?

A. It is more than just a refinement; it is not carried out to the same degree; you cannot force that air with any velocity over these lower hot eggs, unless you confine the current, and make it go over, unless there is a high resistance in a small area, and it stands to reason that it would not get

through there, and all the testimony and all the tests that have been made show that it would not get through there.

Q. Have you made any tests with the machine, with the flaps between the columns of trays?

A. No.

Q. Now, in the Smith commercial machine, the bulk of the air flows up between, in the columns between the egg trays, does it not?

A. Between the tiers, you mean?

Q. Yes.

A. On the outside?

Q. Yes.

A. Yes.

518 Mr. Williamson: Is that the commercial machine?

Mr. Ely: Yes.

A. Yes, I might of course say that as to around the ends of the egg trays and other places, but you are confining this to the section through the trays, I understand?

Q. Yes, it goes up through the columns.

A. If we take a section through the trays, yes.

Q. And then, in the Smith machine, you have a plurality of parallel currents over the whole extent of the machine, do you not?

A. Well, you might say that you have a plurality of columns moving up there between those tiers.

Q. Well, it is a plurality of parallel currents, is it not?

A. It depends on what you call a current or movement of air,—are parallel with what?

Q. That is, it moves steadily up through, or it moves constantly up through those passageways or vertical passageways?

A. As far as I know, it does; I don't know, you understand,—

Q. (interrupting) They are moving consistently.

A. Well, I could not say that it is consistent, even.

Q. It is always moving in the same direction?

A. I cannot say that it is moving in the same direction.

Q. You don't know?

A. Well, it has got to turn some place, to get over towards the fan; it certainly cannot move up from the

519 floor to the top all the way.

Q. I am talking about this movement between the columns of egg trays.

A. I am, too.

Q. And you do not know whether those currents of air go up through these columns all the way, do they not?

A. Well, they go in, up to the ceiling, straight up; otherwise, they will never get to the fan.

Q. That is, between the columns of trays, this air moves up in a column form, right straight up, through the columns, does it not?

A. Well, I have answered that, I think, but I will answer it again, if you want me to.

Q. Well, I think you have carried the thing clear up to the ceiling, and I want to ask you the direct question,—

The Court: (interrupting) The point is this: These columns that go clear up to the ceiling,—he is asking you if the air moves up to the top of the column.

Mr. Williamson: (interrupting) To the top of the ceiling.

The Court: No.

Mr. Williamson: To the top of what?

The Court: Well, these columns between the trays do not go to the ceiling, do they; how close to the ceiling do they go?

The Witness: Oh, I suppose it is a foot, or something
520 like that, in there.

The Court: Well, he is asking you whether the air moves consistently up in that column of air, through this space between the trays, up to the top.

The Witness: I would say that it does not move consistently clear to the top, no. What you mean by that is, in a straight column, moving generally up, in a straight line.

By Mr. Ely:

Q. Now, will you take your diagrams of the Snow machine, please, and take that sheet that I called your attention to this morning, and that sectional line BB; will you please take that?

A. (Witness does so.) By that, do you mean of the Snow machine,—which one do you mean?

Q. The vertical section, taken on the line BB?

A. Well, do you mean,—

Q. (interrupting) Well, I have given it your own name.

A. I have got it here (indicating).

Mr. Ely: This is it (indicating).

The Court: Where do you get the BB?

Mr. Ely: Well, BB is the center line.

By Mr. Ely:

Q. Go ahead, Professor, and explain what BB is.

Mr. Ralph E. Williamson: (interrupting) Right here (indicating).

The Court: Oh, yes; it is right here.

By Mr. Ely:

Q. Now, when you use a combination of letters like,
521 say, take, for instance, the top of the incubator, right underneath the ceiling, where you had letter "O," that means out, doesn't it? A. Yes, sir.

Q. That means straight out?

A. Yes, sir.

Q. Now, when you have got "OF," you mean by that a diagonal line which goes out, and towards the front?

A. Some place between out and towards the front. There might also have been some slight down movement; but that was the predominant movement.

Q. But, "out front" means a diagonal current going over towards the door?

A. Some place in that quadrant.

Q. And when you say "in," or "I," that means straight in, that is right, isn't it?

A. Substantially; it might be moving a little bit close to in.

Q. It might be veering a little bit?

A. It might be traveling around, but it is substantially moving in that direction.

Q. And when you say "IF," it means that it is moving in a diagonal direction into the fan, towards the door, that is right, isn't it,—towards the front?

A. "IF?"

Q. Yes. A. Yes.

522 Q. And when it is "IR," that means it is moving in and toward the rear in a diagonal direction?

A. Yes, sir.

Q. And "ID" means that it is moving in and moving down, toward the floor, in a diagonal direction?

A. Yes, sir.

Q. Now, will you take that section on the right, the section between the lines 7 and 12, and take it across that first, —well, the line between the third and the fourth trays; do you see what I mean?

A. I think I do, yes.

Q. Now, between 7 and 12, and these lines (indicating), that cross the third and fourth trays (indicating)?

A. Yes, sir.

Q. And also take the vertical column between 7 and 8; consider those two lines, will you, please?

A. (Witness indicating on chart.)

Q. Now, you have an in, a direct in on the line that crosses the third and fourth trays, and then you have an in on the line, the next lower line, that is right, isn't it?

A. You mean the next horizontal line?

Q. Yes, directly below.

A. Yes, if I understand you correctly.

Q. And it is fair to assume, isn't it, that the current in between those two points is also going in, is it not?

A. Probably; there might be some other current, but
523 that would be the way I take it from any data given here.

Q. And so on, down to the next one,—you have got another in, so that the current between the second and third trays is moving straight in?

The Court: That means, in from the corridor?

Mr. Ely: Yes.

By Mr. Ely:

Q. That is, between "I," the current is assumed to be moving in?

A. Well, of course, you must remember that if we are beginning to take in other points there, that have not been actually shown here, they are very close to the downward moving current, too; there might be eddy currents of all kinds here; that is shown by the downward current, right at the left.

Q. (interrupting) Just a minute. I am asking you to look at this place here (indicating).

A. Yes.

Mr. Williamson: If Your Honor please, I insist that the witness must be permitted to answer the question without being interrupted.

The Court: Yes, and he also should be definite in his answers. He is on cross-examination here, and he should be held to answer each particular question definitely.

Mr. Williamson: Yes, as practically as he can.

By Mr. Ely:

Q. Now, following that horizontal line over, or across the third and fourth trays, you have "ins" right straight across, do you not?

524 A. Yes.

Q. And it is fair to assume that the current in between those spots that you have got marked here, are going in, isn't it?

A. You would naturally assume that, yes.

Q. And you would also assume that from the fact that that is directly in front of the fan, and the current is going in through the fan?

A. Yes, the general direction there would be inward, at that point.

Q. And then, in the line that is immediately below that line, the next horizontal line, should be one, two, three, four ins; that is correct, isn't it?

A. Which lines are you talking about now?

Q. The next lower line, the one that crosses the sixth and seventh trays.

A. I only see,—you said I had how many there?

Q. Four ins.

A. Oh, they are not four in-lines, are they?

Q. Yes, "I," "I," "I," "I."

A. Well, are you talking about the line just above the center of the fan?

Q. I said four of these lines, one, two, three, four.

The Court: There is one in between there.

By Mr. Ely:

Q. Yes. The one in between is "IRD;" that is a diagonal current in, rear and down; that is toward the eye
525 of the fan, isn't it?

A. In, rear and down, yes.

Q. And, now, take the next line down, and in the next horizontal line below, the current is consistently in, all the way down?

A. Well, it is for the point right in the plane of the fan, but when you get out to the right hand side,—to the left hand side, then it is out.

Q. No, but I have not finished my question,—to the rear, between lines 7 and 9?

A. Oh, you asked me about the figures on the line, as I understood you.

Q. Well, I meant to finish my question,—to the rear, between lines 7 and 12; now, in that line, those are consistent ins, aren't they?

A. Between 7 and 12, those are in.

Q. Now, take the next lower line, that is, between 8 and 9, in and rear, that is right, isn't it?

A. In and rear, yes, sir.

Q. That means that that is a diagonal line going towards the center plane of the fan?

A. In a general direction, yes.

Q. And the next two are in and up, showing that that is a diagonal line which veers off toward the center of the fan a little bit, that is right, isn't it?

A. Yes, sir.

526 Q. And then, further, at the far corner, you have got a straight in?

A. (No answer.)

Q. That is right, isn't it?

A. Oh, between these, you have got an in and up, which you mean here (indicating)?

Q. No, I said there are two ins and up, but that is toward the fan? A. (No answer.)

Q. That is to say, in the rear, if there is any divergence from the direct in-line, that is towards the center of the fan slightly, it is toward the center of the fan slightly, that is right, isn't it?

A. That is it in general, yes.

Q. Now, taking that same section, we find that you have out currents all over the ceiling of the machine, coming out, that is right, isn't it?

A. Well, if you are confining yourself between 7 and 12, as I understand it.

Q. Yes, that is right, isn't it?

A. They are out and front.

Q. Well, they are out currents?

Mr. Williamson: His question reads "all over the machine," if I remember right.

The Court: No, it is plainly defined, as between 8 and 12.

527 Mr. Williamson: Certainly, I will withdraw my objection.

The Court: And the witness so understood it.

The Witness: Yes, I think I answered it that way, yes.

The Court: Yes, you did.

By Mr. Ely:

Q. Now, the same general condition is true of each area in front of the fan, isn't it,—each of the four areas?

A. Well, your same general condition might be true. In this particular case, you would find quite a little difference, if you analyze the two conditions. You have taken one agitator

here, and analyzed a specific point in that one. Now, if you are asking me to answer that general question, I might refer you to the second line down, between trays three and four, and move over to the left hand side.

Q. Where do you mean now?

A. Moving over there to the left hand side, where you have shown in your analysis here five points in, I think, and when we get over to the corresponding place on the left, we find that there is only one point in there. That point I read as flow coming across on that line, for the other agitators, "IDR," "IDR," "I," "IDF," and "IF." Now, you are asking me to state in general that that corresponds to the other side, in which there are five "I's." Now, of course, you have picked out a special case in here to analyze, and
528 that shows that you cannot compare that to any other special case.

Q. Of course, you have got the directions wholly by eye, didn't you? A. Yes, by watching the smoke.

Q. Now, we will take that second section first,—that section on the other side; let us analyze that. As a matter of fact, in each case where there is a variation or a veering from the direct in, that is a veering toward the center of the fan, is that right?

A. That seems to be right, yes.

The Court: Is that "IDF," as going toward the center of the fan?

By Mr. Ely:

Q. This is it here (indicating).

A. Yes, sir.

Q. In other words, you have got a sort of a cone formation of the air, which moves into the fan, isn't that right?

A. Well, of course, you probably have, as far as the velocity is concerned; you have got a higher velocity right at the eye of the fan, that is, in line with the eye of the fan,—there is probably a higher velocity out towards the fan than there is in towards the rear that you are talking about.

Q. Yes, but my statement is substantially correct, that you have substantially a cone formation going into the fan, isn't that right?

A. Well, you are talking about velocity; there is a higher velocity.

529 Q. Now, will you answer the question, please?

The Court: A drift of air?

The Witness: If you call it a drift of air, that is towards the fan, yes.

By Mr. Ely:

Q. Well, if it is the same as a drift, it is a positive movement, isn't it?

A. It is a movement towards the fan.

Q. It is in a general cone, isn't that right?

A. Well, I don't see that you can call it all over a general cone; you have taken two special cases here, and these that you have analyzed here, I would say that it is generally in, and where there is a difference, it shows toward the eye of the fan.

Q. I thought you would probably say that, so I save the best one for you after you made that remark. Now, will you take your section on the line DD.

The Court: Line DD; that is right up in here (indicating)?

Mr. Ely: Yes, that is through the center line on the other side (indicating).

By Mr. Ely:

Q. Now, take that area in front of the fan, on the right, and this time we will take between the lines 6 and 1, that is in front, right at the door? A. Yes.

Q. Now, will you take the line that crosses the trays, immediately above the center line of the fan, and will you
530 read me what you have?

A. In the line immediately above, between six?

Q. That horizontal line.

A. Between tiers six and one?

Q. Yes. A. I have here five "I's."

Q. That is in, right straight across, isn't it?

A. Yes, sir.

Q. Now, take the next line below that line; what have you got there?

A. Below that I have one "IF," and four "I's."

Q. That is, they are all in, except over there at the edge of the fan, that is right, is it?

A. Yes, sir.

Q. And that direction is in, front, that is, a general veering off toward the center of the fan, isn't it?

A. Yes, sir.

Q. Now, take the next line down, the one immediately above the hatching trays, what have you got there?

A. I have got two "IF's," and three "I's."

Q. That is, the two "IF's," that is veering off toward the center of the fan, isn't it?

A. Toward the center plane there, yes.

Q. Now, take the horizontal that crosses the fourth and fifth trays; what have you got there; and, in that case, go clear over to the line immediately at the center,—
531 starting over there, in that case?

A. Starting over at 7, do you mean?

Q. Between 6 and 7.

A. You mean, you want me to read that in all through here (indicating)?

Q. Yes, I want you to include all that area.

A. In that case, I am reading from left to right, starting between 6 and 7, "I," "IF," "I," "I," "I," "I," and "OU."

Q. No, no; pardon me, you went too far; I did not ask you to go beyond one.

A. Well, I went clear across.

Q. Well, I am confining my question to, between 1 and 6.

Mr. Williamson: The witness ought to be permitted to answer the question.

The Court: Well, gentlemen, I understand both of them, as to what they want, and what he says.

Mr. Williamson: But he stopped him before he was through.

The Court: No, he did not; he said "Over here by the wall it was 'OU,' " out and up.

The Witness: Yes.

The Court: But the question that you are trying to confine him to is, between those other lines.

The Witness: I think the first question was confining it between 6 and 1, to start with.

By Mr. Ely:

Q. All right. Now, take the top line, immediately be-
532 low the bottom; what have you there?

A. Where do you want me to start from?

Q. From between 6 and 7, and go between 1 and 2.

A. I give it as four "IF's," one "IR," and one "I".

Q. Yes. That is, the general direction of this is forward, except that it might vary slightly toward the center of the fan, and there is one slight exception, and that is the middle "IF."

A. I don't know if I got that question right.

Q. Well, what I am getting at is: It is in and forward, until you come to the center line of the fan, and then it is in-rear, that is right, isn't it?

A. No, mine is "IF," if I am reading the right one.

Q. Well, I said if you get to the center,—when you pass the center line, it becomes in-rear?

A. Yes, when you pass the center line.

Q. That is a general cone formation, is it not; that is due to the general cone formation of the air as it is drawn to the fan?

A. Well, I don't know that I would say that. It is drawn toward the fan,—practically all toward there; I cannot say that there was a general cone formation there.

Q. Well, wherever there is a variance from the direct in, it is always toward the center of the fan, is it not?

A. Yes, in general, yes.

Q. Now, this current that is coming in toward the fan
533 is coming from some place, isn't it?

A. Yes, sir.

Q. And it is coming from the current that is moving out along the ceiling, the side walls and the floor, isn't it, principally?

A. I would not say that it is coming from the current in there, because there are all kinds of different currents there; it is coming from that general agitated air in the chambers.

Q. And that air from the chamber comes out as a current around the entire walls and ceiling and floor of the incubator, isn't that right?

A. Well, it comes out somewhat around there, but there is some places where it goes in on the floor.

Q. That is due, isn't it, to the current which comes from the other fan, and cuts across, as we saw in the smoke test the other day, where there was an "in" there?

A. I cannot say what any one of these currents would do; there are so many different forces going on in here,—so as to confine a current like that to any one cause, or any one force.

Q. Don't you think you could tell where that current came from?

A. Well, I would have to make a pretty careful study of that, I think.

Q. Well, if you made a study, you could find out,
534 couldn't you?

A. Well, if I were to run these agitators at a different speed, and under different conditions, I would probably find certain places where I could state definitely or fairly definitely where the general flow of air is, that is, it might change with different speeds, and different conditions in there, because it is general agitation.

Q. But if the fans are kept moving at a constant speed all the time, the conditions will be the same in there, and the air movement will be the same at all times, isn't that right?

A. Well, no; you have the turning of the egg trays; when you turn these egg trays, it makes a difference in the way,—the turning of the egg trays would make a difference in the flow. These egg trays are turned at different angles, at different times, and every time that you turn one of these egg trays, or a whole side of them, you change your eddy currents, or mixing currents, whatever you want to call it, in that chamber.

Q. Did you ever try it, to find out how much difference that made?

A. No.

Q. So you don't know whether it really makes any difference or not, from an actual test?

A. Not from actual tests, but I know from experience.

Q. All right. Now, in that area, where the two fans
535 meet in the center of the machine, there is an out current, isn't there?

A. Which door are you referring to?

Q. Door 1,—we will take these sections DD.

A. Section DD?

Mr. Williamson: Are you referring to the fans on the opposite side, or the two on the same side?

By Mr. Ely:

Q. I think the Professor understands the question.

A. I think I understand the question, yes. Your question was, that there was an out current?

Q. Yes.

A. All right. I will start on that line, and read from the top to the bottom, in order to answer that.

Q. Yes.

A. Starting at the top, I find "UR;" at the next line I find "IF."

Q. (Interrupting): Just a minute. I don't think that you and I are going in the same place.

A. Well, I have got DD, from the top to the bottom, down here (indicating).

Q. Oh, I see; right there (indicating)?

A. That is what you asked me for. Starting at the top, and reading down, in answering that question, between 7 and 6, on the vertical line,—starting at the top down, it is "UR," "IF," "I," "I Mix," "O," "O;" that is all I have.

536 Q. All right. Now, will you take, and start at the bottom of 7 and 6 there; you have an "O" immediately above the hatching tray?

A. Yes, sir.

Q. And the next line above, you have an "O?"

A. Yes, sir.

Q. Now, move over slightly to the left, and take the second line, you have an "OU," don't you?

A. To the left, I don't see it.

Q. To the left, yes.

A. Which line do you mean?

Q. The cross line, that goes to "OU."

The Court: You mean up here (indicating)?

Mr. Ely: Yes.

A. Will you state the question, please?

Q. What I am getting at is that you have got an "out" between 7 and 8.

Mr. Williamson: If Your Honor please, the question ought to be read to the witness; it has been modified; what is the question?

A. I would like to know definitely what you are asking, and I will answer it.

By Mr. Ely:

Q. Well, never mind.

Mr. Williamson: I think the witness ought to be asked a perfectly clear question.

Mr. Ely: Well, never mind; I will withdraw it.

537 The Court: Well, that question is withdrawn.

By Mr. Ely:

Q. Now, from your studies of that motion, is it not a fact that the current, the movement of the two fans, as they meet, generates a narrow band of out-current, which comes out in the two,—between the two areas, fed by the fan, isn't that right?

A. Well, it is more or less mixed in there. Now, there is probably a predominance of out, but here we find,—in this one that we are referring to, there is really more in than there is out; I mean, in that other drawing, that diagram C, section C.

Q. No, no; I am asking you about DD.

A. I think you asked me about the general condition between the fans.

Q. No, I am asking you,—

Mr. Williamson (interrupting): I ask that the question be read. The witness was not permitted to finish his answer; Mr. Ely goes on, and asks him something else.

The Court: Well, the witness did not say anything; go ahead, and answer that.

The Witness: I understand that the question as to that applies between the fans, or agitators in general?

By Mr. Ely:

Q. Yes.

A. That is what I am trying to say.

Q. Go ahead.

A. Now, that line on section DD, I have already answered.

538

Q. Yes.

A. (Continuing): —because that is more out,—or it is more in than it is out, as far as the letters are concerned,—shows.

Now, taking the opposite side BB,—

Q. (interrupting): All right. What about BB?

A. There, reading from the top down, I find, starting at the top, "OF," "IU," "O," "O," "O."

By Mr. Ralph E. Williamson:

Q. What diagram are you referring to?

A. That is section BB, test diagram 2,—test diagram 2, data taken on the line BB, test diagram 1.

Now, next, on test diagram 2, data taken on line AA, diagram 1, and up in the upper right hand corner it is marked "Sheet 1" (indicating). In reading off from that diagram, from the top down, I only have three readings at the center, "ID."

By the Court:

Q. This one is "IOD" here.

A. No, that is "ID;" it is "ID," "O," "OF;" it is right here at the same drawing,—with only three figures on there.

Next, I take this diagram 3, sheet 1, data taken on line CC, that big one.

By Mr. Ely:

Q. That is the central corridor?

A. Yes, sir.
Q. Where is that, in front of the trays?
A. That is in front of the tray CC.
539 Q. That is in the corridor in front of the trays?
A. It is right down by the plane in front of the trays; it is shown very clearly on the test diagram 1, where it is taken. On the same line, through there, I have three figures, "IF," "I," and "Mix;" those are on the central portion. That is all that I have on that particular line.
Q. That would indicate, would it not, that in-out current?
A. I am not sure that my answer,—
Q. (interrupting): Pardon me; that would indicate,—

Mr. Williamson (interrupting): I think the witness should be permitted to answer the question.

The Court: Let him finish his answer, and then you can come back to it.

Mr. Ely: All right.

A. Now, the test diagram number 2, sheet number 2, which is marked "center" there, the corridor looking left,—reading from the top down, I find "IDM,"—"M" is mix. Below that, in the next line, "Mix Down." Below that, the next line, is "DF." The next line is "OF;" the next line is "ODF;" the next one is "Mix horizontal," and down below in the lower compartment is "I." On the left side, the space under the hatching tray,—

By the Court:
Q. That is what?
A. Down the center line, looking left.

By Mr. Ely:
Q. Is it not a fact, Professor Rowley, that at the gen-
540 eral plane, where the two fans intersect, or come together, there is an outward current, which moves out among the trays, and gradually fades, but part of it persists and goes out to the front of the trays, that is to say, if that current goes out through that area and turns back, it turns back into the current going into the fan?

Mr. Williamson: I ask that the question be amended, so as to make it clear whether he means two fans on one side of the machine, or two fans one on each of the opposite sides of the machine. There are two fans on each of the opposite sides of the machine.

The Court: Well, the question was not quite clear to me.

Mr. Ely: All right, I will put it in a different way, then.

By Mr. Ely:

Q. Take the two fans on one side wall; is it not a fact that in the area where the two fans come together there is an outward current that comes out at that point and gradually veers and comes back into the fan, isn't that so?

A. I cannot say that there is an outward current. There is an area in there where the air is agitated, as you know, and it goes in and out, as shown by this data. You can find places where it might go outward and it might go inward; it goes both places.

Q. Now, I have colored these two diagrams of yours,
541 the test line DD, that is on one side of the machine, and the test line BB is on the other side of the machine, in red and blue?

Mr. Williamson: You mean your copies?

Mr. Ely: Yes.

Mr. Williamson: We would prefer the one that was put in evidence.

By Mr. Ely:

Q. And I have put the red over the place where the current is in, and I have put the blue over the place where the current is out. Will you please examine those (documents submitted to the witness), and see if I have done it correctly?

Mr. Williamson: I object to the form of the question. This is not the testimony by Mr. Ely.

The Court: The objection is overruled.

Mr. Williamson: Exception.

A. That is, you mean that you have just shown the shaded area in here, for which you have taken two of these test diagrams, and you have colored around this section where it is marked mostly in?

Q. Where it is marked in,—where there is any in, yes.

A. Wherever there is an in, it is shown with red, regardless of what the other letters might be there.

Q. We have there a diagonal current that was in toward the center of the fan, as an in-current, if that is what you mean, then?

542 A. You have neglected it,—

Mr. Williamson: (interrupting) Mr. Ely, will you stay away from the witness; you are right up against his face, and it is very embarrassing to him.

By Mr. Ely:

Q. Every area that I have colored there with red is "in," toward the fan, is it not?

A. It is "I" and sometimes there are other numerals on here.

Q. Will you please answer my question?

The Court: Well, what do you mean, that that covers not only the "in," and which are directly "in," but it covers in, down, and in, right, and in-front?

The Witness: Yes.

Mr. Williamson: Now, if Your Honor please, if the question was put,—if Mr. Ely represents it that way, that would be one thing.

The Court: Well, this is a colored diagram, and he is asking him about coloring the diagram.

Mr. Williamson: Well, it is only his representation of it.

The Court: Certainly.

By Mr. Ely:

Q. That is correct, isn't it?

A. I think I answered it by stating that this shaded area here, as I understand it, that covers all of the points where there is an "I" in that point. If there is any other,—there may be other letters in with these "I's," of course, that are in the red shaded area.

543 Q. Yes, and this covers all of the current that goes toward the fan,—going in?

Mr. Williamson: I object to that,—I object to these sheets as incompetent; this witness did not make them. If he put that in,—

The Court: (interrupting) Just a moment. What you mean is that it covers that diagram where the diagram showed the area going toward the fan?

Mr. Ely: Yes, that is right.

A. I think you have got these all marked up, of the "I's," in red.

By Mr. Ely:

Q. Now, will you compare this diagram of yours, that I have colored red, with Mr. Taggart's diagram, Exhibit 13-CC, and state whether or not,—or whether they are in substantial conformity as to the areas indicated in red, flowing in toward the fan?

Mr. Williamson: Do you want to identify his in the question?

A. Well, the two diagrams show some red areas, one on each side, but they are different in shape.

By Mr. Ely:

Q. Are they not substantially the same?

A. Why, I suppose there are two red spots there; they are certainly different outlines.

Q. Are they not substantially the same outlines, Mr. Rowley?

A. Well, they are, as you might see; that would de-
544 pend on how close you want to compare them.

Q. Well, now, I said substantially the same?

A. They are different in shape, of course; they are in different relative positions, the blue and the red and the white, but the two red areas on each diagram,—

Mr. Williamson: (interrupting) On which diagram?

A. There are two red areas on each diagram.

By Mr. Ely:

Q. Well, are not these red areas substantially the same, to a certain extent?

A. Well, I could not say that they are of the same shape.

The Court: Well, of course, this diagram almost answers that question.

Mr. Ely: Well, I want it on the record.

Mr. Williamson: We did not put any colored diagrams in evidence.

By Mr. Ely:

Q. Aren't they substantially the same?

A. You have taken these test sheets and colored them up, showing these points to represent the same thing that you represented on the other, I suppose, but which areas are not the same, and, furthermore, your white areas on the two diagrams are entirely different, as shown along the base line (indicating).

Q. Are not the blue areas indicating the out-currents substantially the same?

A. Well, they run across the same general portion of the machine, at the top and the sides. The line through
545 the vertical center, however, is not the same.

By the Court:

Q. The blue line?

A. The blue line through the vertical center is not the same.

By Mr. Ely:

Q. Is it not a true statement that they are substantially the same; that is, there are some slight variations, but they are substantially the same?

A. Well, if I have to describe what I mean by the same, I don't think they are substaintially the same; it depends on what you mean by substantially the same. I think the diagrams are there, and they speak for themselves.

Q. Now, a variation might be affected by the fact that the fans were of different diameters; that would affect it slightly, wouldn't it?

A. It might, slightly, yes.

Q. And that might account for some change?

A. Possibly, yes.

Q. And the fact that the fans run at a little different speeds would affect it somewhat?

A. That might make some difference.

Q. But it is substantially the same?

Mr. Williamson: Now, I object to that as repetition; he has answered that two or three different times.

By Mr. Ely:

Q. Isn't it substantially the same, except for such variations as might be due to a difference in the size, or in speed of rotation of the fan, isn't that true?

546 A. Well, no; I would not say that.

Q. Well, as a matter of fact,—

A. (interrupting) I did not take this data at all; I know nothing about it.

The Court: This data is on what machine?

Mr. Ely: This data is on the machine that you saw over on Thirteenth Street, Your Honor; that is the Snow machine as we exhibited it.

Mr. Williamson: Now, we repeat our objection to these diagrams that Mr. Ely has been putting before this witness, on the ground that that we never made that machine over there; that is the plaintiff's model of the Snow machine; it is not our machine.

The Court: The objection is overruled.

Mr. Williamson: Exception.

Mr. Ely: (interrupting) I want to offer these two colored diagrams in evidence, Your Honor, as the next plaintiff's exhibits, the colored diagram on section line BB, the Rowley test diagram, as the next plaintiff's Exhibit 22.

(Document marked Plaintiff's Exhibit 22 by the reporter.)

Mr. Ely: And the section DD,—

The Court: (interrupting) Are you offering the letters, and are they offering the figures?

Mr. Ely: We are offering the figures, and they are
547 offering the letters.

The Court: And you are offering the figures?

Mr. Ely: Yes, this diagram is Plaintiff's Exhibit 22. And this diagram DD, colored, is Plaintiff's Exhibit 23.

(Document marked Plaintiff's Exhibit 23 by the reporter.)

Mr. Williamson: The exhibits that are offered in evidence are objected to as incompetent and immaterial, especially as to the coloring of them.

The Court: The objection is overruled.

Mr. Williamson: Exception.

The Court: They will be received in evidence.

By Mr. Ey:

Q. Did you know, Professor Rowley, when we took those tests on Monday last, last week Monday, on Thursday, when we were present,—did you know that that Snow machine had a fan blade, which was four inches less in diameter, than the fan blade of the machine at Sleepy Eye?

A. I knew the fan blade there from the drawing, but I did not know that it was exactly four inches less than the one at Sleepy Eye.

Q. You did not know that it was less?

A. I did not take the exact dimensions of the Sleepy Eye, no.

Q. You did not know, then, whether the fans were the same size in the Sleepy Eye machine, as they were up
548 here, or not, did you?

A. Not from measurement, no.

Q. You did not know that? A. No.

Q. Did you know that the fans were run at different speeds here in Minneapolis from what they were at Sleepy Eye?

A. Well, I took that on the test day; I have shown what speed they had.

Q. But you did not know that when you started out, did you?

A. I did not know that there was a slippage in the belt, no; and I did not know definitely what the speed was, until I took it.

Q. You recall that we asked you to ascertain the speed of rotation of the fans, and the size of the fans, before you started your tests, don't you?

A. I don't know that I recall that; I know, at the time we were taking the tests, you said something about the speed; I don't know just when that was.

Q. And you would not let us check up on those things, until after you had made your tests; do you remember that?

A. Well, we were in the midst of those tests then.

Q. Well, but didn't we ask you to measure the speed of the fans before you made your tests, and was not that request denied?

549 A. I am not sure whether it was before the tests were started. I know that you did have a request of some kind, to measure, or to make some tests.

Q. And you went ahead and made those tests without knowing whether the fans were the same size as the fans in Sleepy Eye, or whether their speed and rotation was the same, didn't you?

A. Well, as a matter of fact, I don't think it made any difference as to the principle of the operation at all.

Q. Oh, you don't think it makes any difference as to the air current, or how fast the fan moves?

A. It does not make any difference as to the method or principle of operation of the machine, as to how fast they move.

Q. It does not make any difference at all?

A. (interrupting) Within reasonable limits.

Q. It does not make any difference as to the size of the fan, or its speed, as to how the current behaves, is that right?

A. I don't think I said that.

Q. Well, does it?

A. The size and speed of the fans will make a difference at the different places in there, and the velocity of the current, and the churning, yes.

Q. Yes. And the fact that the fans are unbalanced will make some difference, will it not, that is, one fan may
550 be rotating a good deal faster than another, and that will make a difference, won't it?

A. That is, if you change it,—any alteration that you would make,—and the speed variance will change it, shift it around; it will shift those eddy currents, and various currents at whatever place in the machine, would naturally be shifted.

Q. Then you would expect to find these same conditions in the exact shape in these areas, as to the currents, between the Sleepy Eye machine and the one you saw here in Minneapolis, would you?

A. I would expect in any two machines, if there was any difference in location at all, that there would be some difference in the general current.

Q. But the principle of operation of the Sleepy Eye machine, and the one down here, is just the same, isn't it?

A. The principle of operation is, yes.

Q. Now, in this area where the current is going in toward the fan, in the Snow machine it is going in in the space between the columns of trays, isn't it?

A. Well, it is going in in whatever the movement is; it is between the columns of tiers of trays, and also between the individual trays. In these, there is a space in there, of course.

Q. Of course, the biggest space is between the column of trays, and the big proportion of the air goes between
551 the column of trays, that is right, isn't it?

A. Well, that biggest space, or, as to the biggest proportion, I could not say definitely what the proportion was there, because I never measured them as to proportion.

Q. And it moves,—the air moves in, in horizontal planes in the columns, in the space between the columns of egg trays, doesn't it?

A. Between the tiers of egg trays.

Q. Yes, in the space between the tiers.

A. Not always in horizontal planes; sometimes, downward.

Q. Yes; sometimes, as well as downward, toward the center?

A. It depends entirely upon where you take you section lines through that area, of course.

Q. But, taking this section here, in Plaintiff's Exhibit 23, that is the section on the line DD,—into the area between the lines 6 and 1, the current is in the main moving in a horizontal line, in toward the fan, in the space between the columns of trays, that is correct, is it not?

A. This one here (indicating)?

Q. Yes.

A. There are some "I's" confined to that limit.

Q. And that movement is at right angles to the plane of the fan?

A. In that movement, the "I's" are substantially at right angles to F, and so on.

Q. Well, they are substantially so?

552 A. No, I want to make that clear. While "I" may be the predominant term there, there still may be some up and down movement, of course; that is not a direct "I."

Q. Well, there may be a wall, as we have said, and the wall veers it again toward the center of the fan?

A. Well, it may veer it up and down anywhere in this.

Q. Well, it always veers toward the center of the fan, does it not? A. What is that?

Q. It always veers toward the center of the fan in that area?

A. Well, with that predominance, but it does not always veer; you can find plenty of points where it does not veer toward the center of the fan, that is, where it will veer in some other direction.

By the Court:

Q. Well, you have marked it on these places?

A. I have marked the different places, yes.

The Court: Well, I can look at it and tell.

The Witness: Yes.

By Mr. Ely:

Q. Now, the movement of air is consistent and is just the same at any time that you go into the machine, isn't it?

Mr. Williamson: That is objected to as repetition. That question was put to the witness a half a dozen different times.

553 The Court: Well, the objection is overruled.

Mr. Williamson: Exception.

A. Well, of course, as I stated before, if you change your trays, you might change your direction, and so on, in there.

Q. Outside of that, you do not know of any reason for change?

A. If you keep the machines running just the same, and don't change anything, the trays or anything, then the movement would be substantially the same.

Q. Have you ever seen either a Smith or a Snow incubator in operation?

A. Not with eggs in it.

Q. You have never seen it actually hatch eggs?

A. No.

Q. How many times have you seen a Smith incubator?

A. Well, three, I think,—three or four.

Q. When was that; when was the first time that you ever saw a Smith incubator?

A. Sometime in the forepart of last September.

Q. Did you make a study of the Smith incubator then?

A. I just observed it in a general way; I observed the operation of it, but not studied it.

Q. When did you see it again?

A. The next time I saw it was down here at the Flour Exchange.

554 Q. And that was when we were there the other day?

A. I saw it before that time down there.

Q. How many times have you seen the Snow incubator?

A. Well, I saw the Snow incubator twice at Sleepy Eye, and I saw this one at the Flour Exchange, and I saw your model, plaintiff's exhibit of the Snow machine.

Q. How much time have you spent testing the Snow machine and the Smith machine?

A. Oh, I don't know,—

Mr. Ralph E. Williamson: That is objected to as immaterial, Your Honor.

The Court: The objection is overruled. He may state.

Mr. Williamson: Exception.

A. I could not state the exact time. I studied it; I think I took around four hours, or such a matter, and then, the tests the other day; I don't remember the exact time that I spent on them; those were tests that are introduced here in the record, and that test was the most,—was more completely recorded than any other test.

By Mr. Ely:

Q. Did you ever make any tests of any kind in the region of the trays, in the circulation, except the tests that we saw you make the other day; have you tested the currents of air in the Snow machine, in the trays, throughout the breadth of the trays?

A. Well, if I understand you, you mean the current in between the trays?

555 Q. No, in the region of the trays.

A. Well, I have taken the current between,—I mean, that I have taken smoke tests between different trays, and I have reached back, farther back, where I could spread the trays, and put smoke to the back,—farther to the back wall, near the agitator or the fan.

Q. When did you do that?

A. Well, I did that probably three or four days before I made the tests,—before I made these tests on there. I don't know the exact date now.

Q. After you get back, out of the corridor, in the Snow machine, the movement of the air at any one spot, back in the trays, is constantly in toward the fan, isn't it, in the area where the current moves in?

A. That is, you mean in these areas that we have been talking about here?

Q. Yes.

A. Well, my diagram there recorded what I found in that test.

Q. Well, your diagrams only cover one test in the center line of the trays, at the test in front of the trays; and now, I am asking you what you found from the rear of the front of the trays, back to the fan?

A. That is, you mean back near the fan?

Q. Take the front of the tray, and right at the rear of the front of the tray, and back to the fan, did you make
556 that test through that area?

A. I did not cover all of that area in there, no; I have taken tests in there intermittently, and at various places in there, but I have not made a survey of the rear between the edge of the center line.

Q. So you don't really know what is going on there, do you?

A. Well, I know something about what is going on there, yes, but I did not take the data when we made these particular tests the other day.

Q. In the Snow machine, we have a closed incubator chamber, do we not?

A. Yes, with the exception of these vents.

Q. That is, the Snow incubator has restricted openings for the interchange of air from the inside to the outside, that is right, isn't it? A. Yes, sir.

Q. And, in the Snow machine, we have a plurality of eggs that are stacked in tiers, one above the other, do we not?

A. Yes, sir.

Q. And we also have eggs which are in various stages of incubation, do we not?

A. Yes, sir.

Q. And we have a current of air in that Snow machine, do we not?

A. Yes, we have a current of air through there.

Q. And the temperature within the Snow machine
557 is equalized throughout; that is your understanding, is it not, in the operation of it, that it is equalized throughout? A. Substantially, yes, sir.

Q. And the moisture is conserved, except such as might escape through these small openings, that is correct, isn't it?

A. Yes; it is conserved, but controlled, of course, by humidifiers.

Q. And the air, the movement of the air in the Snow machine is in continuance and repeated cycles or circuits?

A. No, not in repeated circuits, not of any part of the air that goes all over the machine; you would not expect any portion of the air to follow the same circuit; these eddy currents go all over.

Q. Yes. However, the main body,—leaving out of consideration one particle of air, the main body of air moves in constantly repeating cycles or circuits, does it not?

A. I would not say that, no; it mixes all over. Of course, you can find places in there where there are currents in one direction, or you can find areas in there where there is a general movement, but you could not say that it moves constantly in one direction in the machine.

Q. That is, the body of air moves into the fan, and then it moves around, out of the fan; it is discharged, and it comes back in, and it is upset, but confined to a repeating cycle movement of air in the machine?

558 A. Well, the air goes into the fan, there, and it goes out in all directions, at the peripheries of the fan, and from there it goes to the ceiling and the floor, to the end walls, and then between the fans it comes together, of course, to a general mix, and it works its way back into the corridor, where it is agitated; and then it goes through the trays, coming out, and part of it goes around the trays; some of it starts out from the fan toward the corridor, and goes back before it gets out of the corridor; in other words, generally the currents go in various directions, through the trays and about the trays, and about the machine.

Q. Yes, but the air that comes out of the fan, comes back into the fan, and is re-cycled by the fan, is it not?

A. Well, the air, of course,—it comes back,—I mean, as it goes out of the fan,—as the air goes out of the fan, it must ultimately get back to one fan or the other, or one agitator or the other; it has to continually move, to get some place.

Q. And it moves around and around, in repeated cycles, perhaps, from one fan to another, but in repeated circuits, in the machine, does it not?

A. Well, the air does not go in the same repeated circuits, no.

Q. That is, it may go to one side, and then the other, but the general movement of the body of air is in re-
559 peated cycles, over and over again, through that machine, isn't that right?

A. No, I would not say that.

Q. Well, all the air gets into the fan at some time, and is discharged and returned back to the fan, is it not?

A. Yes, ultimately all the air in the place will pass through the different fans,—mix it.

Q. That is, the circuit, or the cycle is repeated over and over again, in the Snow machine?

Mr. Williamson: I object to the question, as sheer repetition; it has been asked and answered a dozen times.

By Mr. Ely:

Q. I say, isn't it repeated over and over again?

A. No.

The Court: The objection is overruled.

Mr. Williamson: Exception.

A. No, there is no cycle in there that is repeated over and over again.

Mr. Ely: I think that is about all, Your Honor.

Mr. Ely: Just one more question.

Q. There are four fans in the Smith machine, are there not?

A. In the Smith?

Q. Yes.

A. Yes, four fans.

Q. And there are four fans in the Snow machine?

A. There are four of these agitators,—if you want to
560 call them fans.

Q. Yes, in the Snow machine?

A. Yes.

Q Now, in the Smith machine, the air does not necessarily go back to the same fan from which it was delivered, necessarily, does it?

A. Not necessarily.

Q. And in the Snow machine the air does not necessarily go back to the same fan?

A. No.

Q. (Continuing): Which delivers it?

A. No.

Q. That is, in the Smith machine, in taking in a body of air, it may leave one fan and go back to another fan, and then to another fan, that is right, isn't it?

A. Well, that is corerct, but it must follow the same cycle in the machine; you have got to get down through the corridor and up to the trays, to get back to your fan.

Q. That is, it may go back on one side or the other?

A. Yes.

Q. And, in the Snow machine, the body of air as it leaves one fan may go back to one side of the machine or the other?

A. It may go any place.

Q. Yes, it may go back to the fan on the opposite side of the machine, or not, that is correct, isn't it?

A. It may go any place.

561 Mr. Ely: That is all.

Redirect Examination.

By Mr. Williamson:

Q. Professor Rowley, when you tested the Snow specimen of the Smith machine last Sunday, without the curtain, was the intake in its usual form, wide open, the air intake?

A. Yes; everything was just as the previous tests were made.

Q. And the outlets were wide open, were they not?

A. Yes, sir.

Q. There are no controllers of any kind for either the air inlets, or the air outlets, in the Smith machine, are there?

A. No.

Q. If you take any one point in the Snow machine, between the trays, for example, is there, or does the air ever pursue a repeated path, or in a constant direction, or does it change?

A. Well, I would have to say this: To answer that question, you take any point between the trays, and you might find a point beyond where it goes,—this air, of course, goes in one direction continuously, or nearly so; you might find other points where it fluctuates back and forth, and vibrates in various directions.

Q. But, generally speaking, it goes in every which direction?

A. Generally speaking, it goes in various directions.

Q. Did you find, in your test, that there was some point at which it would change, and go for a while in one direc-
562 tion, and for a while in another direction?

A. Yes, there were points at which it goes in and out, or up and down; it changes direction in many points during the continuous operation.

Q. Do you consider that these colored sheets that Mr. Ely showed to you, where he had coloring put in, as to his idea of the representation of the movement of the air in the Snow machine, to be correct or fair?

A. Well, I think these sheets were taken at a specific point, and confined to one specific place, where there was more air movement in one direction than the other,—in order to lay a basis for direct air currents; and, of course, you can separate in any agitated space of air, which is agitated by a regularly moving agitator or fan, or anything like that,—you can always find sections in there which you could analyze to show the general motion, or the general movement of the air, and I think that that is what these diagrams have done; having taken specific sections, and tried to emphasize them.

Q. But, with respect to the general circulation of the air in the Snow machine, are these colorings fair or representative?

A. No, not as to the general circulation.

Mr. Williamson: That is all.

Mr. Ely: That is all.

The Court: We will adjourn until two o'clock this afternoon.

(Hearing adjourned until two o'clock this afternoon.)

---

563 (Afternoon Session, November 23, 1932, 2 P. M.)

Mr. Williamson: May it please Your Honor, I ask that Professor Frank B. Rowley be recalled to the stand.

Frank B. Rowley, recalled, testified further as follows:

Direct Examination.

By Mr. Williamson:

Q. I have here a patent, Your Honor, which is set up in the answer and in my response to the order to state what I would rely on this patent was included. Until last night I had not had time to read this patent myself. I have so many other things to do in the handling of this case and that is the reason

why this was not considered when Professor Rowley was before on the stand. I ask you to inspect, Professor Rowley, the copy of the Schwartz United States Patent 535,175, of March, 1895, and state to the Court in your own way what the disclosure of that patent is.

Mr. Ely: Oh, I think that is objectionable, Your Honor. That is not redirect examination.

The Court: It is starting into it over. As a rule we don't go over it again in redirect.

Mr. Williamson: I am not going over any patent I asked him about at all because this patent wasn't before him.

The Court: I would have a right to rule it out. I am not going to, but when you put a witness on the stand you should get through with him and if he is recalled it should be
564 only on matters in redirect examination which the cross-examination brought out. Do you intend to pursue this to any extent?

Mr. Williamson: No, sir. This is the only one and it will only take a few minutes.

The Court: All right. I will allow it.

A. To explain briefly the use of the apparatus, which is stated as a method or apparatus of ordering tobacco.

The Court: Is this the same patent we had before?

Mr. Williamson: No, Your Honor.

The Witness: This is another one, Your Honor.

Q. This is another one for conditioning tobacco, but it is much more elaborate as to heating and moistening and so forth.

A. I would refer to Figure 5 on sheet 5 of the drawings. That represents a vertical cross-section of the apparatus as disclosed and shows racks of tobacco on each side of a central corridor through there. The tobacco is hung on these racks and they are rolled in and out into those compartments. These are large sized racks. At the top center of the corridor is a propeller there or fan B.

The Court: Yes, I see it.

A. Which in this case rotates, drawing the air upward, and from there it splits and goes to the right and left as far as this cut is concerned and over to the sides where it

passes downward and it may pass clear down to the
565 floor—clear down to the lower part where it comes in contact with some water pans, C, on either side.

The Court: Yes.

A. And then it passes—that part of it will pass under the partitions on the outside or division walls which are shown up under the tobacco racks where it comes up through the tobacco. Now, some of that may go up at different places and comes out into the central corridor at different places up through those openings as shown by the arrows. The openings are in the partitions A-9 and A-10. Now, it comes up through here, some of it out there and some there, it goes all around into the circulation again. The pipes, C-2, which are shown in the lower right and lower left hand corner are heating pipes in the water pan and above those water pans are two special devices shown as C-3 for spraying water into that downward current of air as it passes down the outside corridors. It is—there are other modifications of it, of the device which—one of them is shown in Figure 3, the corresponding section in which the circulation is substantially the same, but the air is carried there by pipes or conduits which are shown as B-4 and B-5 at the sides of the tobacco trays instead of coming down that open corridor and that air also passes down and across or passes over, then it passes through those tobacco racks which may be—and it may cross over or go up through there and in the central corridor. It
passes—there is also a humidity of water pan with
566 heating pipes C-2. Another modification of the same device is shown in Figure 1 of sheet 1. Now in that case this particular drawing, there is only one rack of tobacco shown on the right and then—there is a rack of tobacco on the right, and then—there is a partition shown in A-2, in section, which divides the rack from the left hand side of the apparatus here. The propeller is shown at B at the top. In this case it is in a horizontal, that is the shaft of it is in a horizontal position so that it draws the air through into the chamber at the left where it forces it down over some coils C, marked C prime. Those are cooling coils for the purpose of regulating the humidity in the air; if it is too much, for the purpose of condensing it out; and down below those coils are the humidity pans or heating coils shown at C-2, the bottom here, and the circulation of air comes down through underneath that partition A-2, as shown here, and up through the tobacco. Or in other words it makes a cycle down on the left and up on the right. Now if I may read just for a mo-

ment from the description. I would like to quote from line—the purpose of it, from line 19, page 1, of the specifications, starting after the comma: "To provide an efficient method of ordering tobacco by circulation and recirculation, which consists in presenting air of one temperature to water of a different temperature in a chamber to cause the latter to be combined so as to produce a humid atmosphere which is forced into the presence of the tobacco absorbing the humidity of the air and again conveying the same into
567 the presence of water to revivify the same and presenting to the tobacco to effect the complete ordering thereof, and, third, to provide suitable apparatus for the conduct of the method of ordering tobacco of my invention.

"My invention stated in general terms comprises a method of ordering tobacco by circulation and recirculation which consists in presenting air of one temperature in the path of water of a different temperature to produce a humid atmosphere and presenting to suspended tobacco in such manner as to cause an absorption of the humidity of the air thereby and conveying the air deprived of its humidity to water to supply the same with humidity and presenting again to the tobacco to effect complete or thorough ordering of the same."

Now, if I may just skip to page 2, line 39, "In the operation of the apparatus of Figs. 1 and 2, the air is forced by means of the propeller or agitating device B," (that refers to this fan device up here. They call it a propeller or an agitating device), "into the chamber a, and the temperature of the water in the chamber a, being raised by means of the steam coil c^2, so as to cause the air therein freed from the agitating influence of said device D, and in a more or less calm state."

I won't quote any further than that, I guess, but that continues describing the apparatus, and then if I might turn to page 3, I might read line 43, beginning at claim 1.

"The method of ordering tobacco, which consists in continuously presenting air of one temperature in a chamber to water of another temperature to produce a humid
568 atmosphere conveying the same into the presence of tobacco to effect dampening thereof, and causing successively the air deprived of its humidity to be revivified and again presented to the tobacco to effect ordering thereof, substantially as described."

I will read just one more claim, claim 7, page 3.

"An apparatus for ordering tobacco, comprising a housing provided with two communicating chambers, a blowing or forcing device for circulating and recirculating air, a water tank or trough provided with a heating device, and means for supporting tobacco in said housing, substantially as and for the purposes described."

Mr. Williamson: The patent identified by the witness, to-wit, the Schwartz patent, 535,175 of March 5, 1895, is offered in evidence on behalf of the defendant to be marked Defendant's Exhibit T, and a request is made that it be bound in with the other patents of the portfolio.

The Court: Received.

(Defendant's Exhibit T marked for identification by the reporter.)

Mr. Williamson: This Schwartz was not a reference on the file wrapper record of the Smith patent in suit but it was introduced in evidence in some of the other suits and referred to in some of the other decisions and particularly emphasized in the decision of Judge Hickenlooper in the Petersime case.

(Witness excused.)

---

569 Mr. Williamson: In the early stages of taking of testimony I referred, Your Honor, to transcript of record in what we call the Boling case, which had in it a drawing, headed "Incubator of E. H. Snow, Sleepy Eye." I stated I would procure a photostat of that drawing, and have done so and I now offer it in evidence—or did I offer it then?

The Court: We can have it marked in lieu of the other.

Mr. Williamson: Yes.

The Court: You better have it marked.

Mr. Williamson: I don't know whether I offered it or not.

Mr. Ralph Williamson: No, it wasn't.

Mr. Williamson: Defendant's Exhibit U, and with the words "Drawing entitled Incubator of E. H. Snow, Sleepy Eye, Minnesota", taken from the transcript of record in the Boling case. I think it was the Buckeye Incubator Company and Samuel B. Smith versus Bert S. Boling. That was just, Your Honor, to see that you understood what was in issue in one of the other cases.

The Court: Received.

(Defendant's Exhibit U marked for identification by the reporter.)

Mr. Williamson: One of the cases under this Smith patent which reached the Circuit Court of Appeals of the Sixth Circuit is what we have been designating as the Petersime case, and I have here a copy of the United States
570 Patent 1562787 of November 24, 1925, granted to Harry M. Petersime, and which I understand discloses the structure which was employed by the defendant in that case according to the description thereof which appears in the decision of the trial court in that case, Judge Hickenlooper, and I offer that in evidence to be marked Defendant's Exhibit V, and with the words Petersime Patent, 1562787, November 24, 1925. That is simply to help you to better understand that case.

The Court: Received.

(Defendant's Exhibit V marked for identification by the reporter.)

Mr. Williamson: Defendant rests.

(Recess.)

Mr. Williamson: May I have just a second before you go on. I have nothing available now, Your Honor, to show the defendant's structure in the Blom case, but I have written to defendant's counsel in that case for transcript of the record of appeal, and when it comes I ask permission to show it to you or leave it with you.

Mr. Ely: I object to that, Your Honor. I think everything should be here.

The Court: Well, we will have to have the case completed, that is as far as the trial is concerned, now.

---

571 Plaintiff's Rebuttal Case.

LENA LAUX's Testimony.

Lena Laux, a witness called on behalf of the plaintiff in rebuttal, testified, under direct examination, on pages 617 to 628, and under cross-examination on pages 629 to 643 of the typewritten trial record, which is here reproduced in full.

572 Lena Laux, sworn on behalf of the Plaintiff in rebuttal, testified as follows:

Direct Examination.

By Mr. Ely:

Q. Please give your name and residence.

A. Lena Laux, Mankato, Minnesota.

Q. You will have to speak up a little bit. Speak up a little louder. A. Lena Laux, Mankato, Minnesota.

Q. You are of legal age? A. Yes.

Q. What is your occupation now?

A. I am not doing anything now.

The Court: What did she say?

Mr. Ely: She is not doing anything now. Will you speak up a little louder.

Q. Did you ever work for Mr. E. H. Snow, the defendant in this case? A. Yes, I did.

Q. During what period?

A. From March, 1925, to the end of January, 1930,—no, the end of the year, 1930.

Mr. Williamson: I can't hear a word she says, Your Honor.

The Court: Well, repeat it. I can't give her a louder voice than she has.

573 (Question and answer read by the reporter.)

Q. What were your duties while you were working for Mr. Snow?

A. I did the bookkeeping and wrote out the egg checks, and waited on customers.

Mr. Williamson: There it is again, Your Honor. I can't hear a word she says.

The Court: Have your son repeat it to you. I can't give her a bigger voice than she has got. She said she was doing bookkeeping for him during that time.

Q. Go right ahead, and say what your duties were.

The Court: Please speak as loud as you can. He can't hear.

A. I did the bookkeeping and wrote out the egg checks and took care of the correspondence.

Mr. Ralph Williamson: Wrote out the egg checks and took care of the correspondence.

Mr. Williamson: I want the witness to talk louder.

The Court: Well, I don't know how to make her talk any louder.

Mr. Ralph Williamson: If I repeat it after—

Mr. Williamson: No, no, if anybody repeats it let the reporter repeat it.

Q. During how much of the year did you work for Mr. Snow of each year?

A. Well, I worked—I usually was laid off three
574 months of the year during the summer, but the last year I worked all year.

Q. Was there anyone else in the office besides yourself, any other employees in the office besides yourself?

A. No, there wasn't.

Q. Did you get around Mr. Snow's plant in the course of your duties? A. Yes, I did.

Q. Did you get downstairs in the cellar?

A. Yes, I did.

Q. In the period from 1925 to 1929, how many incubators did Mr. Snow operate?

Mr. Williamson: The question is objected to as incompetent. It has not been shown that this witness knows anything about his incubating business or had any opportunity to see anything about his business.

The Court: Overruled.

Mr. Williamson: Exception.

Q. Now will you state during the period from 1925 to 1929, how many incubators did Mr. Snow operate at Sleepy Eye?

A. Well, there was five and I think there were six. I am not sure about the sixth one. Three of—well, when I came there there was two of Smith's on the first floor and three of his home-made ones in the basement. I am not sure about the third one, but I do know there were two there.

Q. And during this period do you know whether he
575 operated all of these incubators in the hatching of chicks? A. Yes, he did.

Q. Did you ever get into any of those machines that were in the cellar? A. Yes, I did.

Mr. Williamson: Objected to as incompetent and immaterial. It has not been shown that this woman is qualified to understand an incubating machine.

The Court: He hasn't asked her anything about that. He has asked her if she got into one of those machines.

Mr. Williamson: Yes, all right.

Q. Did you ever get into the Smith's that were on the first floor?

Mr. Williamson: Question objected to for the same reason.

A. Yes, I did.

The Court: Overruled.

Mr. Williamson: Exception.

Q. In general how did the appearance of the incubators that were in the cellar compare with the Smith's that were on the first floor?

Mr. Williamson: Objected to as absolutely incompetent. It does not appear that this woman knows what a Smith machine is, nor what a Snow incubator is.

The Court: Of course that may be true, but she can give the general appearance of it.

576 Mr. Ely: Didn't you answer my question?

The Court: Answer it over. I didn't hear it.

Q. Didn't you answer that last question before Mr. Williamson interrupted?

A. I think I did, whether I had been in the machines?

Q. Yes.

A. Yes.

Q. And how did those machines that were down in the cellar compare with the machines that were upon the first floor?

Mr. Williamson: Question objected to as not only incompetent, but immaterial.

The Court: Overruled.

Mr. Ely: She has answered the question twice.

The Court: Repeat the answer now.

A. They looked just the same as the Smith machines.

Q. When you went in the machines did you feel a draft of air in the machines which were in the basement?

Mr. Williamson: Now, she didn't say she went into the machine.

The Court: Yes, she did.

Mr. Williamson: Oh, did she? Well, I will take it back then.

Q. Did you feel a draft of air?
A. Yes, I did.
Q. Were there fans in those machines that were down in the basement?

577 Mr. Williamson: Objected to as leading, grossly leading.

A. Yes.

The Court: Overruled.

Mr. Williamson: Exception.

Q. Do you know how the fans were located?
A. Overhead.
Q. Were there egg trays in those machines which were down in the basement? A. Yes.
Q. How were they located and arranged compared with the location and arrangement of the trays in the Smith machine?
A. Well, they hung on chains—

Mr. Williamson: Same objection, Your Honor. This woman hasn't stated that she knew the difference between the Smith machines and the other machines.

The Court: She may answer that question. Anybody could answer that question looking at that machine. Overruled.

Mr. Williamson: Exception.

Q. Do you know whether there were any hatching trays in those incubators downstairs?
A. Yes, there were.
Q. Where were they located?
A. In the machines hanging slant on chains.
Q. How about the nursery trays?
A. They were at the bottom.
578 Q. And in that respect they were like the Smith?
A. Yes, they were.
Q. What about the outside appearance of these three machines that were in this cellar?
A. One was grey.
Q. One was grey. What about the others?
A. They were a dark shade.

Mr. Williamson: I can't hear a word she says, Your Honor.

Mr. Ralph Williamson: They were a dark shade.

Q. Did Mr. Snow carry on commercial hatching in those machines?

Mr. Williamson: Objected to as incompetent.

A. Yes, he did.

The Court: Overruled. I think anybody, any person whether an expert or not, could tell whether or not he did that if they were aware of the fact.

Mr. Williamson: She don't know what commercial business is.

Q. Do you know the extent to which these machines that were in the cellar were operated?

Mr. Williamson: The same objection.

The Court: Overruled.

Mr. Williamson: Exception.

Q. I will put it this way: Were they operated experimentally?

A. No, they were operated to hatch chicks and sell
579 them, ship them out for orders.

Q. During what years?

A. During all the years that I was there.

Q. Were these machines ever torn down while you were there? A. No, they were not.

Q. How were the eggs and chicks handled back and forth between the machines that were down in the cellar and the office?

A. Well, the eggs were taken down cellar and trayed up down there and pushed into the machines and when the chicks hatched they were carried up by the men.

Q. How many approximately; were there one or two boxes of chicks that were brought up from the cellar or were there a number of boxes of chicks brought up during the time you were there?

A. There were hundreds of boxes.

Q. And that applies during the years you were there?

A. Yes.

Q. Did you have what was known as a setting book?

A. Yes, we did.

Q. What did you keep track of in that setting book?

Mr. Williamson: She said—she didn't say she kept it.

A. The number of trays that were set in each machine.

Q. Did you keep track in that book of the number of eggs that were set in those machines that were down in the cellar? A. Yes.

580 Q. Who kept that book?

A. Why, it was left on the desk. I had to use it every day to fill orders.

Q. Can you hear what she said?

The Court: She said the book was kept on the desk and what else did she say?

The Witness: I had to fill orders with it. I had to look at it every time I filled orders.

Mr. Williamson: I can't hear.

The Court: She said she had to fill orders with it; she would look in that book and fill orders from that book.

Q. Were the several machines Snow had at his plant numbered? A. Yes, they were.

Q. And how did you keep track of the setting of eggs in the particular machines?

A. Every machine had a number.

Q. And when you made a record of the setting of eggs did you make a record in your book of the machine that they were set in? A. Yes, I did.

Mr. Ralph Williamson: Object to this. The witness has not testified she made the records of the setting of the eggs in that book.

The Court: Well—

Mr. Ely: I thought she did.

Q. Did you or did you not keep that record in the
581 setting books?

Mr. Williamson: Why didn't you say incompetent there?

Q. Were there any precautions taken in the plant to conceal the operations which were going on in the cellar? If so, state what they were.

Mr. Williamson: The question is objected to as immaterial.

A. Yes, they were.

The Court: Overruled.

Mr. Williamson: Exception.

The Court: Go ahead.

A. The door was kept partly covered with a sweater so the door knob wouldn't show and it was understood that the help shouldn't let anyone know that there was any machines down there.

(Answer read by the reporter.)

Mr. Williamson: The first words there of her answer was "none." Did you get that?

The Court: I don't think so.

Mr. Williamson: That is the way I understood it.

Q. What about bringing chicks up from the cellar? Was there any instructions or any custom with regard to bringing chicks up from the cellar?

A. It was understood the help shouldn't bring up chicks when there were customers in the store.

582 Q. Do you know or have you any idea of the approximate number of chicks that were sold that had been hatched in those machines that were down in the cellar?

A. There were thousands of them every year. I don't know just how many.

Mr. Williamson: Now, she said she didn't know how many. Have you got that down?

The Reporter: Yes, sir.

Q. Well, I didn't expect you to know the exact number.

Mr. Williamson: No.

Q. Now in order better to locate those three home made machines, in what part of the cellar were they located?

A. Well, they were in the old basement as you go down the stairway on the left hand side.

Mr. Williamson: All I could hear was—

Mr. Ralph Williamson: I will give it to you. They were in the old basement as you go down the stairway on the left hand side. Is that correct?

The Witness: Yes.

Q. Where was this door you speak about that was covered with a sweater?

A. It was upstairs.

Q. Do you know when Mr. Snow built the machine in which the fans were on the side walls?

A. In the year of 1929.

Q. And do you know what was done with the Smith
583 machines that were upstairs after these machines were built which had the fans in the side walls?

Mr. Williamson: The question is objected to as immaterial. I don't think the witness said there were any upstairs.

A. The two on the first floor?

The Court: Overruled.

Q. Yes.

A. They were torn down and moved to some other place. I think it was Montevideo.

Mr. Williamson: I can't hear a word she said.

The Court: She said they were torn down and moved to Montevideo.

Mr. Williamson: Thank you.

Q. And after those Smith machines were moved out, what machines did he use during the next hatching season?

A. He used those that he made last.

Q. How many of those machines did he use?

A. Three of them.

Q. Did he or did he not use the three machines that were in the other part of the cellar?

A. Yes, he always used them also.

Q. What part of 1929 did Mr. Snow build these machines that had the fans in the side walls?

A. He started in the fall.

Mr. Ely: That is all.

584 The Court: You may cross-examine.

Cross-Examination.

By Mr. Williamson:

Q. Now, if I understood your testimony correctly, you said you worked for Mr. Snow from 1925 to 1929, did you not? A. 1930.

Q. How long did you work there in 1925?

A. From March until, I think, about the first of July.

Q. About the first of July? A. Yes.

Q. How long did you work there during 1926?

A. I think I started in the fall of the year. I don't remember. It was November or sometime along in there.

Q. November? A. I think so.

Q. November the only month you worked there?

A. Well, during all of the hatching season until the next July.

Q. During the hatching season from July to November?

A. From November to July.

Q. From November to July? A. Yes.

Q. What is the year? A. 1926.

Q. 1926. How long did you work there in 1927?

A Well, we usually started about the same time every year.

585 Q. Same time of the year?

A. About the same time, yes.

Q. Every year? A. Yes.

Q. Well, when did you start then?

A. About—well, I don't know the exact dates, but I think it was October or November.

Q. Have you got any record with you by which you can fix the date? A. No, I haven't.

Q. Any books or anything of that kind?

A. No, I haven't.

Q. Any record of any sort? A. No, I haven't.

Q. You are just depending on memory, are you not? You are depending solely on memory, are you not, for dates or time? You have no record by which to fix those dates here with you, have you?

The Court: Have no books or anything of that kind?

The Witness: No, I have no books. No, I know that.

Q. How long was it in the year—

The Court: The last time she said she was there from November 1925 to July in 1926, didn't you?

The Witness: 1925, I started in March.

The Court: And worked until what time?

The Witness: Until about July.

586 The Court: Then when did you start to work for him next?

The Witness: I don't know. I think it was in the fall of the year.

Mr. Ely: I can't hear what you say.

The Witness: November, I think.

The Court: November of 1925?

The Witness: No, 1926.

The Court: How long did you work then?

The Witness: Until the end of the hatching season.

The Court: When was that?

The Witness: Until about the first part of July.

The Court: You worked then from November, 1926, to July, 1927?

The Witness: Yes.

The Court: Now go on.

Q. How long did you work there in 1928?
A. About the same time.
Q. About the same period? A. Yes.
Q. Did you work there in 1929? A. Yes.
Q. How long did you work there?
A. About the same time during the hatching season.
Q. During the hatching season?
587 A. Yes.

The Court: That commences every year in November or December?

The Witness: We got out the advertising and started about that time.

Q. There was no hatching done in the month of November and December, was there? A. No.
Q. Your employment wasn't on the hatching then during those periods of time?
A. No, we got out advertising.
Q. What advertising?
A. Well, whatever there was to do.
Q. Did you have anything to do with the advertising?
A. Yes, I did.
Q. And as a matter of fact didn't you get the advertising all mixed up? A. No, I didn't.
Q. Weren't you discharged on account of your mixing up of the advertising for that concern?
A. No, I wasn't.
Q. What is that? A. No, I wasn't.

Q. You were discharged, weren't you? You were fired, weren't you? A. No, I was not.

588 Q. What is that? A. No.

Q. How is it you aren't there yet then?

A. Well, Mr. Snow wanted to put in some of his relatives.

Q. In other words, he fired you. He stopped you from working there, didn't he?

A. No, he didn't.

Q. He didn't continue to employ you, did he? You were discharged, were you not? Answer that question, please.

The Court: Don't be scared about it. Just answer it.

The Witness: Well, I wouldn't put it that way, no.

Q. Well, weren't you put out?

A. Well, yes.

Q. And why were you put out?

A. I don't know.

Q. Wasn't it because you got the advertising all mixed up? A. No, it wasn't.

Q. What reason do you think you were put out for?

A. I don't know. We had no trouble of any kind.

Q. You say that you kept the records of the number of chicks that were hatched while you were there?

A. I didn't say that.

Q. You didn't say that? A. No.

Q. Who did keep the records?

589 A. Nobody did.

Q. Nobody kept a record of the number of chicks that were hatched, do you mean to say that?

A. Well, I got—I booked the orders.

Q. That wasn't my question. Was any record kept of the number of chickens that were hatched while you were there and throughout the whole period that you were there?

A. Not exactly, no.

Q. And was there any record kept of the number of chicks that were sold?

A. Well, we had the orders to go by and that was—

Q. Was any record kept and, if so, did you keep the record?

A. Well, I did the book work, and got out the orders, yes.

Q. But the question was whether you kept any record of the sales of chicks? Did you, yourself?

A. Well, I had the books where the orders were—the chicks were shipped and I would know in that way.

Q. That is the only way and that is the only record you had anything to do with, was it?

A. Well, that is all we had.
Q. You say you kept that? A. Why yes.
Q. Wasn't Mrs. Snow employed there at the same time?
A. She helped, yes, but—
Q. Wasn't she in charge?
A. She wasn't there a good deal of the time.
590 Q. When she was there it was part of her business to keep the records of those chicks? A. She helped.
Q. Was she in charge of it? A. No.
Q. Were you over her?
A. I wouldn't say I was over her, but I did most of it.
Q. Did you give orders to her?
A. I wouldn't say I did, no.
Q. She did that, didn't she?
A. She wasn't there most of the time.
Q. What do you mean she wasn't there most of the time?
A. She was gone so much of the time.
Q. You say you kept the records of the orders, didn't you, on sales? Which was it? Did you say the record of the orders or the sales? Which was it that you kept?
A. Well, our orders were in the book and I kept the books.
Q. The orders were where? A. In the books.
Q. And is that what you kept? But you didn't keep any record of the sales, did you?
A. Just what sales do you mean?
Q. I mean sales of the chicks.
A. Why, that is the record, isn't it?
Q. The order is the only record you got. How many chicks were hatched there during the first year of your employment?
591 A. I don't know. We didn't figure that up.
Q. How many were hatched the second year?
A. We didn't figure it up.
Q. How many the third? A. We didn't—
Q. How many the fourth?
A. I say we didn't keep that record.
Q. How many? At least you don't know, do you?
A. Well, I didn't figure it up.
Q. You don't know then, do you, from memory?
A. Well, I have an idea.

Mr. Ely: State it.

Q. You have no definite idea as to the exact number, have you? A. They must have—
Q. Do you have an idea how many then? What is your idea? A. Why millions of them.

Q. In what length of time? You mean through the whole period? A. No, every season.

Q. Millions in every year? A. Yes.

Q. By actual count? A. (No answer.)

Q. Millions every year. From whom did you take your orders while you were employed there?

A. Mr. Snow.

592 Q. Mrs. Snow? A. Mr. Snow.

Q. Didn't you take orders from Mrs. Snow also?

A. Sometimes.

Q. And was Mr. Snow there most of the time that you were there?

A. Why, he was gone a good deal while I was there.

Q. He was there looking after his business nearly all of the time, wasn't he?

A. Why he used to drive to the other plants nearly every day.

Q. Yes, back and forth.

A. Yes.

Q. And he was looking after it all of the time, wasn't he?

A. (No answer.)

Q. Were there any other girls employed there at the same time you were? A. Yes.

Q. Name all that you can think of.

A. Viola Ebelseizer.

Q. Any others? A. Miss Cotton.

Q. Any others? A. Tillie Marquadt.

Q. Any others? Is that all?

A. No, that isn't all. There is more than that.

593 Q. That is all you can think of, is it?

A. Well, I can think of more if you give me time. And the Haskin girls, two of the Haskin girls. And then during the advertising time there were more than that, but they were only there for a short time.

Q. What other girls were there the first year you were there? A. Viola Ebelseizer and Miss Cotton.

Q. What girls were there the second year you were there?

A. Viola Ebelseizer and Tillie Marquadt.

Q. What girls were there the next year you were there? That would be the fourth year.

A. Viola Ebelseizer. Oh, I don't just remember that other one that worked a few days. I don't remember the other one. I just—

Q. What girls were there the last year, the fifth year you were there? A. Viola Ebelseizer was there.

Q. Who? A. Viola Ebelseizer.

Q. Is that all?

A. Well, we would have different ones in—
Q. Well, is that all that you remember?
A. Just now. There were more.
Q. Name them, if you know.
A. I mean just during the advertising season.
Q. Well, what is her name?
594 A. Well, the two Haskin girls and Mrs. Johnson helped and Mrs. Dolmeier.
Q. What year were those three people there that you have last named? A. 1930.
Q. 1930? A. 1930.
Q. That is the only year they were there, isn't it?
A. Yes, some of them.
Q. Now did some of these other girls have anything to do with the advertising? A. Yes.
Q. Was it under your control? Did you have charge of those girls that had something to do with the advertising?
A. Well, I don't say that I had charge of them, no. Why?
Q. Did they help you? A. Yes.
Q. Isn't it a fact that you had those girls and you yourself mixed up the advertising so badly that Mr. Snow had to discharge you? A. No, that isn't so.
Q. Didn't you mix up the advertising? A. I did not.
Q. Didn't you purposely mix up the advertising?
A. No, I did not.
Q. Didn't those girls do it at your orders?
595 A. No, I did not.
Q. How old are you? What is your age?

Mr. Ely: I beg your pardon—

Mr. Williamson: I think that I ought to know the age of this woman so as to know whether she is capable of understanding anything about these machines.

Mr. Ely: You are of legal age?

The Court: I don't know as I should require her to state her age. The Court can observe her age.

Mr. Williamson: What is that, Your Honor?

The Court: I say the Court can observe about her age.

Mr. Williamson: All right.

Q. Did you ever have any course in mechanical training relating to machinery?

Mr. Ely: I object to that.

Mr. Williamson: I think that I have got a right to find out.

The Court: I haven't supposed that she has, but she may answer.

Q. What was your answer? You never had any course in instruction in relation to how machinery was made and so forth, did you? A. Why no.

Q. That is what I thought. You never helped to construct machines, did you, of any kind?

596 Mr. Ely: Oh, I object to that—

Mr. Williamson: I think I have got a right to—

The Court: I will take it for granted that she is not a mechanic, and never knew how to make one of these machines and never made one. I didn't admit her testimony on the ground she was an expert. As far as I admitted it I thought anybody who had common sense could say so.

Q. You spoke in some of your testimony of a Smith machine as having been used there by Mr. Snow, and then you said there were some other machines used there by Mr. Snow, did you not? A. Yes.

Q. Do you know the difference between the Smith machine and the Snow machine that you saw there?

A. Well, I mean those old machines that he made.

Q. I mean the structure and the operation of them. You don't know that, do you?

A. Well, they looked just like the Smith machines.

Q. You couldn't describe it, could you? You couldn't tell the way in which those different machines operated, could you? A. Why—

Q. You don't pretend to be able to describe how those machines operated, do you?

A. What way do you mean?

Q. And the differences between them.

A. What way do you mean?

Q. I mean the way the machines operate when in use.

597 A. By fans.

Q. By what? A. By what or how?

Q. I asked you whether you can give a general description of them. You are not a mechanic, are you?

A. No.

Q. And you can't describe those machines, can you? Answer the question.

A. In what way should I describe them?

Q. I am asking you whether you can describe them. I am not telling you how to describe them. Can you describe them?

A. Why, yes, I can describe them.

Q. Describe them then in your own way and state the differences between them.

The Court: If you want to, go ahead and describe, for instance the Snow machine.

Mr. Williamson: Beg pardon?

The Court: Tell her to describe one kind at a time.

Mr. Williamson: Well, I don't think she knows the difference between the kinds.

The Court: Well, describe the Smith machine.

Mr. Williamson: I have asked her if she knows the difference between the kinds and she said she didn't.

The Court: All right.

Q. Now, go ahead and describe anyone that you know there that was used there while you were employed there.

598 A. Well, the trays are put in and they are slant; they hang on chains and they are run with a fan. Well, that is all there is, isn't it?

Mr. Williamson: Did you get that down? She says that is all there is, isn't it? That is all.

Redirect Examination.

By Mr. Ely:

Q. Did Mr. Snow give you a recommendation after you left him? A. Yes, he did.

(Witness excused.)

---

599 CLARENCE J. HOLMES' Testimony.

Clarence J. Holmes, a witness called on behalf of the plaintiff in rebuttal, testified, to the following effect:

Under Direct Examination.

He stated that he lives at Jasper, Minnesota, and that his present occupation is the "selling of poultry remedies and culling chickens". Says he lived at Sleepy Eye, Minnesota, from January 1927, until 1929, and while there worked in an oil station some, and in Harold Davis' hatchery for "a few years".

Says that Snow was running a hatchery in Sleepy Eye during that period and he once went into his hatchery to see how

he was setting his eggs, and saw the machines which he had. Says it was in the middle of the day, sometime in May 1927. Says Snow had two Smith machines on the first floor. Says that he went into the cellar on this trip and saw there two machines, which in size were practically the same as the machines upstairs. Says the two differed a little in their outward appearance, as one had a metal construction covering the outside. Says they were practically of the same size.

Being asked whether he "saw into either one of these machines", he says that he did on one only. Says there was a man opened the doors and carried eggs into the machines while he was there, and says he saw this man turn on the lights right over the door, and he saw trays hanging on the chains with eggs in them, and he also saw fans located overhead. Says this occurred in the basement "under the old building". "The new building was not there at the time I was there".

600 Says the machine of which he saw the inside was running as he could see the fans rotating and feel the heat. Being asked whether the other machine was running or not, his answer was "I could hear the fans from the outside". Said he did not see any curtains in that machine. Says the egg trays were hanging on chains, some of them being slanted and the others straight. Says the door of the incubator was located "on the east side facing New Ulm". Says he saw the man walk into the machine. Says Snow was not there at the time he was there.

Says there was a sack or blanket of some kind over the doorway to the cellar stairs. "It hung right over the door as you went downstairs".

Under Cross-Examination.

The testimony given under cross-examination, consisted of a single question and answer, reading as follows:—

"By Mr. Williamson:
Q. How long were you there at that time?
A. In the hatchery I presume about ten minutes."

---

601 MALCOLM G. REYNOLDS' Testimony.

Malcolm G. Reynolds, called as a witness on behalf of the plaintiff in rebuttal, having been first duly sworn, testified to the following effect, to-wit:—

Under Direct Examination.

States that he lives at Worthington, Minnesota, and that his occupation is an automobile mechanic.

Says that he worked for Mr. Snow, as he recollects it, in the latter part of June, 1930, until September of the same year, selling remedies and checking over flocks of chickens.

Being asked whether he ever went through the Snow hatchery at Sleepy Eye, he answered "Yes, sir". Said he saw it first in the middle or fore part of May, 1913. He says that this was before he began to work for Mr. Snow. Did not yet know Snow.

Being asked what his object was in going into the hatchery, he answered,

"Merely to go in and see the hatchery and look around, that is all".

Says he went down into the cellar. Being asked whether there were any incubators there in the cellar, he answered "Yes," and that according to his recollection "there was six of them". States that three of these were in the new part of the basement and three in the old part of the basement. Says the old part of the basement was on the left side as a person went downstairs.

Being asked whether he could state the construction of those machines which were on the right, he answered,

"They were ventilated from a fan circulating type driven from the motor on the side—wheel driven."

602 Says the fans were on the inside—on the side walls on the inside.

Then, having been asked to "go over to the left hand side of the cellar", the witness answered that he went through a door below the stairway to the left and saw those machines. Being asked if he knew how those were constructed, he answered:

"The machines from the outside, I think looked very much alike."

Says he saw the inside of one of the machines, and being asked to describe the inside of that machine, he answered,

"The machine I saw on the inside was ventilated from overhead draft and ventilating system from fans driven by the motor overhead."

Says there were eggs in the trays and the trays on each side of a corridor hung by chains. Says the fans were located directly overhead. Being asked whether there were any curtains on the sides of the corridor of these machines, he answered, at the time he was there, there was one curtain on one side, and that there were three fans running.

Being asked by the Court to state whether the machines had any names on them, the witness answered:—

"There was no names on them that I saw."

Being asked to state the external appearance of these machines, he answered:

"One of them was a little different color on the outside structure—it was like a metal cover, and one of them was wood—I believe. I believe it was wood."

Says that the color of the other one was grey.

There was no cross-examination.

---

603 HAROLD E. DAVIS' Testimony.

Harold E. Davis, a witness called on behalf of the plaintiff in rebuttal, having been first duly sworn, testified to the following effect.

Under Direct Examination.

States that he lives at Sleepy Eye, Minn., and has lived in Sleepy Eye and vicinity all his life. Had been on a farm until 1924, when he moved into Sleepy Eye. Says he has known Mr. Snow as long as Snow has been in Sleepy Eye.

Being asked what Snow was doing prior to 1924, Davis answered that when he first knew Snow he was employed as a tinner in a hardware store. Says Snow hatched about 1200 eggs for him in 1924, which eggs Davis got from his flock of chickens, and took the eggs to Snow's hatchery to get the chickens hatched. Said Snow had an incubator and Davis got into it when he was there to check up on his hatching. Says the outside of the machine was covered with galvanized metal. Says he was inside of that incubator "a number of times through the season", and knows the construction of that incubator. Being asked to describe it, the witness answered

"You enter a door in the middle of one side, which at that time faced south, and you walk down the corridor and the fans are overhead—the circulating fans overhead, and trays

on either side hang from chains with curtains in front of the trays."

Then being asked by the Court "About how large was the incubator on the outside approximately", the witness answered

"Well in actual feet, I couldn't say exactly."

604 Then being asked if he could make any comparison, the witness answered

"I know the size of the Smith and I know the size of that were the same." * * * * * * They were practically the same."

States that he had operated incubators commercially and is familiar with the construction of the Smith incubator.

Being asked to state how this incubator, seen by him in Snow's plant in 1924, compared with the Smith, the witness answered

"The hatching was the same; that is mechanically it is the same."

Says the eggs were set in individual trays with about 132 eggs and they were hanging on chains on each side of the corridor and below the turning trays were hatching trays. Says Snow set the eggs periodically so that they would not all hatch at once.

Being asked where Snow commenced setting the eggs, the witness answered

"I think they started at the top. Of course sometimes they were set at odd times as the eggs came in."

Says he again saw that machine after the hatching season of 1924 was over. Assisted Snow to turn the machine around. Being then asked whether Snow made any statement to him about that incubator, the witness answered "Yes". Then, being asked what did he say, the witness answered

"Well I was curious to see how the castings and the material for the incubator were and the castings is what I had in mind mostly, and, of course, he did not say how he got them, but he said he would get by with it".

The next question was "What did he say" and the witness answered. "He said to the effect that he was getting by with it".

605 Then, being asked to give Snow's words, or the approximate words used by Snow, the witness answered "I couldn't repeat the words".

The witness was then asked to give the substance of what Snow said, and the witness answered as follows:—

"To the effect he had found a way he could get his material without too much information and he could get by with it."

Then Davis testified that the Mr. Holmes, who had just previously testified, worked for Davis in 1927, 1928 and 1929, and that he heard his testimony given.

States that he recalls the visit of Mr. Holmes to the Snow hatchery, and being asked to state what he remembered about it, Davis answered as follows:—

"Holmes and I—he was working for me and we were becoming worried about being overstocked with chicks, so he decided he was going to see whether Mr. Snow was setting as strong or not—the idea was that if he was setting the eggs heavy, we would not set eggs."

Then Davis said that he was operating a hatchery at that time.

Under Cross-Examination.

Says that he, himself, ran a hatchery at Sleepy Eye in 1925, but was not running it in 1924. States that he had been running his hatchery ever since he begun in 1925, but this last hatching season he only operated one machine. Says he controls this one hatchery with its one incubator, and was running this at the same time Snow was running his hatchery, as a competitor of Mr. Snow from 1925 on to 1927. He states that he was also a competitor of Mr. Snow's in selling chickens.

---

606 JOSEPH I. TAGGART'S Testimony. (In rebuttal)

His testimony, under direct examination, runs from pages 663 to the top of page 681, inclusive, and his testimony, under cross-examination, runs from near the top of page 681 to the middle of page 691 of the typewritten trial record and all of his above identified testimony is here reproduced in full.

607 Joseph I. Taggart, recalled as a witness for and on behalf of the plaintiff, testified as follows:

Direct Examination.

By Mr. Ely:

Q. Mr. Taggart, have you ever measured the volume of air coming over the beams in a Smith incubator when the curtains are drawn back and out of the way?

A. Yes.

Q. How have you measured it?

A. I have measured it with anemometers.

Q. How do you get the volume, then?

A. You place,—a three inch anemometer will fit between the beams and the roof of the incubator; it will just go in there, and by placing the anemometer there a very few inches along through that space you can take the readings and then by multiplying that by the cross-sections, you can take the average reading; multiplying that by the cross-section you can get the volume of cubic feet per minute within approximate limits.

Q. How does the volume of air passing over the beams, when the curtains are withdrawn, compare with the volume of air which passes over those same beams when the curtain is in place?

A. When the curtain is withdrawn the volume going over the beams is slightly increased, if there is any difference; sometimes it does not show any difference; other times it shows a slight increase.

608 Q. Do you know why it should show a slight increase? Have you any idea upon that subject?

A. The curtains might offer some resistance to the flow of the air, and when the curtains are drawn back, it might be a little bit easier for the air to get out from in front of the fans and it would naturally draw in a little bit more if the exit was freer.

Mr. Williamson: This is supposed to be rebuttal. There has not yet been anything shown to indicate what it rebuts.

The Court: I think I know what it rebuts. It tends to rebut the testimony of Professor Rowley in reference to the flow of the air up, over and back into the fan.

Mr. Williamson: All right, if that is the intent of it.

Q. You heard Mr. Rowley testify today that the trays in the Smith, when he made this test, with the curtain removed, on Sunday, when he said the trays were in the same position as they were when we were down at Third Street. Do you recall hearing that testimony?

Mr. Williamson: Call it the Flour Exchange Building.

Q. At the Flour Exchange Building? A. Yes, sir.

Q. How were the trays in the Smith incubator when the tests were made at the Flour Exchange Building last week on Monday, when we were present?

609 A. All the time,—every time I have been there,—that is, when the Court was there and when we were making our demonstration, or during their demonstration, the trays were hanging as near horizontally, as they were able, —one side dropped down just slightly,—they were not turned so as to make free air passageways up between the trays,—between the tray columns.

Q. Would that affect the free passage of the air up, if a test were made?

A. It would.

Q. In what way would it affect it?

A. When the trays are not turned at the regular operating angle, the space between the trays is only about five-eighths of an inch, so that air column between the column of trays is practically closed off.

Q. Now, I gathered from Mr. Rowley's testimony that your drawings might be artistic, but they were not accurate. He criticised your drawings. Have you any answer which you wish to make with respect to those criticisms?

Mr. Williamson: That is a pretty general question.

The Witness: Yes, sir, I would like to answer it briefly.

Q. Will you do so briefly?

The Court: Well, it is the short way of doing it.

The Witness: I would like to first to refer to Exhibit 7, which shows a cross-section of the Smith incubator. In Professor Rowley's test, which he made in my pres-

610 ence, he tested the speed of the air as it came from the fan, and also the speed of the air as it passed under the hatching trays. Those tests, which he made in my presence, checked almost exactly with the information recorded here. When the fans are rotated,—

Q. Pardon me, what incubator are you talking about now?

A. With the Smith incubator, which was tested at the Flour Exchange.

Q. All right.

A. He made certain tests there of fan speeds, the volume of the air coming from the fan and the speed of the air coming from the fan and also the speed of the air going underneath the hatching trays. Those tests check almost exact-

ly with the information as I have it recorded here. A fan of this type, when it rotates, throws a cone-shaped current. The speed of the air delivered from the tip of the fan is a great deal faster than the speed of the air near the center of the fan. In other words, the fastest speed might be called funnel-shaped. Where this outer speed or outer moving air that passes and strikes the curtain, and turns down, the speed there is comparatively stronger than it is near the center of the corridor, and if one stands in the center of the corridor and takes an anemometer reading in the position, in the location where he referred to, where the speed is recorded here as five hundred feet per minute, and six hundred feet, you are getting readings very comparable to that.

611 Now, in regard to the air currents back of the curtains, I have been making tests at different times for several years, six or seven or eight years, on this very point, and I have used different methods. At one time, I made slits in the curtain near the height of the eye, that I could look through, and at other times I have taken two curtains and placed them together on the curtain rod, and as I wanted to move from one part of the machine to the other, I could move the two curtains along and look through the crack where I could separate the two curtains. When I was preparing for the exhibit, which we have on Thirteenth Street Northeast,—

Mr. Williamson: Minneapolis?

The Witness: Minneapolis,—I had a standard size sheet of celluloid, that was twenty by fifty inches sewed into a curtain. The speed of the air up through the trays, and in the air columns, between the trays, as recorded here, is the record shown by the three inch Biram anemometers of the type which I showed at the demonstration over here. Those anemometers are greatly affected by friction at the lower speeds. They still show direction, but it is necessary to have a big correction to take care of the low speeds. The manufacturers give you a correction chart for speeds from two hundred feet to a thousand feet. Below two hundred, the friction is of such consequence that they do not give you a correction chart for those speeds. In making
612 up these charts here, that is the speed that was recorded by those anemometers, and I have already stated on direct testimony that in the making of all of these charts, I did not make the corrections for friction. I gave the readings as given by the anemometers. I might say that this type of an anemometer is considered very accurate

at five hundred feet per minute. At higher speeds, we have to subtract, and the amount varies from zero up to forty feet per minute. As you decrease the speed below five hundred feet per minute, you have to add to, that is, the friction slows the instrument down, and the readings, as I have recorded them here, are accurate as recorded by the anemometers themselves. Now, I would like to refer to Exhibit E-12, which shows on the first a cross section of a Snow incubator that was built by us, and one that we tested over at the warehouse where we have our tests before the Court.

Mr. Williamson: There were no tests made at that time. I object to that statement, of any tests having been made at that time. The machines were simply shown to the Court without any tests.

The Witness: Very well. The machine was shown to the Court.

Mr. Williamson: That is all right. You mean the plaintiff's model of the Snow machine, do you?

The Witness: Yes, sir.

Mr. Williamson: We never saw any tests made.

613 Q. Go ahead.

A. In this Exhibit 12 there are several sheets, I think eleven in number,—they were entered as an exhibit at one time.

The Court: I suppose this should be rebuttal. Is this rebuttal?

Mr. Ely: It is simply put in to answer those criticisms of the drawings, but make it very brief.

Q. There was something said about arrows here.

A. On 12 AA, which shows the fans at the back of the trays, it was stated that it was impossible for me to get these readings and particular attention was called to the reading of 1350 feet per minute directly below the fan to the left,—that is, behind the hatching rack and within four or five inches of the floor. In the first place, there were paper ribbons put there to show the direction of the air at the floor. The fans were then stopped and an anemometer was put at right angles to the direction of the flow of the air, as shown by the paper ribbons, and the trays were returned to their regular place, and the fans started, and I then crawled in on top of the hatching racks, in front of the opposite fan so

I would not in any way interfere with the operation of the left hand fan. From that position, I could see the anemometer by means of a light, and could take its reading in lineal feet per minute. Now, in making all of these tests
614 on the rear wall, I first experimented and I found that the air in front of the fans covered by the area of the circumference of the fans was moving into the fan. I know from experience that when I stand behind the fan I do not materially interfere with the direction or quantity of the air that is being discharged from the fan. The records here show only the discharge from the fans. Now, after this record was compiled, I then worked on the air flow at other parts of the machine. Whenever I was working with the out-going air, I made it a point to not get in front or get into the flow of that out-going air.

When I was working with the in-going air, I kept out of the in-going air so as not to break up the flow of the air currents.

Q. Professor Rowley criticised you severely in regard to the use of arrows. What have you got to say as to your use of arrows?

A. An air current is invisible. They can only be shown diagrammatic. I know of no other way of showing them except by arrows. I have attended sessions of engineers that were dealing with air currents, and they illustrated them by arrows.

The Court: I do not believe Professor Rowley intended to criticise you for using them, but what he was criticising you for was that you were using the arrows to indicate something that he did not think you were able to ascertain.

615 The Witness: These twelve sheets,—there may be more than twelve,—these eleven sheets are all a part of the same exhibit. I know of no way,—

The Court: You better identify them.

The Witness: Exhibit 12. They are all diagrammatic. You cannot show a diagonal arrow as going diagonally through the plane on which your exhibit or drawing is made. When they are checked with each other you will find that they check very closely. They were made over a period of perhaps two months; one plane was completed weeks before other planes were started, and it is nothing more than natural that there would be slight errors at different points.

When I was making the horizontal planes, that is, EE, FF, GG, HH, and JJ, the trays were turned at an angle of approximately 90 degrees from the position in which they were the first time and we must have some apparent discrepancies. Now, I want to call particular attention to 12-FF, the arrows, as shown in here, are intended to represent the air current as near in that plane as possible. The trays were turned to an angle of 45 degrees from the horizontal, and anemometer readings are shown on the floor of the trays wherever the air current is cutting into the trays; that is, if we had it up at a 45 degree angle and the anemometer there has a plus reading, it means the air is going down towards the floor, but the anemometer was in an angle 45 degrees from it,—in other words, the air currents were coming out and cutting directly into the tray, and with
616 that explanation, there is no reason apparent to me for criticism of the particular point he brought out.

Q. Now, taking your direction of flow, as shown in your planes or horizontal section, is that subject to revision, to the vertical section in which some diagonal arrows are shown? A. Certainly.

Q. That is, you have to record the drawings in the horizontal and the vertical planes together in order to get the right direction, is that right?

A. Certainly. The entire exhibit is submitted as one exhibit and the different planes should be taken into consideration when making any interpretation of them.

Q. In an examination and study of a machine of this type, with an anemometer, how does that compare with using smoke and visual observation, in getting at the right and the true state of affairs?

A. In my studies I have used smoke, paper ribbons and the anemometer. You cannot determine speed by smoke. The anemometer is the best method of determining speed; that is, it is the best of those three and it is the only practical method for a problem of this kind. You can get direction more quickly with smoke and with paper ribbons, where you have conditions so that the paper ribbons will not foul or become entangled.

Q. How do your findings of a current movement of air in the Snow incubator compare, briefly, in a general
617 way, with such findings as Professor Rowley has made with smoke and a few anemometer tests?

A. Wherever he made anemometer tests, they check very closely with mine. His smoke test for directions check very closely with the conclusion that I had arrived at from check-

ing in the machines which we built. The area in which the air is flowing into the fan is practically the same; there might be a slight difference caused by the speed of the fan or the size of the fan, or the little difference in the outer wall, but, the air is flowing from the corridor to the fan over practically the same area, and it is flowing out from the fan over practically the same area,—the large portion of it going to the corridor where there is a general mixing and then is drawn back over the egg trays to the fans.

Q. Is there any way you want to make that clear or anything you want to use to make that last statement clear?

Mr. Williamson: Don't ask the witness to give us a lecture.

The Court: That is what you have been doing right along, both experts.

The Witness: I would like to use the model which shows the celluloid planes. I want to just compare that with the results that we have found at the Flour Exchange.

Q. Is this what you want?

The Court: Is this repetition?

Mr. Williamson: What is this rebutting?

618 Mr. Ely: You said Mr. Taggart's were entirely different from those of Mr. Rowley.

Mr. Williamson: I did not say entirely different.

The Court: Go ahead.

The Witness: At the Flour Exchange we made smoke tests.

Mr. Williamson: That is, we made them, the defendant made them?

The Witness: The defendant made smoke tests in the center line of the trays. There they endeavored to release the smoke at the center line of the tray 18 inches from the corridor,—the smoke could be plainly seen going clear to the back of the trays, where the reading "I" for "in" is shown, it means that for a space of 15 or 18 inches it was going straight in or straight in with just slight turbulence,— all air moving at this speed is turbulent, and especially if it comes in contact with any object. When we colored Exhibit 23 and 24,—

Mr. Williamson: Plaintiff's Exhibit.

A. It not only represented the conditions at the center of the tray, but, also represented particularly the conditions at the back of the trays. In other words, we had a space there 18 inches thick. Now, at the Flour Exchange they did not take smoke tests near the front of the trays, that is, within the trays. They were all taken in the corridor, that is, say, an inch in front of the trays. In making this
619 plane which I have made three inches from the front of the trays, I did not find near the disturbance that they found with smoke here where they work in the corridor, —if you will note back into the trays just a little bit you will find a definite movement just the same as we found near the center of the trays; in other words, if we had a plane here in which the air is moving into the fans and 18 inches in front of that we have another plane where we know the air is moving into the fan,—maybe it is not directly into it, but it is all over that area, and then another plane near the front of the trays, where it is still moving in, and those planes correspond, it is certainly reasonable to believe that that entire body of air is moving in towards the fan. That is what the smoke test shows in the test that I made. They did not make them down here at the Flour Exchange, but, when I made them, I found that was the case, and I find that the colorings on these sheets correspond remarkably close to what I made,—there is just one thing I want to call your attention to,—on the bottom of these sheets, which are exhibits 23 and 22, there is no attempt made to show the direction of air flow in the hatching trays; there were no tests made in the hatching trays, and, consequently, I did not color the hatching trays. If they were colored, the resemblance between these sheets and the ones that we introduced, they would be closer than they are now.

Q. Now, you heard the exposition of the prior art by Professor Rowley. Briefly stating, and taking the
620 prior art in a sort of a birds eye view, if you can, will you state any advantages that come from the Smith invention, that are not present in the prior art?

Mr. Williamson: I object to the use of the word "invention". If he says "disclosure in the Smith patent," I do not object to it.

Mr. Ely: I will modify it that way.

Mr. Williamson: Disclosure of the Smith patent.

Mr. Ely: Yes.

The Witness: In the Smith method eggs were successfully tiered one upon the other. Take the Smith machine as

an illustration, there we have fourteen trays high. The eggs are packed closely together. In the old style incubator, if you had only one tray high, you would have to have from 25 to 30 times as much floor space for your incubators. It would require much greater housing room. It requires a more carefully constructed room. There is a labor saving in the Smith method over the old prior art method of less than half as much labor. The expense of heating and operating the machine such as the Smith, is, at least, one-fifth of the methods in the prior art. In the Smith method you have one control and one thermostat or one thermometer to read, whereas in the prior art you would have a thermostat and a thermometer for every two to three hundred eggs. The volume of heat that is generated by the eggs and the advantage that is taken of that makes it possible to produce better chicks, because your heat can
621 be held more regular and more uniform. From an economical standpoint, then, there is a very decided saving in the Smith method.

Q. What about the temperature during the period of incubation?

Mr. Williamson: I object to anything further on that. It is not rebuttal. He went into all of this in his direct examination, and I cannot see how it rebuts anything. He is asking him to repeat what he said on direct examination.

The Court: I suppose that is true, excepting this, that you introduced certain exhibits here in the prior art, and he is trying to show here the difference between the prior art that you introduced and his method.

Mr. Williamson: But, he does not call attention to any of the patents or publications, and he assumed that in the prior art they had incubators with single trays, which point I exploded when I cross-examined him when he was on the stand first.

The Court: He is assuming a condition that I will have to pass on in the end whether the prior art shows incubators with tiers of trays like this, or that. That is a matter on which I should receive testimony, and it is a matter which I will not decide now.

Mr. Williamson: But, if he assumes as a part of his answer that in the prior art it only shows an incubator with single trays, he is going right in the face of facts as shown by these prior patents and publications.

622 The Court: Well, that is a matter I will have to pass on later.

Mr. Williamson: It is so obvious.

Q. What about the patents of the prior art that had more than one tray? Will you point out wherein the Smith differentiated from those?

A. I would like to discuss this first.

The Court: Well, go ahead in your own way.

The Witness: By patents we show staged incubation. Each of those that show staged incubation were not workable by experience, and according to the experience I have had. For example, take the Zimmer patent, it is impossible to keep the eggs in the advanced stages of incubation from overheating. A box which I used and placed a dozen eggs in showed that when air could not get to those eggs, we had a considerable amount of heat generated and within thirty minutes time the heat would rise to a point where it would be very injurious to the eggs. In the Stulik patent, the hotter eggs were at the top,—the convection currents would rise from the heating apparatus that would have to be at least 100 or at least 99, and generally 100, to keep the eggs in the earlier stages warm, and that air would continue to rise, and could not possibly cool off the eggs in the more advanced stages which were up at the top where convection currents would carry the heat. Furthermore, I have seen people try to operate machines on that principle, and they have been rank failures in every case. Now, with re-

623 gard to Ure's Dictionary publication, the difference in the temperature of the air between the ceiling and the floor would make that inoperative. If we have any ordinary room that is six or eight feet high, there is, at least, a half a degree per foot difference in temperature between the floor and the ceiling. The eggs in this were arranged at different levels, and there is nothing said about moving the eggs, and, furthermore, they are subjected to the same heating coils, that is, there is the heating coils passing over the top of them, and then you have the convection currents in the room, and if that room is six feet high, and it would lead you to believe that it was, you would expect at least three degrees difference in the temperature betwen the top and the bottom. Now, if you were going to hatch eggs so that the chickens are any good, you have got to keep your temperature much closer than that. I do not doubt but what the operators would get a few chicks, but it certainly would not be commercially operative in that day, and it is

not today. I have seen people try it, and it doesn't work out. Now, wasn't there one more?

Q. The Winkler.

A. The Winkler Patent describes staged incubation. There again there was no forced draft or means for keeping a uniform temperature through the machine, and from my own experience I would say it is impossible to keep that uniform temperature enough to hatch eggs. If that is treated as a whole, and if the whole room is open, you have a much higher temperature at the top due to convection cur-
624 rents, and if it is treated as three separate compartments, there is no arrangement made there for taking care of heat in the latter stages unless it would be they were entirely separate compartments; that is, they have the same heating system, and the water flows from one to the other.

Q. What about any patent that shows more than one layer or tray of eggs,—

Mr. Williamson: I think the patent should be identified.

Mr. Ely: I think he can discuss that whole subject in a general way.

The Court: You may answer it.

The Witness: When you place more than one layer of eggs in a machine, it is not possible without forced draft to have a uniform temperature at both layers. I have seen several people try this, and while they get a few chicks now and then, it is not practical. I have made a diligent search of hatcheries over the entire United States; that is, I have been in every state two or three times, and most states oftener than that, and I have failed to find any machines that were being operated with commercial success or with anything like success, that had over one layer of eggs in the compartment, unless there was forced draft applied to those.

Q. There is something that I noticed written up in the record that apparently is a mistake. When Mr. Perkins was on the stand I asked him about royalties. Who
625 gets the royalties from the Buckeye Incubator Company?

Mr. Williamson: That is not rebuttal.

Mr. Ely: I want to clear up a mistake in the record.

The Court: Very well.

A. Dr. Smith personally.

Mr. Ely: That is all.

Cross-Examination.

By Mr. Williamson:

Q. Mr. Taggart, when did you make the tests which you have tabulated on your sheets that have been introduced here? I mean your test of the plaintiff's model of the Snow machine.

A. The plaintiff's model was built a year ago this winter, sometime during the winter, and some tests were made then, and then the more complete tests were made starting in in August or September of this year, and running up to about the time we shipped the incubator out there.

Q. When did you ship it here?

A. It arrived in town two weeks ago last Sunday or Saturday.

Q. When did you make the particular sheet of the tabulated data relating to that Snow machine, which you placed in evidence here?

A. They are not dated, but they are an accumulation of work at odd times ranging perhaps from September 1st up to November 1st.

Q. Of this year, you mean?

A. Yes.

626 Q. Do you mean the originals were made then?

A. Yes, sir.

Q. Had you used those same originals in any other suit?

A. No, sir.

Q. You have stated you were assistant general manager of the Smith Incubator Company, have you not?

A. Yes, sir.

Q. Did you hear Mr. Samuel B. Smith's testimony given in the Boling case about your relations and your duties in the Smith Incubator Company?

A. Given in the Boling case?

Q. Yes.

A. I don't think the Doctor testified in the Boling case.

Q. He did.

A. It might have been taken on depositions. I wasn't present then.

Q. Isn't it a fact that you have been engaged in all of these infringement suits on behalf of that company, or most of them? A. Not all of them.

Q. You have in most of them, have you not?

A. I will say so.

627 Q. And you would start a suit without consultation with Mr. Samuel B. Smith or stop it without consultation with Mr. Samuel B. Smith, would you not?

Mr. Ely: Objected to as incompetent, irrelevant and immaterial, Your Honor.

The Court: Sustained.

Mr. Williamson: Sustained? I wanted to show his close relationship.

Q. Why did you not make tests of your plaintiff's model of the Snow machine and invite the defendant and his counsel to see those tests?

Mr. Ely: Oh, I object to that.

A. Well, the tests covered a matter of sixty to ninety days at various times. It hasn't been customary in the past. I don't know as—it hasn't been our custom.

Q. After this machine got here why didn't you make tests of that machine and invite the defendant and his counsel to be present?

Mr. Ely: I object to that, your Honor.

Mr. Williamson: That is very important.

The Court: He can answer.

Mr. Williamson: I have got a right to have that answer.

Q. Why didn't you do it?

A. That has not been our custom. It is not the practice of the attorney in charge of the matters. We prepared
628 our data. We brought our data here. We brought the machine here. I have testified to making the tests and I have had the Court there to show him how the tests were made.

The Court: In other words, that was the way you wanted to do it?

The Witness: Yes, sir.

Q. In other words, they preferred to rely on ex-parte than any tests that they showed to us?

The Court: You can argue the credibility of the witness in your argument.

Mr. Williamson: That is right. That is what I wanted to bring out about that.

Q. You stated that you built the plaintiff's model of the Snow machine that is here in Minneapolis and in evidence on behalf of the plaintiff about a year ago, is that right?

A. We started in about that time. I am not sure just when it was built, during the winter a year ago.

Q. A year ago. But on your direct examination you testified that you had built that machine from measurement of Mr. Snow's machine at Sleepy Eye in the basement of the building which was only exhibited to you late last fall.

A. Was exhibited to us on the 29th day of September, 1931. This model was not started for perhaps sixty days after that.

Q. It wasn't a year ago then?

A. Well, it was almost.

Q. Now, on your direct examination, since you have
629 been last on the stand here you made some reference to the incubator, the Bonnemain incubator, described in Ure's Dictionary of Arts, Manufactures and Mines, a photostat of which is in evidence on behalf of the defendant, and you were asked some question about the trays being super imposed and if I recall your testimony correctly which has not yet been transcribed, you said here today that you saw that machine tested. You mean to say that you saw the actual Bonnemain incubator tested anywhere in the world?

A. No, I have seen machines tried out along that same principle.

Q. You mean with super imposed trays?

A. Yes, sir, but they did not work.

Q. But you don't pretend ever to have seen the so-called Bonnemain incubator described in that publication, do you?

A. I stated that I had seen incubators that were built, tried out along that same principle.

Q. But not of that exact construction, have you?

A. No, there isn't enough detail given in the description to tell you about it.

Q. Where did you see anything like it and when?

A. Well, at Metheun, Massachusetts, there was one tried out there very similar to it. At Canby, Oregon, there was one tried out very similar to that.

Q. Give the name of it and describe it.

A. I can't remember the man's name at Matheun,
630 Massachusetts, but at this place he had super imposed trays where the eggs were placed on shelves with heating pipes over the top of them. It was in one large room, that particular room was perhaps ten feet long and eight feet wide and trays only on one side. That was perhaps in 1924 or perhaps 1925. I can't give you the exact date.

Q. And it was steam heated coils instead of water heated coils, wasn't it?

A. No, those were hot water coils. You can't use steam when you have the pipes close to the eggs, because to have steam heat your heat must be 212 and in hot water pipes they use a much lower temperature.

Q. And the circulating pipes, were they disposed like in the Bonnemain patent so they run between the different trays? A. Yes, sir.

Q. Was there any thermostat to control the heat in that machine?

A. Yes, they had thermostats on the outlet and these also operated a damper on the stove.

Q. And did they have staged incubation?

A. Yes, they tried it both ways, both with staged incubation and otherwise.

Q. I think you said something about having seen some tests made with some machine something like that described in the German patent to Stulik, did you not?

A. We have built such a machine.

631 Q. When and where?

A. In the—at Cleveland back perhaps in 1924, and I have seen a very similar machine to that at Hayward, California. It was built in the rear end of a garage there. I can't remember the—

Q. When did you see that?

A. I can't remember the man's name, but it was near the Henning and Schroeder hatchery, and that might be in 1925 or 1926.

Q. And was in use hatching eggs?

A. They built it and tried to use it. It wasn't a success.

Q. They did hatch chicks with it, didn't they?

A. Oh, there was some eggs hatched, yes.

Q. In the one that you made at Cleveland, Ohio, was that made by the Smith Incubator Company? A. Yes.

Q. I suppose you made that to be able to criticise the patent, didn't you, if possible?

A. No, we were trying to find out how far you could compact eggs, carry them along without forced draft. We made numerous tests on that.

Q. Did you try any tests of that, reversing the way in which the trays were set so that those in the later stages would be in the hottest place?

A. At the bottom you mean or at the top?

Q. Either way.

632 A. We tried it both ways.

Q. And it was possible to set the trays in that machine in such a way that the eggs in the more advanced stage

of incubation, the heat from the eggs in the more advanced stage of incubation could be utilized on those in the later stages, could it not?

Mr. Ely: I object to that, Your Honor. You are drawing on your imagination.

Mr. Williamson: No, there is no imagination about it.

Mr. Ely: Talking about the Stulik prior art patent.

The Court: He may answer it.

Mr. Ely: I understand he is not talking about the Stulik prior patent. He is talking about something else.

A. In case of Stulik, if you are copying after Stulik, your hottest eggs are at the top, the ones that are giving off the most heat, and if you keep the temperature right for those at the bottom, and there is no forced circulation of air, by the time you have passed the 12th, the 14th day you will find your eggs in the top entirely too warm and it is only a matter of perhaps the 18th day before the eggs die and it is almost impossible to get any chicks that are worth anything. You may get a few hatched early, but that is all.

Q. You have not answered my question at all. You have gone off on a lecture or some other tactics. Read the question to the witness and give me an answer. You haven't answered the question as put to you at all.

(Question read by the reporter.)

633 A. In the first place we were talking about Stulik and the Stulik arrangement. It is not in that arrangement. You then asked if they were reversed. I hadn't gotten to that part of my answer.

Q. There is the question. Please answer it.

A. Now, if the conditions are reversed, it is better, but you still cannot operate successfully, you cannot arrange them in an ordinary room so that you can keep them at the right proportional temperatures so that they hatch.

Q. Well, you say it is better. Then you did hatch eggs with them?

A. Yes, we hatched some eggs with both of them, but it wasn't commercially successful. It was simply an experiment. You can hatch eggs in a little bit of nothing once in a while, but you can't hatch them successfully.

Q. Now, you talked considerable about the Zimmer patent.

The Court: Gentlemen, are you going to be able to finish this afternoon?

Mr. Williamson: I think I will be through cross-examining this witness in just a few minutes.

The Court: I am going to close at 5 o'clock.

Mr. Williamson: But, we can't quit tonight, because we will have to have a chance to put in some surrebuttal.

Mr. Ely: I object to surrebuttal. I don't see any—

The Court: Gentlemen, I will run until 5 o'clock, and
634 then I will adjourn, and you can go ahead after Thursday. We won't hold court tomorrow.

Mr. Williamson: No, certainly not, certainly not.

Q. Now, you gave considerable testimony about the Zimmer patent, 1075747, of October 14, 1913, being one of the patents in evidence on behalf of the defendant, and you put considerable emphasis on the fact that he used what you call feather blankets, I believe is the word you used.

A. Feather mats.

Q. Feather mats between the trays of eggs, on top of the eggs lying on the trays, did you not?

A. Yes, sir.

Q. And isn't it a fact that he makes clear there in the specifications of that patent that those feather mats were intended to take the place of the feathers of the hen, to be similar to the feathers of the hen when setting on the nest?

A. I think he spoke about that.

Q. And if properly disposed and the trays were properly supported, the incubator disclosed in this Zimmer patent would operate in such a way that the heat of the eggs in the more advanced stages of incubation would be utilized to help hatch those in the late stage of incubation, would it not?

Mr. Ely: I object to that as entirely immaterial—

Mr. Williamson: That is just exactly what he states, proposes to do it.

The Court: He may answer.

635 Q. You can answer.

A. Heat that is forming by eggs in the advanced stages of incubation would be carried by convection currents to those that were higher up, but with no more ventilation than is disclosed there, the chicks or the embryos would practically all be killed before they got to the hatching stage.

The Court: Wouldn't the heat also be carried by contact?

The Witness: Yes, sir.

Mr. Williamson: By radiation.

The Court: By radiation, yes.

Mr. Williamson: There is no question about it.

Mr. Williamson: That is all.

(Witness excused.)

Mr. Ely: Plaintiff rests.

---

636 Defendants' Surrebuttal Case.

NORA SNOW'S Testimony.

Nora Snow, being recalled and examined as a witness on behalf of defendants in rebuttal, testified as follows on pages 693 to 709 of the typewritten trial record and the same is here reproduced in full.

637 November 25, 1932,
At 10 o'clock a. m.

Hearing resumed pursuant to adjournment.

Court and counsel present.

Mr. Williamson: May it please Your Honor, we have one witness that we desire to examine in surrebutal, Mrs. Snow.

Surrebuttal.

Nora Snow, recalled, testified as follows:

Direct Examination.

By Mr. Williamson:

Q. Mrs. Snow, did you hear examined, on behalf of the plaintiff, the woman who now lives in Mankato, but who formerly lived at Sleepy Eye, by the name of Lena Leux?

A. Yes, sir.

Q. How long have you known her,—just a minute, I will withdraw that question. Just state, Mrs. Snow, briefly, what have been your relations to the business of your husband, Mr. E. H. Snow,—I mean, in the conduct of his business; answer it briefly.

A. Well, I have always had a housekeeper and therefore I was with him almost continuously.

Q. You say you have a housekeeper?

A. Yes, and so my time was spent mostly with him.

Q. And what were your own duties in the business?
638 A. I took charge of the books and advertising, and whatever went on in the office.
Q. And did you have charge of the hiring and firing of all the help? A. Yes, sir.
Q. Now, you said you heard this Miss Lena Leux examined; did she have charge of the books at all?
A. No, sir; that is, she had charge of booking the orders, chick orders.
Q. On page 618 of the transcript, or of the record, she says that she did the bookkeeping; is that true or false?
A. That is false.
Q. On page 619 of the record, she stated that there was nobody else in the office besides herself; is that true or false?
A. That is not true.
Q. What is that? A. That is not true.
Q. Was there an egg setting book kept in the conduct of the business,—an egg setting book? A. Yes, sir.
Q. Who kept that?
A. Well, there were different ones.
Q. Well, did this woman keep it, Lena Leux?
A. Not entirely, no, sir.
Q. On page 626 of the transcript, she says that pre-
639 cautions were taken to conceal the operations going on in the cellar of Mr. Snow's plant there in Sleepy Eye; is that true or false?
A. (Witness hesitating) Well, we did not allow everybody to go down there; it was Mr. Snow's experimental place; it was not kept under lock and key.
Q. It was not kept under lock and key? A. No, sir.
Q. Was it ever kept under lock and key? A. No, sir.
Q. On page 632 of the transcript, she said that she had something to do with the advertising while she was there employed; is that right? A. Yes, sir.
Q. She also said in answer to cross-question that she did not mix up the advertising; is that true or false?
A. It was false.
Q. What are the facts about that matter,—what are the true facts about that matter?
A. Did you want me to explain it?
Q. Yes, in brief; did she mix them up?
A. Well, we had discharged her, and at that time she had asked for a recommendation, which Mr. Snow gave to her, but we re-hired her, and put her back into the advertising. At this time I used to check over the advertising, and I found out that some of the ads had been going out without
640 price sheets, which made this advertising practically unvaluable. I began checking up, and as I came to the

table where Miss Leux was with three other girls, one of the girls, being very conscientious, broke down and said that she knew who the party was that made this mistake.

Mr. Ely: I object to that as hearsay.

Mr. Williamson: (interrupting) I object to counsel interrupting there.

The Court: Just a minute. Counsel is making an objection as to a statement made by the witness, and he may make his objection.

Mr. Ely: I will object to that testimony as hearsay, Your Honor.

The Court: The objection is sustained.

Mr. Williamson: As to what point in her answer?

The Court: She is now saying that some person in the employ of the concern made a certain statement to her, and that may be stricken out.

Mr. Williamson: All right. Just confine yourself to what you yourself know, and don't say anything about what anybody said.

Q. Go ahead, if you were not through.
A. Well, I realized, through this, that it was impossible to keep her in our organization; therefore, we discharged her for the second time, as we could not trust her.
Q. And so you discharged her?
641 A. We discharged her for the second time.
Q. And was any recommendation ever given to her after that second discharge?
A. Not the second time, no, sir.
Q. What is that? A. No, sir.
Q. Now, on page 633 of the transcript, this woman, Lena Leux, testified to the effect, and finally admitted that she had been put out, but she said the reason was that Mr. Snow wanted to put in some of his relatives. Is that true or false?
A. It is false.
Q. Did Mr. Snow have any relatives that he sought to put in there? A. No, sir.

Mr. Ely: I object to that question.

By Mr. Williamson:
Q. Did he put any relatives in there? A. No, sir.
Q. And, on the same page, 633, she said that she had no trouble; is that true or false? A. That is false.

Q. On page 634, she testified to the effect that you were not there very much of the time while she was employed there; is that true or false? A. That is false.

Q. Were you there most of the time?

A. We would be gone, perhaps, for a half a day, or a
642 day, at a time, when we would go to check up the other hatcheries, but at these times I would work late at night, in charge of the books.

Q. There is another place, on page 634, or 635, where she said that you were not in charge of the books and records; I think that was the substance of what she said; is that true or false? A. That is false.

Mr. Ely: Just a minute, on what page is that?

Mr. Williamson: On page 634 or 635,—well, I will withdraw that question; I suppose it is too broad.

By Mr. Williamson:

Q. You testified as to the only records that she had anything to do with, have you not,—you have already named the only records that this woman had anything to do with?

A. Yes, sir.

Q. And that was the order book, was it?

A. Yes, sir.

Q. And those were kept under your direction, weren't they? A. Yes, sir.

Q. On page 636, she said that millions of eggs were hatched there at that hatchery, while she was employed there, every year; is that true or false? A. Was it eggs?

Q. She said millions of eggs.

A. Was it eggs or chicks?

643 Q. It was chicks; I beg your pardon; I meant, chicks, of course. Will you substitute the word "chicks" in there? A. No, sir.

Q. Was that false? A. That was false.

Q. Did you keep any record of the chicks which you did hatch? A. No, sir.

Q. Is it a fact that Mr. Snow had other hatcheries in different parts of the state at that time? A. Yes, sir.

Q. And is it also a fact that the chicks hatched at these other hatcheries were brought to Sleepy Eye and shipped from there? A. Yes, sir.

Mr. Ely: I object to this examination. Mr. Snow is present here in the court room. I don't know why his wife should take the stand on that matter.

Mr. Williamson: I think that that is a perfectly proper question. This woman said there were millions of chicks there. Now, she could not tell whether they were chicks hatched from that hatchery, or from a hatchery at some other point.

Mr. Ely: I am objecting to her testimony because Mr. Snow is in the court room, and his wife is incompetent to testify, while he is in the court room.

The Court: I don't think it is incompetent because
644 he is in the court room.

Mr. Ely: I think Mr. Snow ought to be examined on this point.

The Court: Well, of course, that is relative; the objection is overruled.

Mr. Ely: Exception.

The Court: You can answer the question.

A. What was the question?

(Previous question read by the reporter.)

A. Yes.

By Mr. Williamson:

Q. And was that in small or large numbers?

A. Sometimes in large numbers, and sometimes in small numbers.

Q. So that from the number of chicks that were shipped from that place, or from that factory, you could not tell how many had been hatched there, could you,—an observer?

A. No, sir.

Q. Did this woman, Lena Leux,—I will withdraw that question. Just state again, briefly, what was the only duties, or what were the duties of this woman, Lena Leux, at that time.

A. Well, they were booking the orders, and whenever there was nobody else in the room, she had charge of the customers coming in.

Q. And on what floor of the building was that?

A. That was on the main floor.

645 Q. On the street floor? A. On the street floor.

Q. And is that where the office was? A. Yes, sir.

Q. And her position, and place of doing her work was in the office, was it? A. Yes, sir.

Q. Did she have any occasion, or did she have any duties which called her to visit the cellar, in the basement of the building? A. No, sir.

Q. None whatever? A. None whatever.
Q. Did this woman, Lena Leux, have anything whatever to do with the hatching of such eggs as were hatched at that hatchery at that time?
A. Nowhere, no, sir; she would only write out the egg checks.
Q. (continuing)—except, of course, as to keeping the orders? A. Yes.
Q. That is all that she did?
A. Yes, sir.
Q. Did you ever see her downstairs,—I mean, in the basement of that building? A. No, sir.

Mr. Ely: I object to that question.

646 Mr. Williamson: That is all.

Cross-Examination.

By Mr. Ely:
Q. After you left here Wednesday night, didn't you and Mr. Snow, and a Mr. Williamson of the Williamson firm, drive to Sleepy Eye?

Mr. Williamson: I did not go to Sleepy Eye.

A. No, sir.
Q. Well, the younger Mr. Williamson, one of Mr. Williamson's sons? A. No, sir.

By Mr. Ely:
Q. Did you and Mr. Snow go to Sleepy Eye?
A. Wednesday night?
Q. Yes. A. The night before Thanksgiving?
Q. Yes. A. Yes, sir.
Q. And didn't you have a meeting up in the hatchery Wednesday night? A. The family.
Q. No; pardon me; didn't you have a meeting Wednesday night?

Mr. Williamson: She said, the family.

By Mr. Ely:
Q. Did you have a meeting in the hatchery Wednesday night at Sleepy Eye? A. Not to my knowledge.
Q. Not to your knowledge?
647 A. No, sir.

The Court: A meeting of whom?

Mr. Ely: All right.

By Mr. Ely:
Q. Were you and Mr. Snow in the hatchery Wednesday night?
A. Well, we live above the hatchery; we are upstairs and downstairs.
Q. Weren't you in the office of the hatchery Wednesday night? A. I would think so.
Q. Who else was there?

Mr. Williamson: That is objected to as immaterial, if Your Honor please.

A. Well, our help, I imagine.

The Court: Well, I cannot tell whether it is or not.

A. Our help.

By Mr. Ely:
Q. Can you name them? A. Yes.
Q. Name them, please; who was there Wednesday night?
A. Well, Mr. Woods.
Q. Where is he from? A. He is from Mankato.
Q. Who else? A. A nephew of mine, who stays with us.
Q. And who else?

By Mr. Williamson:
Q. He lives with you?
A. He lives with us.

648 By Mr. Ely:
Q. And who else? A. Mr. Snow.
Q. Anyone else? A. Myself.
Q. Anyone else? A. Perhaps my daughter.
Q. Anyone else? A. Not that I can remember.
Q. On Thanksgiving Day, were you and Mr. Snow in the hatchery?
A. Yes, we were back and forth; we live right upstairs.
Q. Was anybody there besides yourself? A. Yes, sir.
Q. Who? A. Well, at what time?
Q. At any time during Thanksgiving Day.
A. My son-in-law was there in the afternoon.
Q. Was anyone there in the morning? A. No, sir.
Q. There was no other person there in the morning at all?
A. Not that I can recall.
Q. Now, I will ask you, Mrs. Snow, do you know of a paper published in Sleepy Eye by the name of the Sleepy Eye Progressive?

Mr. Williamson: I object to this as not proper cross-examination. I did not ask any questions about any paper from Sleepy Eye.

649 The Court: I don't know where it is leading to.

Mr. Williamson: That is objected to as immaterial and incompetent.

The Court: It must be preliminary; I don't know what it is leading to. The objection is overruled. You can find out.

Mr. Williamson: Exception.

By Mr. Ely:

Q. Do you recognize this paper as the Sleepy Eye Progressive of January 7, 1924, and do you recognize that write-up of the Snow incubator in that paper?

(Document submitted to the witness.)

Mr. Williamson: The same objection. We should find out what it is leading to.

The Court: Well, I have not admitted anything as yet; I have not admitted that paper; it has not been offered yet. I cannot find out, except in the course of the examination.

Mr. Williamson: Well, it is not proper cross-examination; I did not ask her anything about that paper.

The Court: Well, it may turn out to be; I cannot tell; I cannot tell without getting you lawyers up here and examining you first. The objection is overruled.

Mr. Williamson: Exception.

A. Well, I don't quite get this. Wasn't it brought out before the Court here, that we bought our Smith machine in 1924?

By Mr. Ely:

Q. I want an answer to my question.

650 Mr. Williamson: I want to see whether the answer is down.

By Mr. Ely:

Q. I wish you would answer the question.

A. What was the question?

(Previous question read by the reporter.)

A. Well, it is a likeness.

By Mr. Williamson:

Q. It is a likeness? A. Yes.

Mr. Williamson: Now, if Your Honor please, it is pretty clear what counsel is driving at.

The Court: Well, I don't know what he is driving at.

Mr. Williamson: Well, I think I do. He is trying to get testimony from this woman, about some other incubator that was there used at some time in that hatchery, and that that is referred to here in this paper; that is what he is asking the witness; I have not asked her any questions about that. It is entirely improper cross-examination.

The Court: Well, this is not before the jury.

Mr. Williamson: But why should not he have put that proof in in his case on the direct?

The Court: Will you just wait a moment? He has not offered any such testimony as that, and when he does so, it will be time enough to object.

Mr. Williamson: Well, he is asking her a question about that.

The Court: No; he is asking her if she recognized
651 that paper.

By Mr. Ely:

Q. Well, do you recognize that article; have you seen it?
A. I would not say positively.

The Court: What is the date of that paper?

Mr. Ely: January 7, 1924, Your Honor.

The Court: Well, go ahead.

Mr. Ely: I will offer the paper in evidence.

Mr. Williamson: Now, we object to that, Your Honor, as incompetent and immaterial to any of the issues in this case, and not proper cross-examination.

The Court: I don't see where it is competent.

Mr. Ely: Well, it is competent, Your Honor, because Mrs. Snow has been brought on the stand to dispute the testimony of Miss Leux. Now, here are some papers which we have,—we have this paper, and we have some other papers,—which show the affairs of Mr. Snow building his own incubator, which is what Miss Leux testified to.

Mr. Williamson: No, no.

The Court: (interrupting) Just a minute, now, gentlemen; I will hear one at a time. If you will sit down, gentlemen,—I don't like this manner of crowding around the Court. When one lawyer gets through, you sit down, and I will listen to the other.

Mr. Ely: Mrs. Snow has been on the stand and disputed the testimony of Miss Leux, as to the operation of the
652 Snow machine,—of certain incubators in the cellar, and that article which you have before you there, is a descripton of the incubator built by Mr. Snow, and they were said to have been operated in the cellar of that establishment, and I therefore offer that paper in evidence.

Mr. Williamson: If Your Honor please,—

The Court: (interrupting) I don't care to hear you. I think it is incompetent. If some reporter was here, and was sworn, and stated his reason for publishing that, the origin of it, and who was the author of it, and where he got his information, that would be different, but there is nothing in here for the Court to consider. The objection is sustained.

Mr. Ely: Exception.

By Mr. Ely:

Q. Do you know, Mrs. Snow, the origin of that article?

Mr. Williamson: The same objection.

A. I do not recollect.

By Mr. Ely:

Q. You don't know, then? A. No, sir.

Q. Do you know whether Mr. Snow gave that to the reporter of that paper? A. I would not remember.

Q. Is that article in that paper a statement of the true state of affairs at the Snow hatchery in 1924?

Mr. Williamson: That is objected to as hearsay.

The Court: Just a moment. We have plenty of time to
653 hear this matter. I don't see, even though the article was genuine, and that that is the date that it was published and authorized, and agreed to by Mr. Snow, that it is applicable here at this time; I don't see it. As I understand it,—I have not read it,—what you are showing is that they had some other incubator.

Mr. Ely: That they had an incubator just as this woman testified,—that they had an incubator in the cellar.

The Court: She has not disputed that.

Mr. Ely: And that they operated an incubator in the cellar there.

The Court: She has not disputed that.

Mr. Ely: All right.

The Court: The objection is sustained.

Mr. Ely: Exception.

CLERK'S COPY.

Vol. II

TRANSCRIPT OF RECORD

Supreme Court of the United States

OCTOBER TERM, 1934

No. 102

SAMUEL B. SMITH, PETITIONER,

vs.

E. H. SNOW AND E. H. SNOW, DOING BUSINESS AS SNOW'S HATCHERIES AND SNOW'S INCUBATOR COMPANY.

ON WRIT OF CERTIORARI TO THE UNITED STATES CIRCUIT COURT OF APPEALS FOR THE EIGHTH CIRCUIT.

PETITION FOR CERTIORARI FILED JUNE 11, 1934.

CERTIORARI GRANTED OCTOBER 8, 1934.

United States Circuit Court of Appeals
EIGHTH CIRCUIT.

No. 9757

IN EQUITY.

E. H. SNOW, AND E. H. SNOW DOING BUSINESS AS SNOW'S HATCHERIES AND SNOW'S INCUBATOR COMPANY, APPELLANTS,

vs.

SAMUEL B. SMITH, APPELLEE.

APPEAL FROM THE DISTRICT COURT OF THE UNITED STATES FOR THE DISTRICT OF MINNESOTA.

FILED MAY 29, 1933.

INDEX.

	Original	Print
Bill of Complaint	1	1
Bill of Particulars	6	4
Answer as Amended	7	5
Order that Defendants prepare further and better statement specifying patents, etc., upon which they will rely	19	16
Acknowledgment of Service of Response of Defendants	20	17
Response of Defendants to Order directing them to prepare further and better statement specifying patents, etc., upon which they will rely	21	18

	Original	Print
Stipulation as to Introduction of uncertified copies of letters patents, etc	24	20
Opinion of District Court	973	20
Decree, February 11, 1933	979	24
Petition for Appeal and allowance thereof	982	26
Bond on Appeal	984	27
Assignment of Errors	986	29
Citation and Admission of Service	999	42
Stipulation for extension of time to file Transcript	1001	43
Order extending time to file Transcript	1001	43
Stipulation for further extension of time to file Transcript	1002	44
Order further extending time to file Transcript	1002	44
Stipulated Praecipe for Transcript	1003	44
Approval of Praecipe by District Judge	1011	54
Stipulation that certain exhibits be sent to Circuit Court of Appeals as original exhibits and Order granting same	1012	54
Statement of Evidence	26	55
Caption	26	55
Testimony for Plaintiff	27	56
Joseph I. Taggart	27	56
Harry B. Perkins	155	131
Earl H. Snow	158	133
Joseph I. Taggart, recalled	158	133
Testimony for Defendants	159	134
Samuel B. Smith	159	134
E. H. Snow	167	140
Nora Snow	245	181
Frank B. Rowley	246	182
Testimony for Plaintiff in Rebuttal	571	375
Lena Laux	571	375
Clarence J. Holmes	599	391
Malcolm G. Reynolds	601	392
Harold E. Davis	603	394
Joseph I. Taggart	606	396
Testimony for Defendants in surrebuttal	636	414
Nora Snow	636	414

Index, Volume 2

Plaintiff's Exhibits	654	425
1, Letters Patent No. 1,262,860 to S. B. Smith, April 16, 1918	654	425
2, Chart showing days of incubation	661	433
3, Record of heat development in eggs of common fowl	662	435
4, Photograph of eggs attached to Exhibit 3	663	437
5, Pencil sketches showing circuits of air	664	439
6, Photograph showing front and side of Smith Commercial Machine	665	441
6-A, Photograph of front view of Smith Commercial Machine	666	443
6-B, Photograph of interior front view of Smith Commercial Machine	667	445
6-C, Photograph of interior side view of Smith Commercial Machine	668	447
7, 7-A and 7-B, Scale drawings showing interior sectional views of Smith Commercial Machine	669	449
8, 8-A and 8-B, Snow Advertisements (Original exhibits)	672	455

	Original	Print
9, Contract for purchase of Snow Machine by Ralph Hopkins from Snow Incubator Company, July 3, 1931	673	457
10, Photograph of front view of Snow Machine	674	459
10-A, Photograph showing front and side view of Snow Machine.	675	461
10-B, Photograph of interior front view of Snow Machine	676	463
10-C, Photograph of interior side view of Snow Machine	677	465
10-D, Photograph of interior of Snow Machine with side trays removed	678	467
10-E, Photograph of detailed view hatching rack of Snow Machine	679	469
11, Catalogue of Robbins Incubator Company (Original exhibit)	680	471
12 to 12-KK, Photographs of Taggart's test data sheets relating to Snow Machine	681	473
13 to 13-KK, Colored photographs of test data sheets relating to Snow Machine	692	495
15, Drawing of Taggart's Scale of Snow's Sleepy Eye Machine.	701	513
18, Contract for purchase of incubator by E. H. Snow from Smith Incubator Company, June 13, 1925	702	515
19, Tabulation of incubators sold by Smith and Buckeye Companies	703	517
20, Letter, E. H. Snow to Dr. S. M. Smith, October 30, 1924	704	519
21, Letter, Smith Incubator Company to E. H. Snow, November 4, 1924	705	521
22 and 23, Colored Diagrams of Rowley's Test Data sheets	706	523
14, Model (Original exhibit)	708	527
Defendants' Exhibits	709	529
A, Page from Cleveland "Sunday Plain Dealer" of February 23, 1913	709	529
B, Page from "Cleveland Leader" of February 22, 1914	710	531
C, Sketch—Snow's egg setting	711	533
D-1 to D-5, Photographs of Different view of Snow Machine	712	535
D-1, Interior from doorway—One water pan removed	712	535
D-2, Interior from doorway—Both water pans in place	713	537
D-3, Interior—Some trays removed—showing one agitator	714	539
D-4, Exterior view of front	715	541
D-5, Exterior view of front and side	716	543
E-1 to E-3, Photographs of different views of Sleepy Eye Machine	717	545
E-1, Photograph of interior view from door	717	545
E-2, Photograph of interior view from door with Mr. Snow in corridor	718	547
E-3, Exterior view	719	549
G-1 to G-3, Photographs of different views of Snow's Smith Machine	720	551
G-1, Name plate on door	720	551
G-2, Interior view from doorway	721	553
G-3, Interior view from doorway with one fan panel dropped.	722	555
J-1 and J-2, Diagrams of Rowley's Test Smith Machine	723	557
L-1 to L-5, Drawings of Snow Incubator	725	561
L-1, Front elevation	725	561
L-2, Side elevation	726	563
L-3, Longitudinal Section	727	565
L-4, Cross-Section	728	567
L-5, Details of Incubator	729	569

	Original	Print
M-1 to M-7, Diagrams of Rowley's Test Data of Snow Machine.	730	571
N-1 to N-3, Pencil sketch of Rowley's Test Data of Snow's Sleepy-Eye Machine	737	585
O, File Wrapper and Contents of Smith Letters Patent in suit, Memorandum as to	740	591
P, Letters Patents	741	593
United States Letters Patents	741	593
No. 120,253 to H. Endemann, October 24, 1871	741	593
No. 152,644 to E. A. Jones and C. W. Jones, June 30, 1874.	745	597
No. 272,744 to A. H. Morgan, February 20, 1883	751	603
No. 286,756 to C. F. Winkler, October 16, 1883	758	609
No. 297,676 to G. Conant, April 29, 1884	768	619
No. 330,457 to C. Bassini & A. Heyden, November 17, 1885.	771	623
No. 344,474 to J. W. Campbell, June 29, 1886	778	631
No. 559,676 to T. R. C. Christianson, May 5, 1896	784	637
No. 591,870 to F. H. Morgan, October 19, 1897	794	647
No. 691,837 to V. S. Bell, January 28, 1902	802	655
No. 709,650 to O. P. Scott, September 23, 1902	808	661
No. 745,458 to F. C. Perkins, December 1, 1903	814	667
No. 828,181 to G. H. Boyd, August 7, 1906	824	677
No. 891,019 to L. Verna, June 16, 1908	831	683
No. 916,454 to V. C. Koons, March 30, 1909	836	689
No. 949,653 to J. H. Klinke, February 15, 1910	852	705
No. 1,100,146 to J. O. Olson, June 16, 1914	858	711
No. 1,137,752 to G. E. Goldstein, May 4, 1915	862	715
No. 1,160,793 to S. S. Van Keuren, November 16, 1915	866	719
German Letters Patent No. 155917 to E. Stulik, November 7, 1901	875	729
Translation of German Letters Patent	878	737
United States Letters Patents	883	745
No. 3,019 to N. E. Guerin, March 30, 1843	883	745
No. 360,223 to E. H. Johnson, March 29, 1887	894	757
No. 426,321 to J. K. Proctor and J. H. Knowles, April 22, 1890	901	765
No. 843,909 to F. M. Peters and H. H. Hungerford, February 12, 1907	908	773
No. 992,622 to J. Wiebe, May 16, 1911	914	779
No. 1,010,809 to J. Schmidt and H. Schutterle, December 5, 1911	918	783
No. 1,075,747 to C. W. Zimmer, October 14, 1913	930	795
Q, Cover and Pages 652 and 653 of Ure's Dictionary of Arts, Manufactures and Mines	940	805
R, Pages 2704 and 2705 of Knight's American Mechanical Dictionary	943	811
S, Sketch of Compartment of Smith's 1913 and 1914 Machine.	945	815
T, Letters Patent No. 535,175 to C. W. Schwartz, Jr., March 5, 1895	946	817
U, Interior view of Incubator of E. H. Snow	962	833
V, Letters Patent No. 1,562,787 to I. M. Petersime, November 24, 1925	963	835
Plaintiff's Exhibits 16 and 17, Models (Original exhibits)	971	843
Defendants' Exhibits F and H, Models (Original exhibits)	971	843
Stipulation of Counsel approving Statement of Evidence	972	843
Approval of Statement of Evidence by District Judge	972	843

	Original	Print
Clerk's Certificate to Transcript	1013	844
Stipulation to forward Defendant's Exhibit O, File Wrapper and Contents of Letters Patent No. 1,262,860 to S. B. Smith, April 16, 1918 to United States Circuit Court of Appeals, and that copies thereof be included in printed record	1	844
Order of United States District Judge approving stipulation	2	846
File Wrapper and Contents of Letters Patent No. 1,262,860 to S. B. Smith, April 16, 1918	3	847
Record of filings	3	847
Letter to Commissioner of Patents, October 24, 1916	3a	849
Petition	4	851
Specification	4	851
Oath	14	871
Communication from Commissioner of Patents, November 1, 1916	15	873
Letter to Commissioner of Patents, March 3, 1917	18	879
Communication from Commissioner of Patents, March 24, 1917	21	885
Letter to Commissioner of Patents, April 5, 1917	25	893
Communication from Commissioner of Patents, April 12, 1917	28	899
Letter to Commissioner of Patents, April 20, 1917	30	903
Communication from Commissioner of Patents, May 3, 1917	34	911
Letter to Commissioner of Patents, June 13, 1917	35	913
Letter to Commissioner of Patents, June 26, 1917	36	915
Communication from Commissioner of Patents, June 30, 1917	39	921
Letter to Commissioner of Patents, February 9, 1918	41	925
Affidavit of Samuel B. Smith	45	933
Affidavit of George Cugley	46	935
Drawings 1 to 5	49	941
Drawings A to E	54	951
Letter to Commissioner of Patents	59	961
Communication from Commissioner of Patents advising of allowance of patent, March 12, 1918	60	963
Letter to Commissioner of Patents	61	965
Contents	62	967
Letters Patent No. 1,262,860 to S. B. Smith, April 16, 1918	64	971
Certificate of Clerk to Stipulation	70	981
Proceedings in U. S. Circuit Court of Appeals	982	982
Appearance of Mr. Ralph E. Williamson as Counsel for Appellants	982	982
Appearance of Mr. James F. Williamson as Counsel for Appellants	982	982
Appearance of Mr. A. L. Ely as Counsel for Appellee	983	982
Appearance of Mr. A. C. Paul as Counsel for Appellee	983	983
Appearance of Mr. Maurice M. Moore as Counsel for Appellee	983	983
Order of Argument	984	983
Order of Submission	984	983
Opinion, U. S. Circuit Court of Appeals	985	984
Decree, U. S. Circuit Court of Appeals	994	991
Petition of Appellee for Rehearing	995	993
Letters Patent No. 1,728,980, to John L. Robbins, Sept. 24, 1929	1002	1002
Order denying Petition for Rehearing	1005	1005
Petition for Stay of Mandate	1005	1005
Order Staying Issuance of Mandate	1006	1005
Clerk's Certificate to Transcript	1007	1006
Order allowing certiorari		1007

654

(Plaintiff's Exhibit 1.)
(Letters Patent No. 1,262,860 to S. B. Smith,
April 16, 1918.)

426

S. B. SMITH.

INCUBATOR.

APPLICATION FILED OCT. 26, 1916.

1,262,860.

Patented Apr. 16, 1918.

2 SHEETS—SHEET 2.

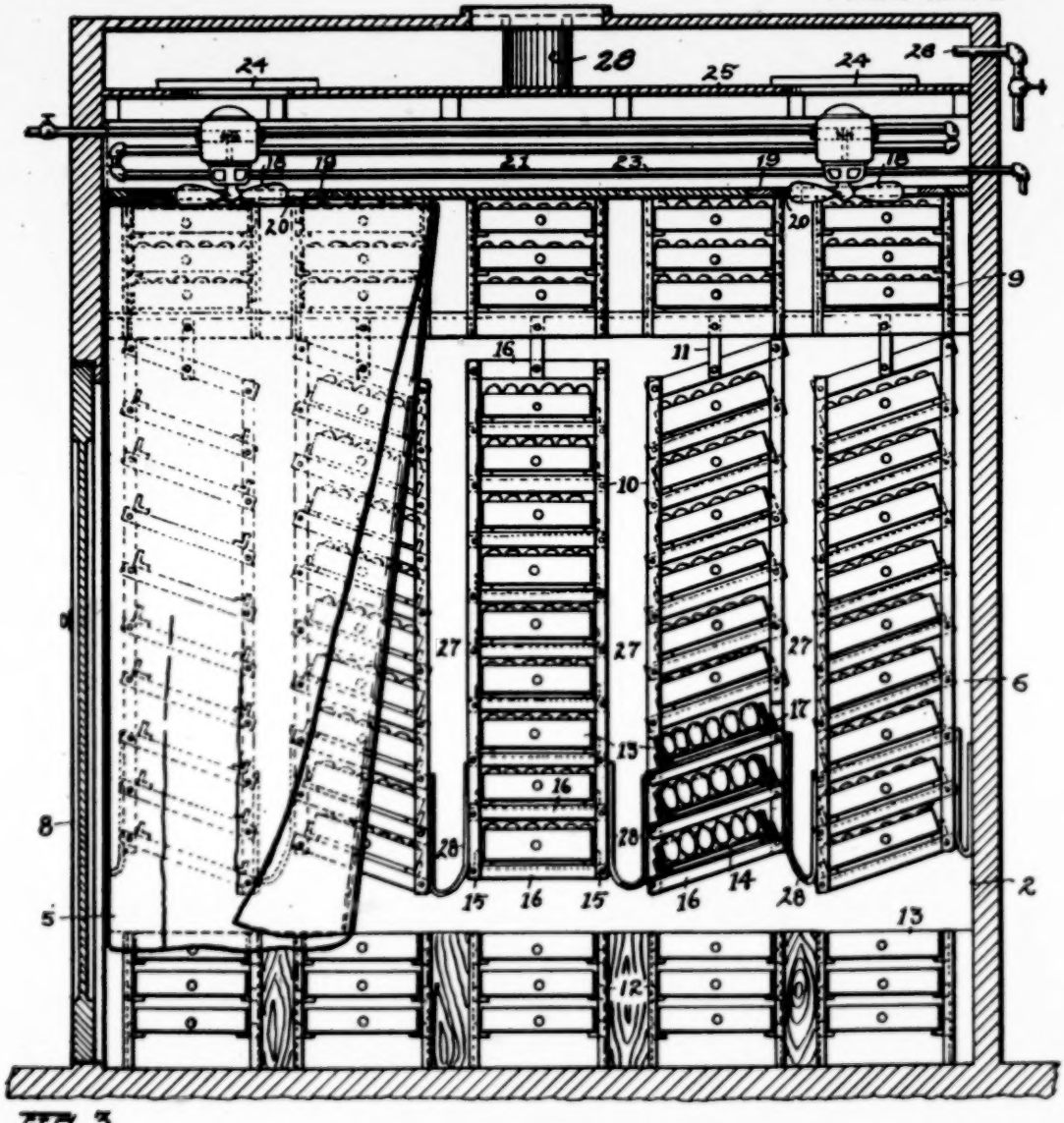

FIG. 3

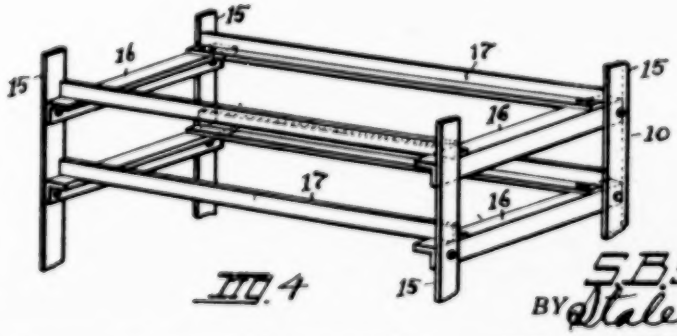

FIG. 4

INVENTOR.

S. B. SMITH.

BY Staley & Bowman

428

S. B. SMITH.

INCUBATOR.

APPLICATION FILED OCT. 26, 1916.

1,262,860.

Patented Apr. 16, 1918.

2 SHEETS—SHEET 1.

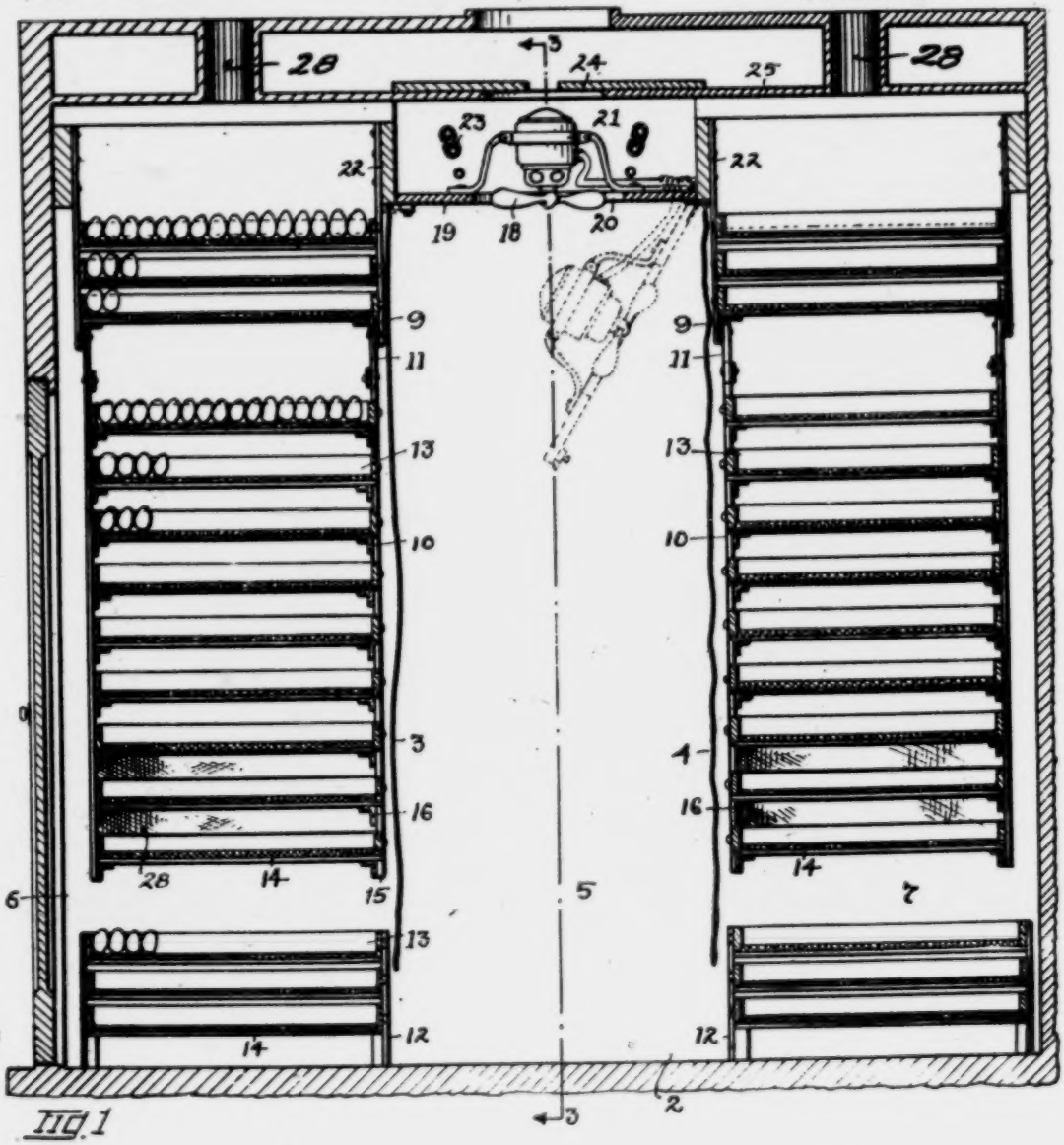

FIG. 1

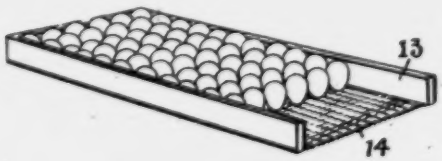

FIG. 2

INVENTOR.
S. B. SMITH.
BY Staley & Bowman
ATTORNEYS

UNITED STATES PATENT

SAMUEL B. SMITH, OF CLEVELAND, OHIO, ASSIGNOR TO THE B
OF SPRINGFIELD, OHIO, A CORPORATION OF

INCUBATOR.

1,262,860. Specification of Letters Patent. Pa

Application filed October 26, 1916. Serial No. 127,

To all whom it may concern:

Be it known that I, SAMUEL B. SMITH, a citizen of the United States, residing at Cleveland, in the county of Cuyahoga and State of Ohio, have invented certain new and useful Improvements in Incubators, of which the following is a specification.

The improved apparatus and method, is particularly designed for extensive operations wherein a chamber of large dimensions is adapted to contain thousands of eggs in separate trays arranged in tiers and the method of heating is such that the heated air is adapted to the eggs in various stages of incubation. There is a forced circulation of hot air through the chamber which is adapted preferably to maintain all eggs at temperatures between 100° and 105° Fahrenheit approximately and this improved system contemplates that fresh eggs will be placed in a horizontal plane, preferably by means of trays supported in horizontal planes, and after the eggs have been subject to the circulation of hot air for a predetermined time (the air circulating largely around the eggs) they will be placed in a tilted or inclined position in a different location but still subject to the same column of air and at this period of incubation they will be tilted in different planes at regular intervals during the time they remain in this latter position, and after they have remained for a predetermined time they will be again moved to a different position with reference to the forced circulation of hot air and so placed therein that the air will tend to keep the eggs below 105° temperature, and in this last named position the air will be forced to pass between the different eggs and will in effect act as a cooling medium for the eggs. The temperature of circulating air should be such as will prevent the eggs in the early stage of incubation from falling below 100° and the speed or velocity of the circulating air should be such as to carry the heat away from the eggs in the later stage of incubation and thereby hold the temperature of those eggs at 105° or slightly below that. It is manifest that the temperature will remain practically the same throughout the column of eggs, but the air is impelled with sufficient velocity to carry the heat away from the eggs which happen to be in the advanced stage of incubation.

In the accompan
Figure 1 is a cro
incubator.
Fig. 2 is a pers
egg trays with o
clearly disclose th
Fig. 3 is a verti
on line 3—3, Fig.
Fig. 4 is a per
of one of the tilti
The invention c
2 corresponding i
nary room, say
high, eight to ten
sired length, and
longitudinally by
tains 3 and 4 to p
ment or corridor
and 7. Entrance
by a door 8, and
the curtains co
racks 9 which ar
of the attendant
supply and from
trays may be shif
tier of tilting rac
suspended theref
of stationary rac
neath the tilting
racks are of ope
same size to perm
low trays 13 fo
These trays are
bottoms 14 upon
the eggs rest in
and each tray o
rack 9 for the fi
transferred to a
the tilting rack
days the trays in
from higher to
tilted at frequen
sitely-inclined p
eggs is preferab
substantially on
in the lower-mo
10 are about re
transferred to t
the chicks may
quires.

Each tilting
dicular corner b
series of cross b
angle irons 17 e

S. B. SMITH.

INCUBATOR.

APPLICATION FILED OCT. 26, 1916.

Patented Apr. 16, 1918.

2 SHEETS—SHEET 1.

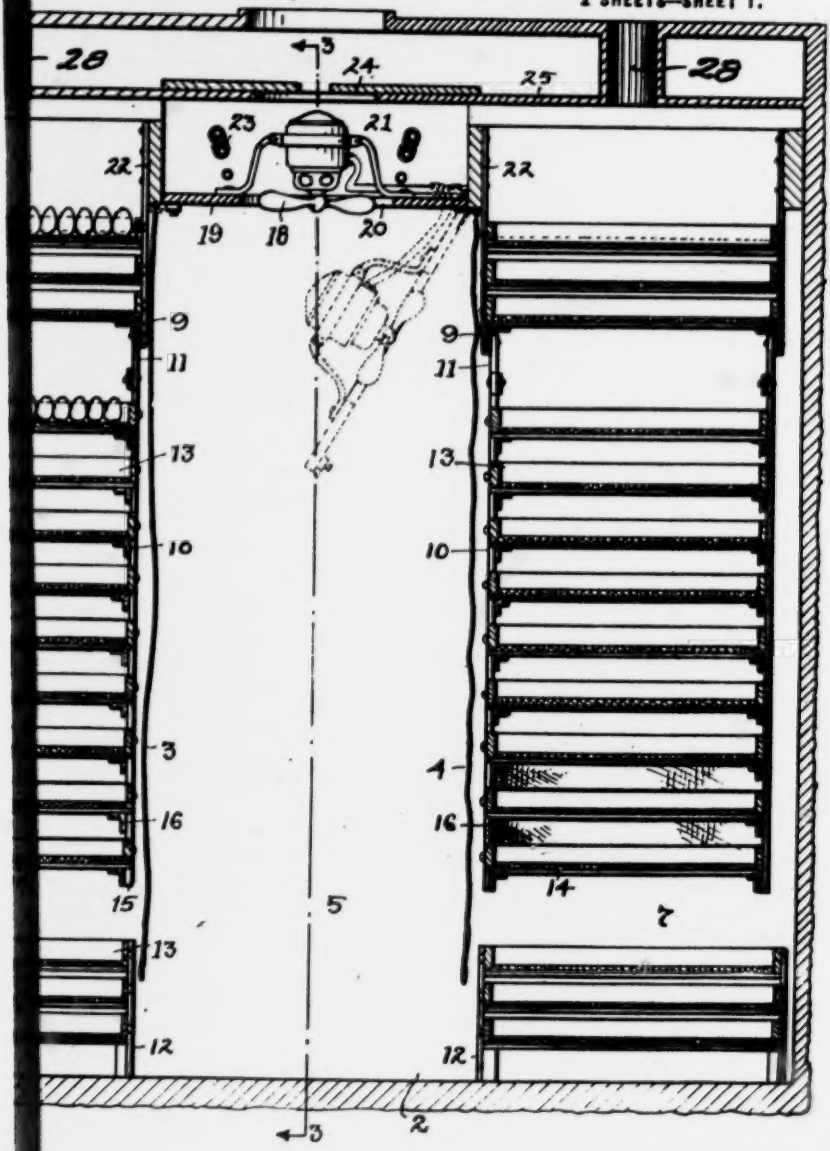

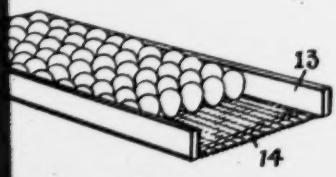

FIG. 2

INVENTOR.
S. B. SMITH.
BY Staley & Bowman
ATTORNEYS

SAMUEL B. SMITH, OF CLEVELAND, OHIO, ASSIGNOR TO THE BUCKEYE INCUBATOR CO., OF SPRINGFIELD, OHIO, A CORPORATION OF OHIO.

INCUBATOR.

1,262,860. Specification of Letters Patent. Patented Apr. 16, 1918.

Application filed October 26, 1916. Serial No. 127,915.

To all whom it may concern:

Be it known that I, SAMUEL B. SMITH, a citizen of the United States, residing at Cleveland, in the county of Cuyahoga and State of Ohio, have invented certain new and useful Improvements in Incubators, of which the following is a specification.

The improved apparatus and method, is particularly designed for extensive operations wherein a chamber of large dimensions is adapted to contain thousands of eggs in separate trays arranged in tiers and the method of heating is such that the heated air is adapted to the eggs in various stages of incubation. There is a forced circulation of hot air through the chamber which is adapted preferably to maintain all eggs at temperatures between 100° and 105° Fahrenheit approximately and this improved system contemplates that fresh eggs will be placed in a horizontal plane, preferably by means of trays supported in horizontal planes, and after the eggs have been subject to the circulation of hot air for a predetermined time (the air circulating largely around the eggs) they will be placed in a tilted or inclined position in a different location but still subject to the same column of air and at this period of incubation they will be tilted in different planes at regular intervals during the time they remain in this latter position, and after they have remained for a predetermined time they will be again moved to a different position with reference to the forced circulation of hot air and so placed therein that the air will tend to keep the eggs below 105° temperature, and in this last named position the air will be forced to pass between the different eggs and will in effect act as a cooling medium for the eggs. The temperature of circulating air should be such as will prevent the eggs in the early stage of incubation from falling below 100° and the speed or velocity of the circulating air should be such as to carry the heat away from the eggs in the later stage of incubation and thereby hold the temperature of those eggs at 105° or slightly below that. It is manifest that the temperature will remain practically the same throughout the column of eggs, but the air is impelled with sufficient velocity to carry the heat away from the eggs which happen to be in the advanced stage of incubation.

In the accompanying drawings:

Figure 1 is a cross section of my improved incubator.

Fig. 2 is a perspective view of one of the egg trays with one end removed to more clearly disclose the open mesh bottom.

Fig. 3 is a vertical section of the incubator on line 3—3, Fig. 1.

Fig. 4 is a perspective view of a portion of one of the tilting racks for the trays.

The invention comprises a walled chamber 2 corresponding in size to that of an ordinary room, say approximately nine feet high, eight to ten feet wide, and of any desired length, and this chamber is subdivided longitudinally by two parallel rows of curtains 3 and 4 to provide a central compartment or corridor 5 and side compartments 6 and 7. Entrance to the corridor is gained by a door 8, and the compartments behind the curtains contain elevated stationary racks 9 which are within convenient reach of the attendant for introducing the fresh supply and from which elevated position the trays may be shifted at the proper time to a tier of tilting racks 10 on a lower plane and suspended therefrom by links 11. A series of stationary racks 12 are also arranged beneath the tilting racks 10, and all of said racks are of open construction and of the same size to permit interchange of the shallow trays 13 for the eggs to be hatched. These trays are provided with open mesh bottoms 14 upon which the smaller ends of the eggs rest in close and solid formation, and each tray of eggs occupies the upper rack 9 for the first three days, and is then transferred to a place in the upper end of the tilting rack 10. During the next fifteen days the trays in the tilting rack are shifted from higher to lower planes therein and tilted at frequent intervals to stand in oppositely-inclined positions. The tilting of the eggs is preferably arranged to put the eggs substantially on their sides. When the eggs in the lower-most trays in the tilting racks 10 are about ready to hatch each tray is transferred to the stationary rack 12 where the chicks may be removed as occasion requires.

Each tilting rack 10 comprises perpendicular corner bars 15 pivotally united by a series of cross bars 16 carrying connecting angle irons 17 extending from front to rear

at each side and upon which the trays are adapted to be slidably supported. The links 11 are pivotally connected at the center of the uppermost cross bars 16 of each tilting rack, thus permitting an entire series of trays to be placed in an inclined position by merely raising or lowering one side of the rack by hand engagement. The weight and friction and balance of the parts cause the trays to remain in any shifted position, whether horizontal or inclined. The fans or series of fans 18 mounted upon the hinged trap doors 19 forming the ceiling of the central corridor 5 constitute the means for forcing the hot air through the chamber and there are circular openings 20 provided in said doors within which the fans are arranged properly. The longitudinal space 21 above the fans has open communication above the side walls 22 with the upper ends of the rack compartments behind the curtains 3 and 4 and these curtains extend a sufficient distance, as indicated in Fig. 1, to cause the heated air distributed by the fans to pass downwardly through the central corridor to a point near the bottom of the chamber where it can pass into the space occupied by the trays. As explained later the trays near the bottom are preferably arranged so that the air is forced to pass between the eggs in each tray thereby cooling or holding the temperature of those eggs down. Thence the air passes into spaces above the lower series of trays until it reaches the distributing space 21 above the fan. Coils of heating pipe 23 are arranged in the space 21 to heat the air and more or less fresh air may be taken in through the valved opening 24 above the space 21 and this fresh supply of air may be charged with steam to a greater or less degree by means of a valve controlled jet or pipe 26 see Fig. 3. The outlets 28 for the release of foul air are made of such restricted capacity as to prevent the undue escape of moisture. It is possible to limit the openings and so conserve the moisture by reason of the vitalizing effect of the power driven current upon the body of the air within the chamber. By lowering the hinged trap doors, the motor and fan are also easily reached for inspection, etc.

In Fig. 3 only a single curtain 3 is shown in place, the curtain or curtains at the right being entirely removed to disclose the racks and trays in full lines, and it will be also noted that the vertical spaces 27 between the adjacent tilting racks 10 are closed at their lower ends by flexible strips of fabric which are attached to and extend upward at each side of each rack so as to compel the air to circulate through the mesh bottom and around and about each egg as heretofore referred to, and as the eggs further advanced in incubation are contained in these lower trays and as the danger is that the temperature will rise in these eggs to a point injurious to incubation the improved method disclosed herein permits the circulating air to act as a medium to prevent the over heating at this stage of incubation and this is accomplished by promoting an induced draft within the lower trays. It is obvious that the fans can be so arranged and can be operated at such speed as to cause the hot air to circulate fast enough to keep the temperature throughout the chamber between the limits of 100° and 105°.

It, therefore, appears that the improved apparatus and method contemplates the application of hot air circulating in a column with such speed as to keep the temperature substantially uniform and so arranging the eggs that the fresh eggs are placed at one point in the column of air and held in a horizontal plane until they reach a predetermined stage of incubation and then put at a different point in the same column of air and kept in planes inclined to the horizontal and thereafter placed at such a point in the column of air that the forced draft of air acts to hold the eggs at a uniform temperature and to prevent them from becoming overheated and thereafter placing the eggs into final position for the hatching operation.

Any suitable thermostatic means may be employed for regulating the temperature, such for instance as a thermostat commonly employed in incubators of a well-known construction and illustrated in Letters-Patent No. 1,111,138, dated September 22nd, 1914, which thermostat may be suitably connected to the valve controlling the steam or hot water, as the case may be, which passes through the pipes 23.

Having thus described my invention, I claim:—

1. The method of hatching a plurality of eggs by arranging them at different levels in a closed chamber having restricted openings of sufficient capacity for the escape of foul air without undue loss of moisture and applying a current of heated air, said current being created by means other than variations of temperature and of sufficient velocity to circulate, diffuse and maintain the air throughout the chamber at substantially the same temperature, whereby the air will be vitalized, the moisture conserved and the units of heat will be carried from the eggs in the more advanced stage of incubation to those in a less advanced stage for the purpose specified.

2. The method of hatching a plurality of eggs by arranging them at different levels in a closed chamber having restricted openings of sufficient capacity for the escape of foul air without undue loss of moisture and applying a power driven current of heated

air in an adjacent chamber through openings into the egg chamber, said current being of sufficient velocity to circulate, diffuse and maintain the air throughout the egg chamber at substantially the same temperature, whereby the air will be vitalized, the moisture conserved and the units of heat will be carried from the eggs in the more advanced stage of incubation to those in a less advanced stage for the purpose specified.

3. The method of hatching a plurality of eggs by arranging them at different levels in a closed chamber having restricted openings of sufficient capacity for the escape of foul air without undue loss of moisture and applying a vertically directed current of heated air in an adjacent chamber to circulate in said egg chamber through upper and lower openings between said chambers, said current being created by mechanically moving means of such velocity as to diffuse and maintain the air throughout the egg chamber at substantially the same temperature whereby the air will be vitalized, the moisture conserved and the units of heat will be carried from the eggs in the more advanced stage of incubation to those in the less advanced stage for the purpose specified.

4. In an incubator, a closed chamber having a central corridor provided with an air-

distributing space i
a power-driven fan
at each side of sai
permit the air to ci
of the chamber into
behind the curtains,
the air distributing
and the parts of s
curtains, separate
racks behind said c
open-mesh bottom
upon said racks, a
circulated through

5. In an incubato
a vertically dispose
corridor having u
ways to said cham
at different levels i
driven fan creatin
dor to circulate th
and egg trays, s
stricted openings
the discharge of f
of moisture and
culated through s

In testimony wh
my hand this 20t

Witnesses:
HANNAH D
IDA M. SMI

lower trays and as the danger is that the temperature will rise in these eggs to a point injurious to incubation the improved method disclosed herein permits the circulating air to act as a medium to prevent the over heating at this stage of incubation and this is accomplished by promoting an induced draft within the lower trays. It is obvious that the fans can be so arranged and can be operated at such speed as to cause the hot air to circulate fast enough to keep the temperature throughout the chamber between the limits of 100° and 105°.

It, therefore, appears that the improved apparatus and method contemplates the application of hot air circulating in a column with such speed as to keep the temperature substantially uniform and so arranging the eggs that the fresh eggs are placed at one point in the column of air and held in a horizontal plane until they reach a predetermined stage of incubation and then put at a different point in the same column of air and kept in planes inclined to the horizontal and thereafter placed at such a point in the column of air that the forced draft of air acts to hold the eggs at a uniform temperature and to prevent them from becoming overheated and thereafter placing the eggs into final position for the hatching operation.

Any suitable thermostatic means may be employed for regulating the temperature, such for instance as a thermostat commonly employed in incubators of a well-known construction and illustrated in Letters-Patent No. 1,111,138, dated September 22nd, 1914, which thermostat may be suitably connected to the valve controlling the steam or hot water, as the case may be, which passes through the pipes 23.

Having thus described my invention, I claim:—

1. The method of hatching a plurality of eggs by arranging them at different levels in a closed chamber having restricted openings of sufficient capacity for the escape of foul air without undue loss of moisture and applying a current of heated air, said current being created by means other than variations of temperature and of sufficient velocity to circulate, diffuse and maintain the air throughout the chamber at substantially the same temperature, whereby the air will be vitalized, the moisture conserved and the units of heat will be carried from the eggs in the more advanced stage of incubation to those in a less advanced stage for the purpose specified.

2. The method of hatching a plurality of eggs by arranging them at different levels in a closed chamber having restricted openings of sufficient capacity for the escape of foul air without undue loss of moisture and applying a power driven current of heated

air in an adjacent chamber through openings into the egg chamber, said current being of sufficient velocity to circulate, diffuse and maintain the air throughout the egg chamber at substantially the same temperature, whereby the air will be vitalized, the moisture conserved and the units of heat will be carried from the eggs in the more advanced stage of incubation to those in a less advanced stage for the purpose specified.

3. The method of hatching a plurality of eggs by arranging them at different levels in a closed chamber having restricted openings of sufficient capacity for the escape of foul air without undue loss of moisture and applying a vertically directed current of heated air in an adjacent chamber to circulate in said egg chamber through upper and lower openings between said chambers, said current being created by mechanically moving means of such velocity as to diffuse and maintain the air throughout the egg chamber at substantially the same temperature whereby the air will be vitalized, the moisture conserved and the units of heat will be carried from the eggs in the more advanced stage of incubation to those in the less advanced stage for the purpose specified.

4. In an incubator, a closed chamber having a central corridor provided with an air-distributing space in its upper portion and a power-driven fan in said space, curtains at each side of said corridor, arranged to permit the air to circulate from the bottom of the chamber into the part of the chamber behind the curtains, passageways connecting the air distributing space with the corridor and the parts of said chamber behind the curtains, separate stationary and tilting racks behind said curtains, egg-trays having open-mesh bottoms removably mounted upon said racks, and means to heat the air circulated through said chamber.

5. In an incubator, a closed chamber with a vertically disposed partition to provide a corridor having upper and lower passage ways to said chamber, egg trays arranged at different levels in said chamber, a power driven fan creating a current in said corridor to circulate through said passage ways and egg trays, said chamber having restricted openings of sufficient capacity for the discharge of foul air without undue loss of moisture and means to heat the air circulated through said chamber.

In testimony whereof, I have hereunto set my hand this 20th day of October, 1916.

SAMUEL B. SMITH.

Witnesses:

HANNAH D. PLAIN,

IDA M. SMITH.

Ex 2.

No 9119 Exh

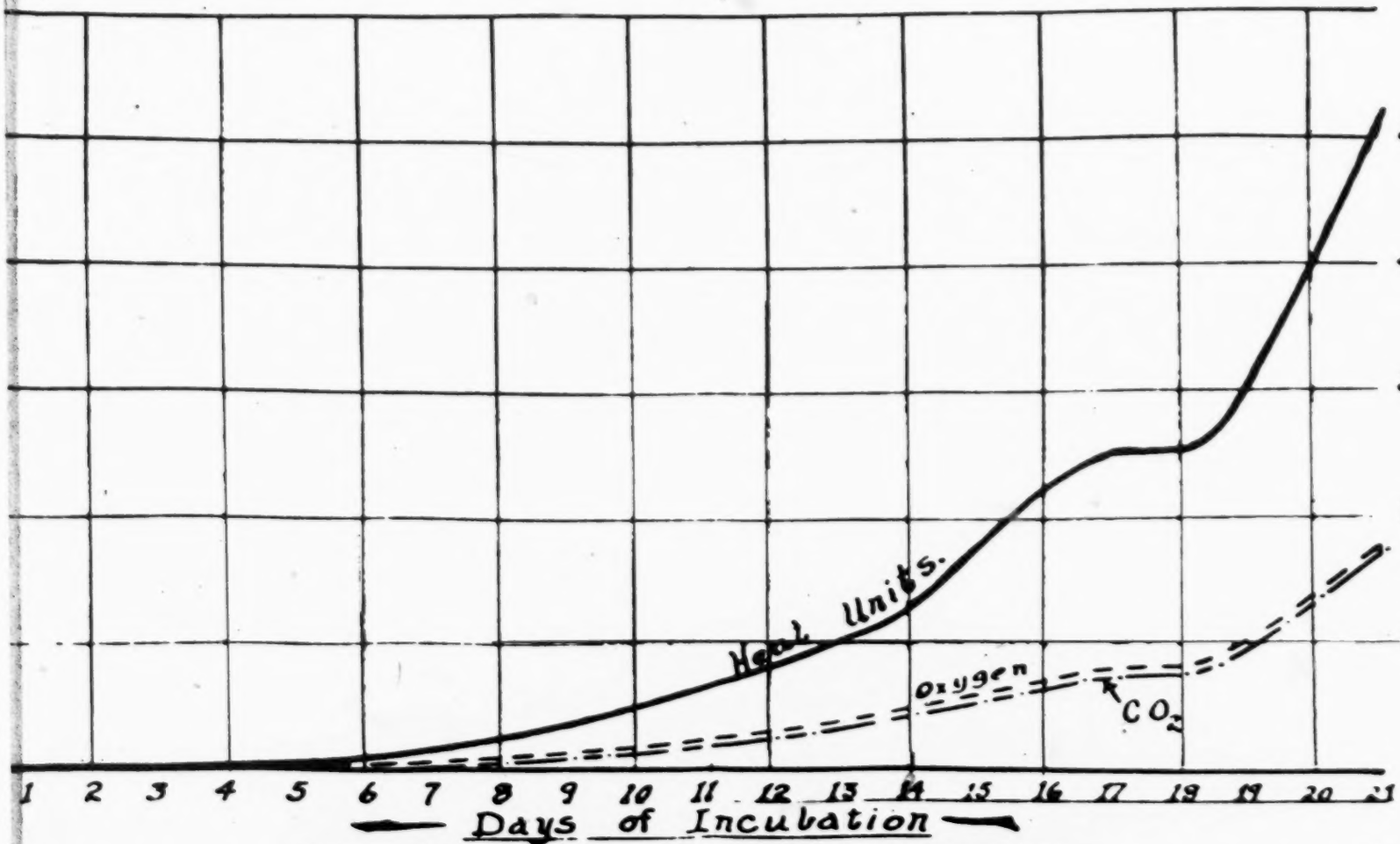

GRAPH SHOWING DEVELOPMENT OF HEAT UNITS DURING INCUBATION.

J. I. T. 18 22 28

ove graph shows the heat development within an in-
ng egg during the 21 days of incubation. The heavy
indicates heat units given off per egg per day.
s shown in calories (.252 calories equal one B.T.U.
per dashed curve indicates the amount of oxygen
d. The lower dashed-dot curve shows the carbon-
e given off. The oxygen and carbon-dioxide are
in grams per egg per day.

the first four days no heat is given off by the
Tests indicate that some heat is absorbed during
eriod. From the fourth day heat is given off by
, which steadily increases with the exception of
h day. On this day the heat given off, and the
consumed, hold steadily about as at the close of
h day. On the 19th day the increasing develop-
heat is resumed in earnest, and doubles between
then and the time of hatching. There has been several explanations why the embryo apparently stands still during the 18th day. Probably the best explanation is that during the first 17 days the chick has been living off of the white of the egg while on the 18th day it begins to assimilate the yolk. This changing food diet probably causes readjustment which temporarily checks development.

The above graphs are the result of studies with calorimeters. The egg is placed within a calorimeter that is maintained at a constant temperature. Proper allowance is made for all heat radiated, and the heat generated within the egg can be measured. At the same time accurate check is kept on all air that passes in and out of the calorimeter, measuring the oxygen consumed and the carbon-dioxide given off. J. I. T. 3/22/30.

Plaintiff's Exhibit 2

Ex 2.

No. 3119 Eib

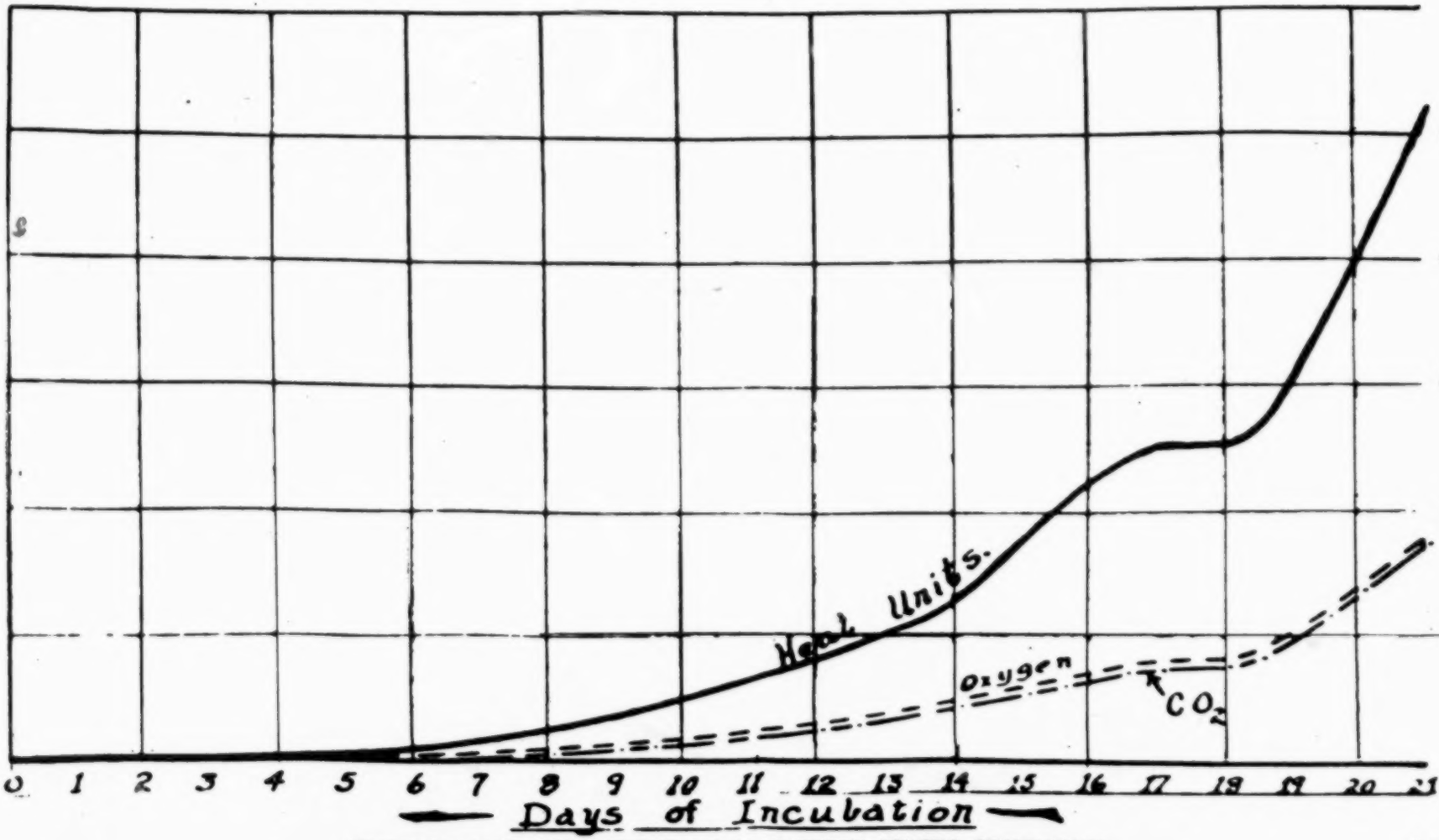

GRAPH SHOWING DEVELOPMENT OF HEAT UNITS DURING INCUBATION.

The above graph shows the heat development within an incubating egg during the 21 days of incubation. The heavy curve indicates heat units given off per egg per day. This is shown in calories (.252 calories equal one B.T.U. The upper dashed curve indicates the amount of oxygen consumed. The lower dashed-dot curve shows the carbon-dioxide given off. The oxygen and carbon-dioxide are shown in grams per egg per day.

During the first four days no heat is given off by the egg. Tests indicate that some heat is absorbed during this period. From the fourth day heat is given off by the egg, which steadily increases with the exception of the 18th day. On this day the heat given off, and the oxygen consumed, hold steadily about as at the close of the 17th day. On the 19th day the increasing development of heat is resumed in earnest, and doubles between then and the time of hatching. There has been several explanations why the embryo apparently stands still during the 18th day. Probably the best explanation is that during the first 17 days the chick has been living off of the white of the egg while on the 18th day it begins to assimilate the yolk. This changing food diet probably causes readjustment which temporarily checks development.

The above graphs are the result of studies with calorimeters. The egg is placed within a calorimeter that is maintained at a constant temperature. Proper allowance is made for all heat radiated, and the heat generated within the egg can be measured. At the same time accurate check is kept on all air that passes in and out of the calorimeter, measuring the oxygen consumed and the carbon-dioxide given off. J. I. T. 3/22/30.

Plaintiff's Exhibit 3

RECORD OF HEAT DEVELOPMENT IN EGGS OF THE RINGED FOWL

AT VARIOUS STAGES OF INCUBATION.

Number of days eggs had been in incubator when tests were started.	Time eggs had been sealed in box when temperature was taken.										
	30 min.	1 hr.	1:30	2 hrs.	2:30	3 hrs.	3:30	4 hrs.	4:30	5 hrs.	5:30
5 days - 12 hours	98.6°	98.7°	98.8°	98.8°	98.8°	98.8°	98.8°	98.8°	98.8°	98.8°	98.8°
7 days - 12 hours	98.7°	98.7°	98.8°	98.9°	99.°	99.°	99°	99.°	99.°	99.°	99.°
9 days - 16 hours	98.6°	98.6°	98.8°	98.8°	98.9°	98.9°	99.°	99.°	99.°	99°	99.°
12 days - 16 hours	99.2°	99.4°	99.6°	100.°	100.2°	100.5°	100.8°	101.1°	101.4°	101.6°	101.8°
14 days - 16 hours	99.2°	99.4°	99.6°	100.2°	100.8°	101.4°	102.°	102.4°	102.8°	103.°	103.°
16 days - 16 hours	100.8°	101.6°	102.4°	103.°	103.6°	104.2°	104.6°	105.°	106.°	107.°	107.°
18 days - 16 hours	101.4°	102.2°	102.8°	103.2°	104.°	105.2°	105.6°	106.°	106.6°	107.2°	107.2°
19 days - 16 hours (Eggs Pipped)	102.6°	104.2°	105.2°	106.°	106.6°	107.°	107.2°	107.5°	107.8°	108°	108.°
20 days - 16 hours	101.8	102.4°	103.2°	104.2°	105.4°	106.8°	108.°	108.6°	109.6°	109.8°	110°
20 days - 16 hours (Eggs Pipped)	103.°	105.°	106.2°	107.4°	108.6°	109.8°	110.4°	111.°	Top of thermometer.		

Temperature of incubator during tests - 99°

When an egg is placed in an incubator, it soon assumes the temperature of the surrounding air. If the egg is fertile and the environment proper, the germ within the egg will grow and develop into a baby chick. For the egg of the common fowl this process takes approximately twenty-one days. During this development from the minute germ spot to the baby chick, all of the original egg with the exception of the shell and about one-fifth of the water content is utilized as food. This growing organism also takes in the necessary oxygen and gives off a corresponding amount of carbon dioxide. This assimilation of food and oxygen produces heat. That is a natural result in any growing animal.

The tests recorded above were made to show this heat development at various stages of incubation. The tests were made in Smith incubators operating in their normal way at 99° Fahrenheit and with a wet bulb temperature of 85°-87°. In each test well insulated boxes, such as shown in the attached photograph, were placed in the incubator for one hour before starting the tests. During this time, the lids were removed so that the interior of the boxes would assume the temperature of the incubator. Twelve fertile eggs of a known stage of incubation were then placed in each box, the lid tightly closed, and the edges sealed with adhesive tape. A tested clinical thermometer was then inserted through the side of the box as shown in the photograph. The bulb was completely within the box, but the temperature of the interior could be read from without. In each case the thermometer was cooled below 90° before inserting it in the box. The sealed box of eggs was then placed on the floor of the incubator and the temperature as shown by the thermometer was recorded at intervals of thirty minutes.

With this arrangement, if the eggs in any box were far enough along in incubation to develop an appreciable amount of heat, the temperature within the box would rise according to the rate of heat development. While this method is not accurate enough to record the heat developed by the eggs during the first ten days, it does show this development nicely for the latter half of the incubating period.

The above record is a summary of tests made at different times during the past two years. Eggs from widely different flocks and breeds of chickens were used.

J.I.P. 11/6/22

Plaintiff's Exhibit 4

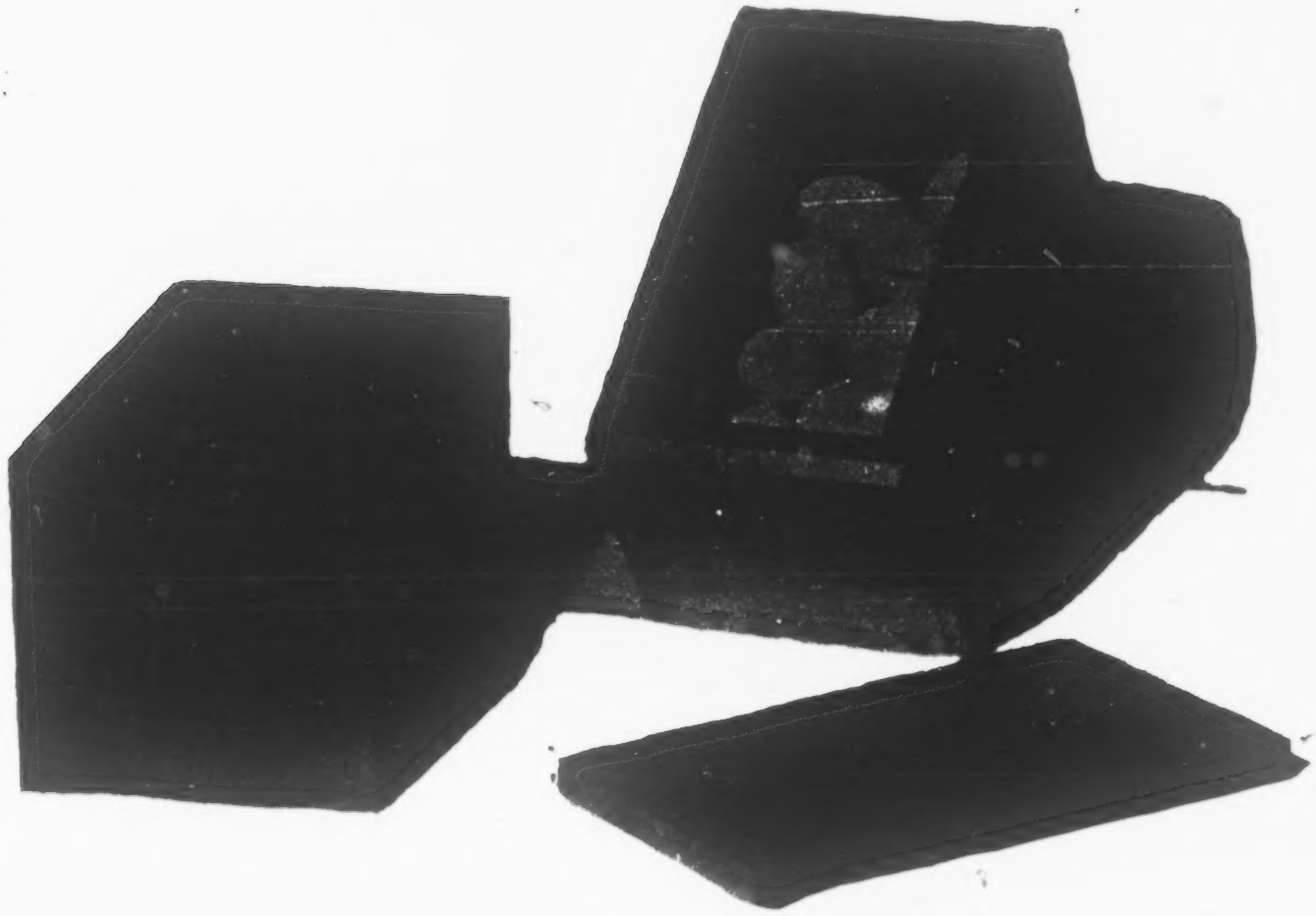

1478

Plaintiff's Exhibit 5

Pltf Exs 5

No. 2119 Eq

111

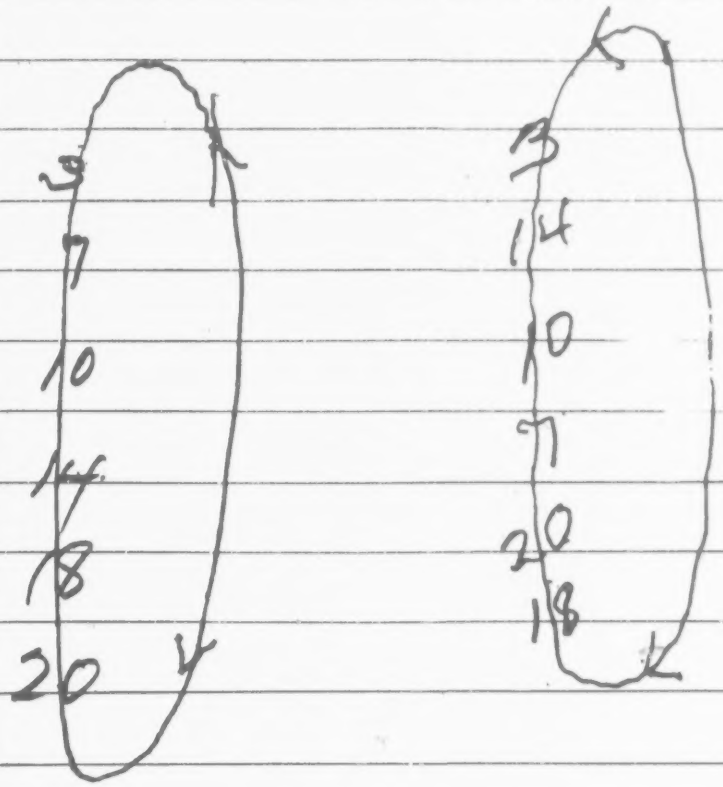

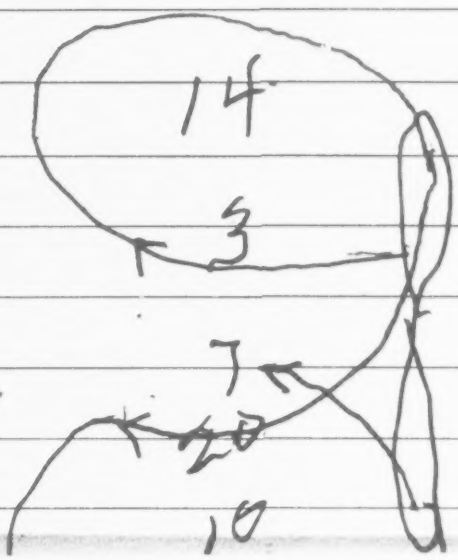

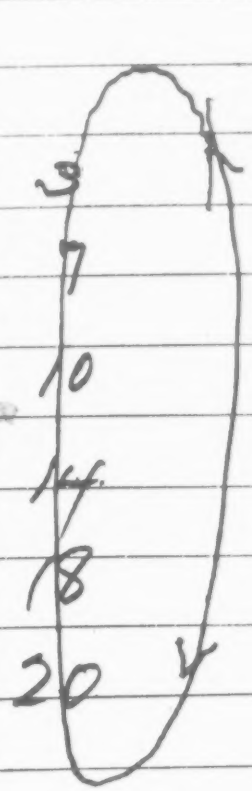
3
7
10
14
18
20

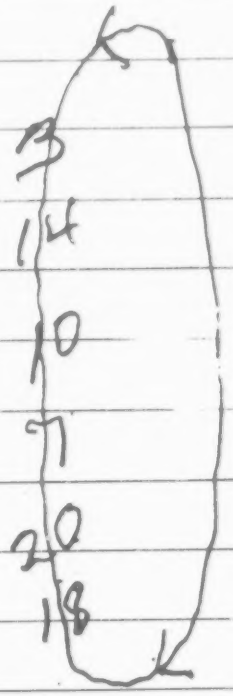
3
14
10
7
20
18

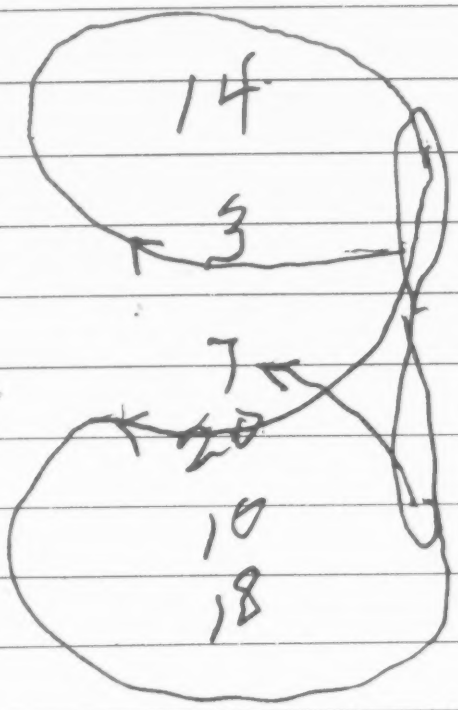
14
3
7
20
10
18

Plaintiff's Exhibit 6

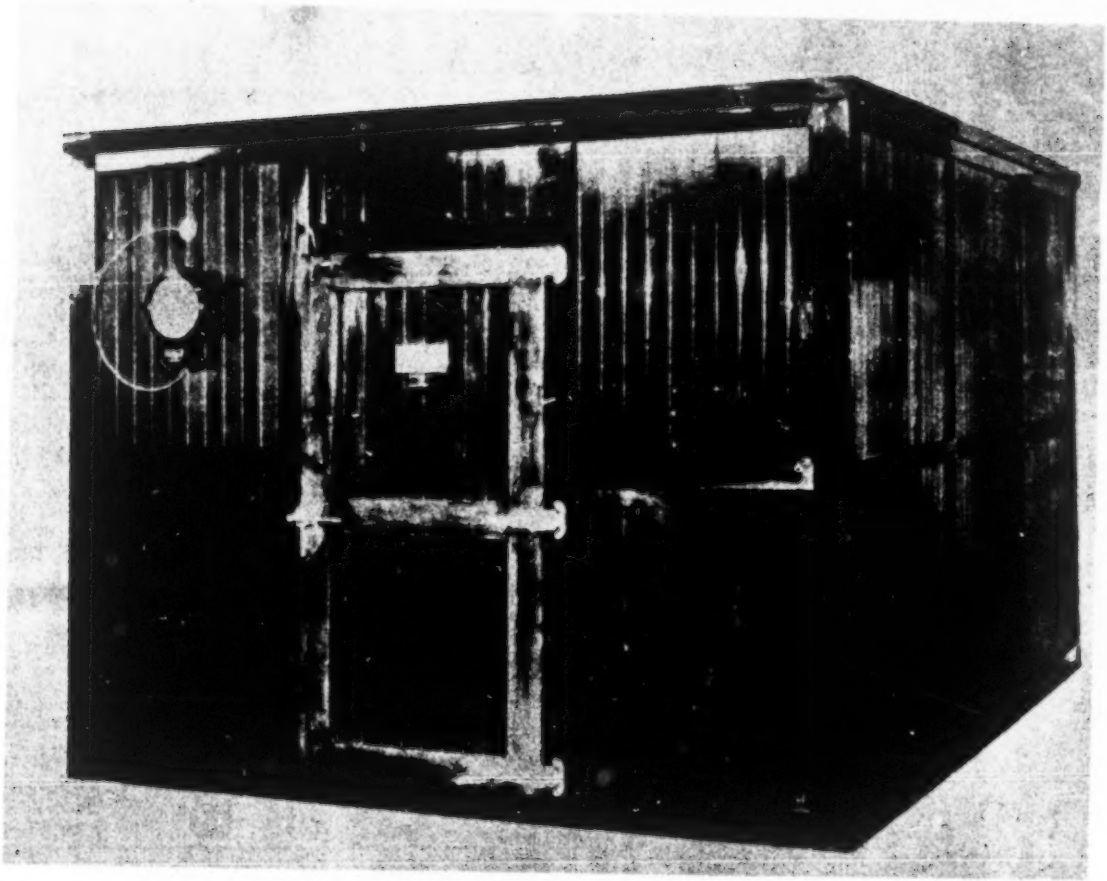

Plaintiff's Exhibit 6A

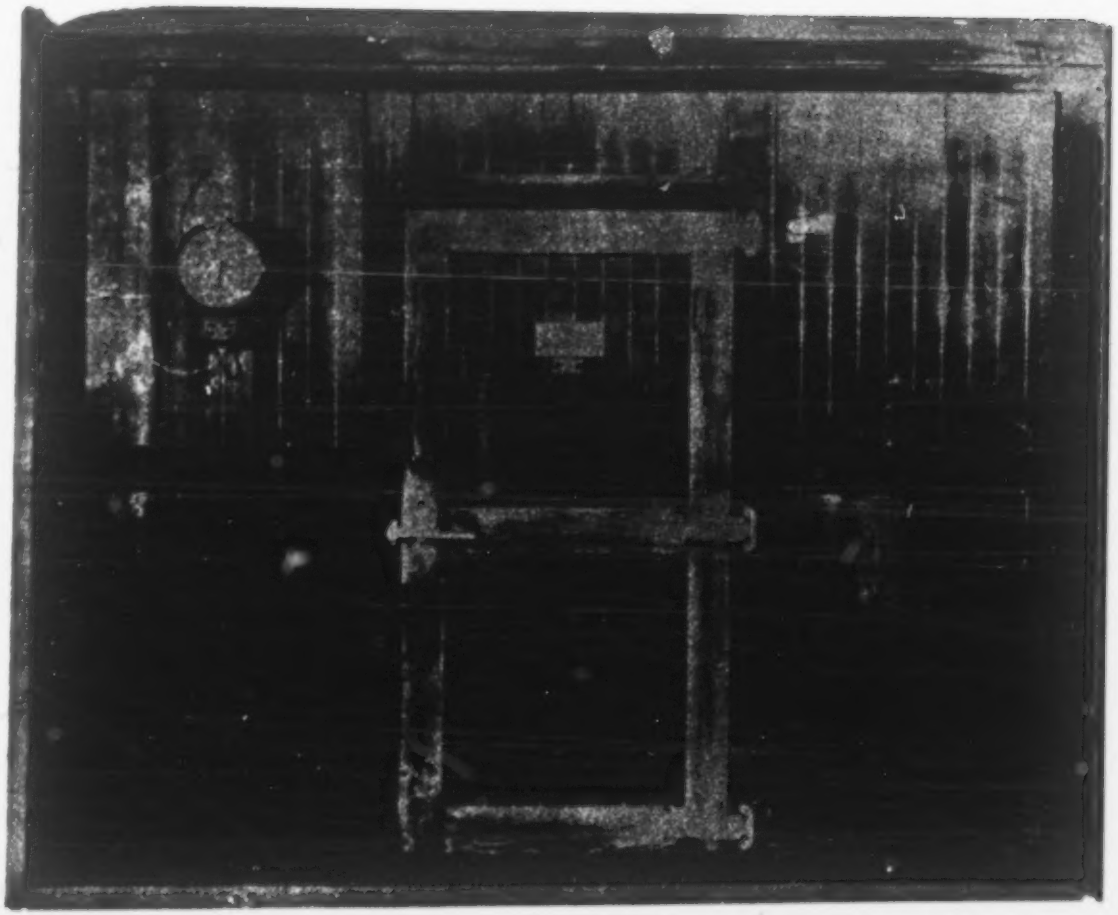

Plaintiff's Exhibit 6B

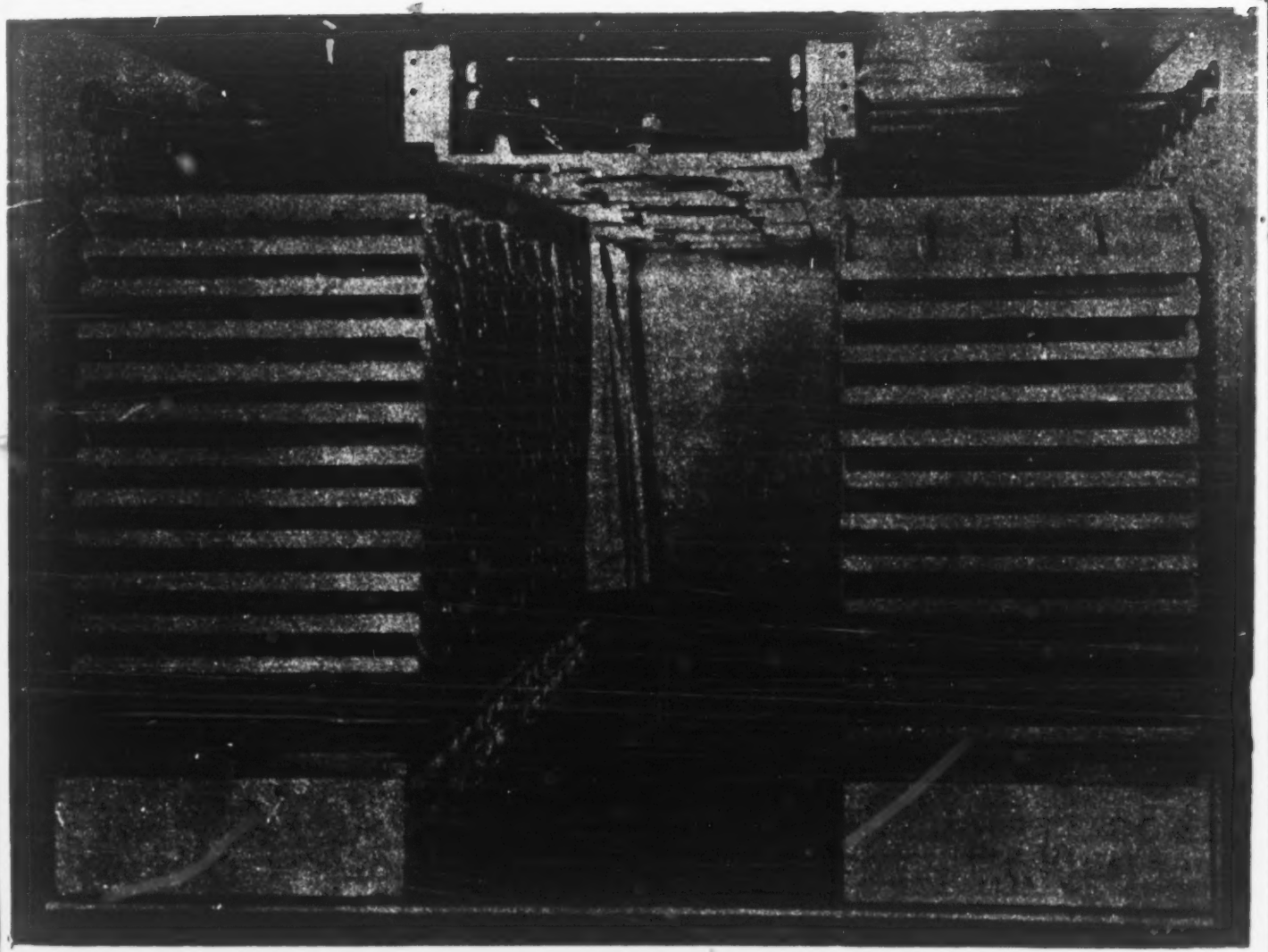

Plaintiff's Exhibit 6C

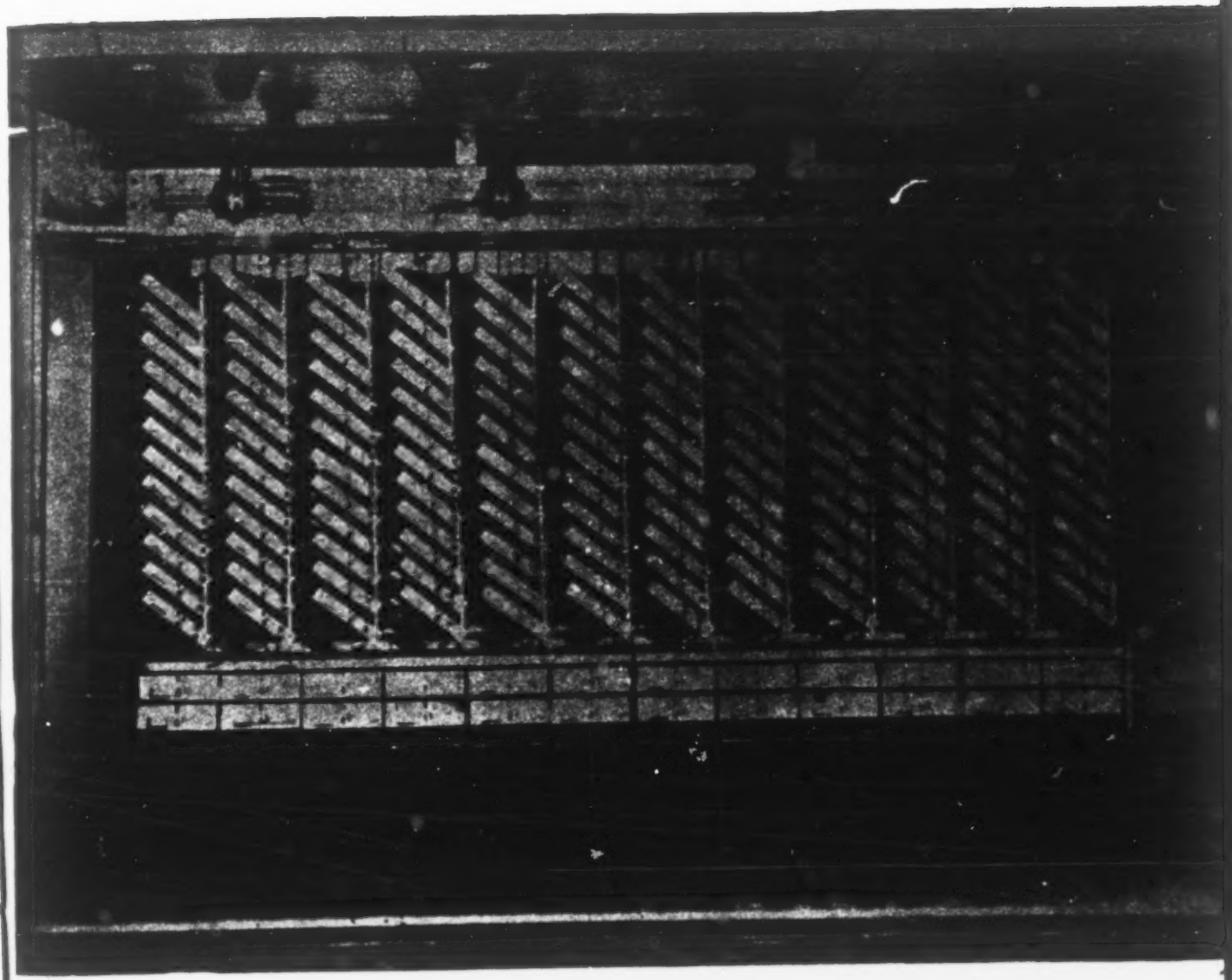

SMITH INCUBATOR

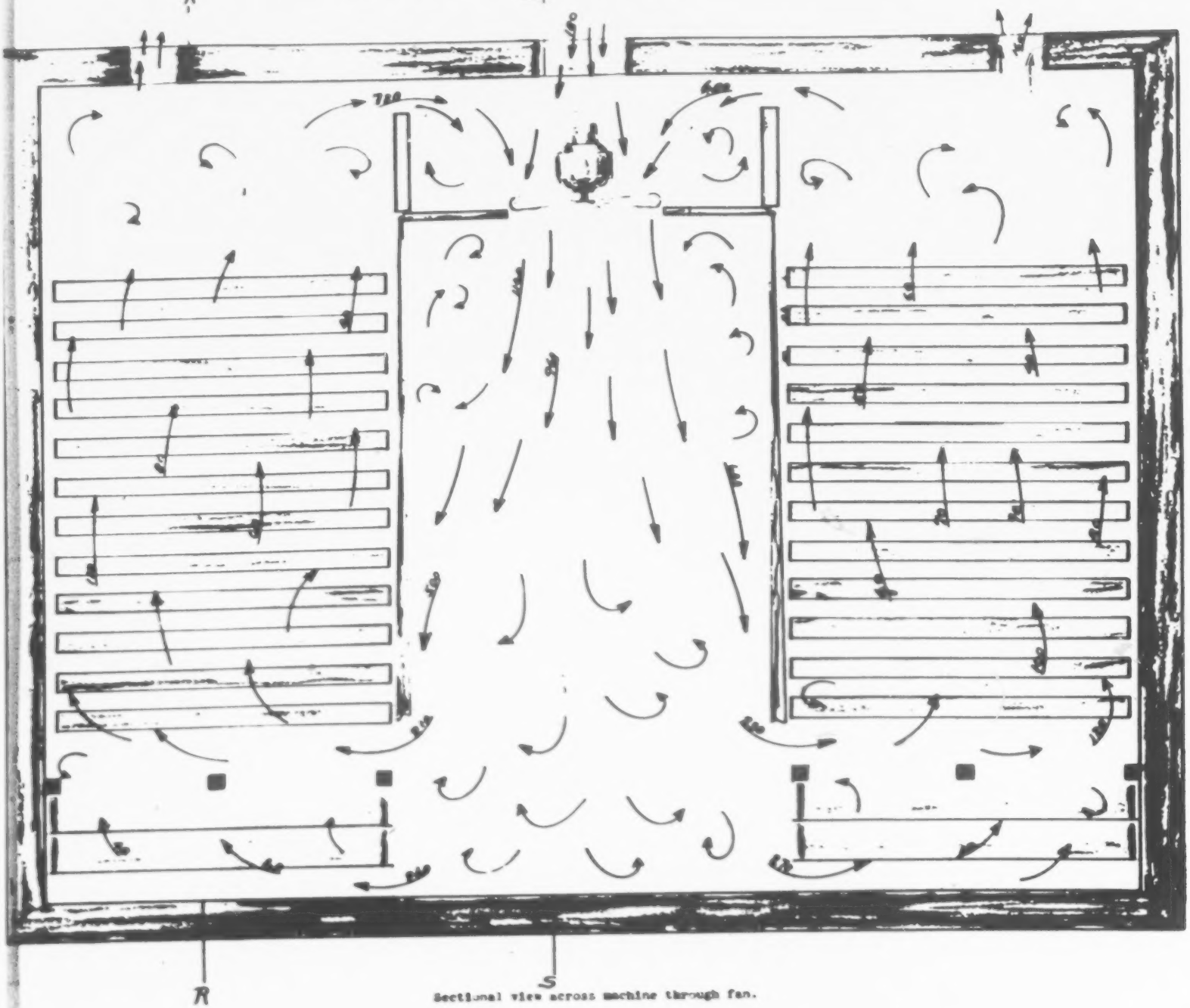

R S

Sectional view across machine through fan.

arrows show general direction of air currents. Numbers give approximate speed of currents as recorded by anemometer (Diram).

Readings in lower two trays were taken with anemometers in the trays.

Fans were rotating 1630 to 1650 R. P. M.

Air which passes from corridor under lower two trays goes through the trays to space above. In upper twelve trays a very small per cent of the air which has come from the corridor passes through the tray. The large portion of it goes up the air columns between the trays.

The long arrows sweeping across sides of upper twelve trays show currents between tray columns.

Plaintiff's Exhibit 7

SMITH INCUBATOR

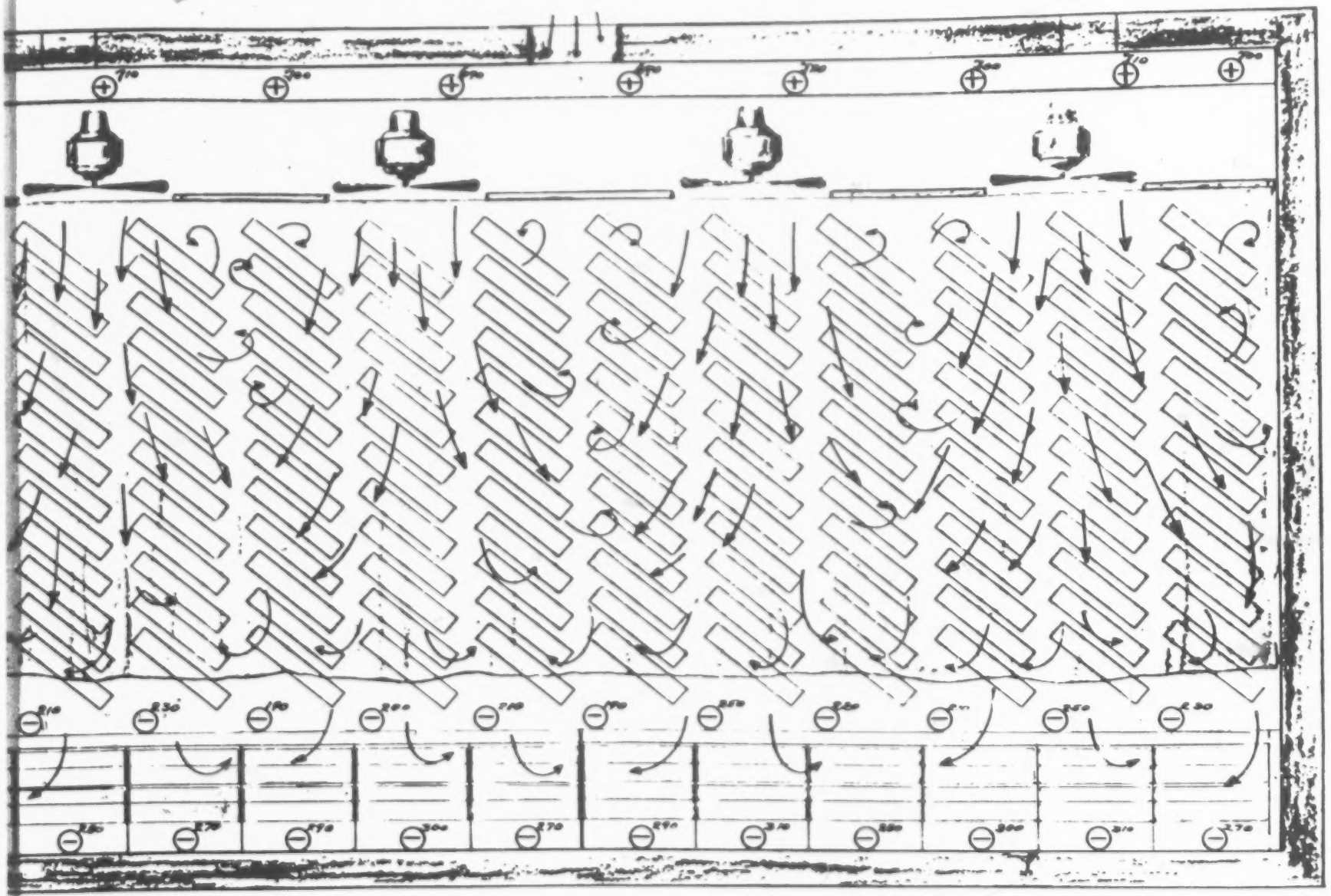

Diagrammatic sectional view along corridor. S S

⊕ — Shows position of anemometer, direction of air flow, and approximate speed of air currents.

⊖ — Air flowing away from fan.

⊕ — Air flowing to the fan.

Anemometer readings shown here were taken with

Shaded portion covering upper twelve trays represents curtain in operating position.

Arrows show general direction of air currents in corridor. Approximate speed of these arrows as recorded by anemometer is given in "Section view across machine through fans".

Fans were rotating [illegible]

Plaintiff's Exhibit 7A

451

SMITH INCUBATOR

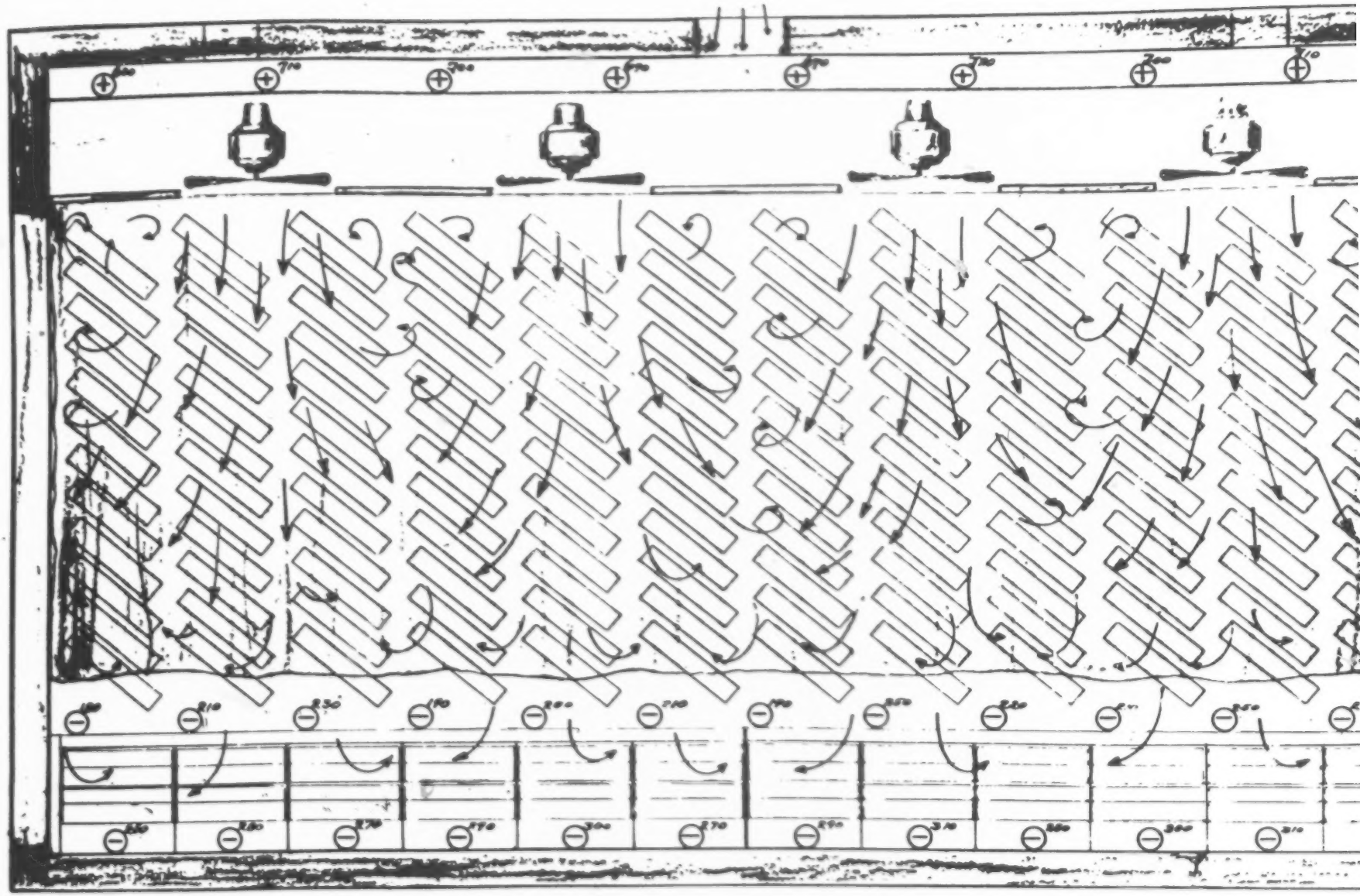

Diagrammatic sectional view along corridor. S S

⊕ 100 — Shows position of anemometer, direction of air flow, and approximate speed of air currents.

⊖ — Air flowing away from fan.

⊕ — Air flowing to the fan.

Anemometer readings shown here were taken with anemometer parallel to corridor.

Shaded portion covering upper twelve trays represents curtain in operating position.

Arrows show general direction of air currents in corridor. Approximate speed of these arrows as recorded by anemometer is given in "Section view across machine through fan".

Fans were rotating [illegible] R.P.M.

SMITH INCUBATOR

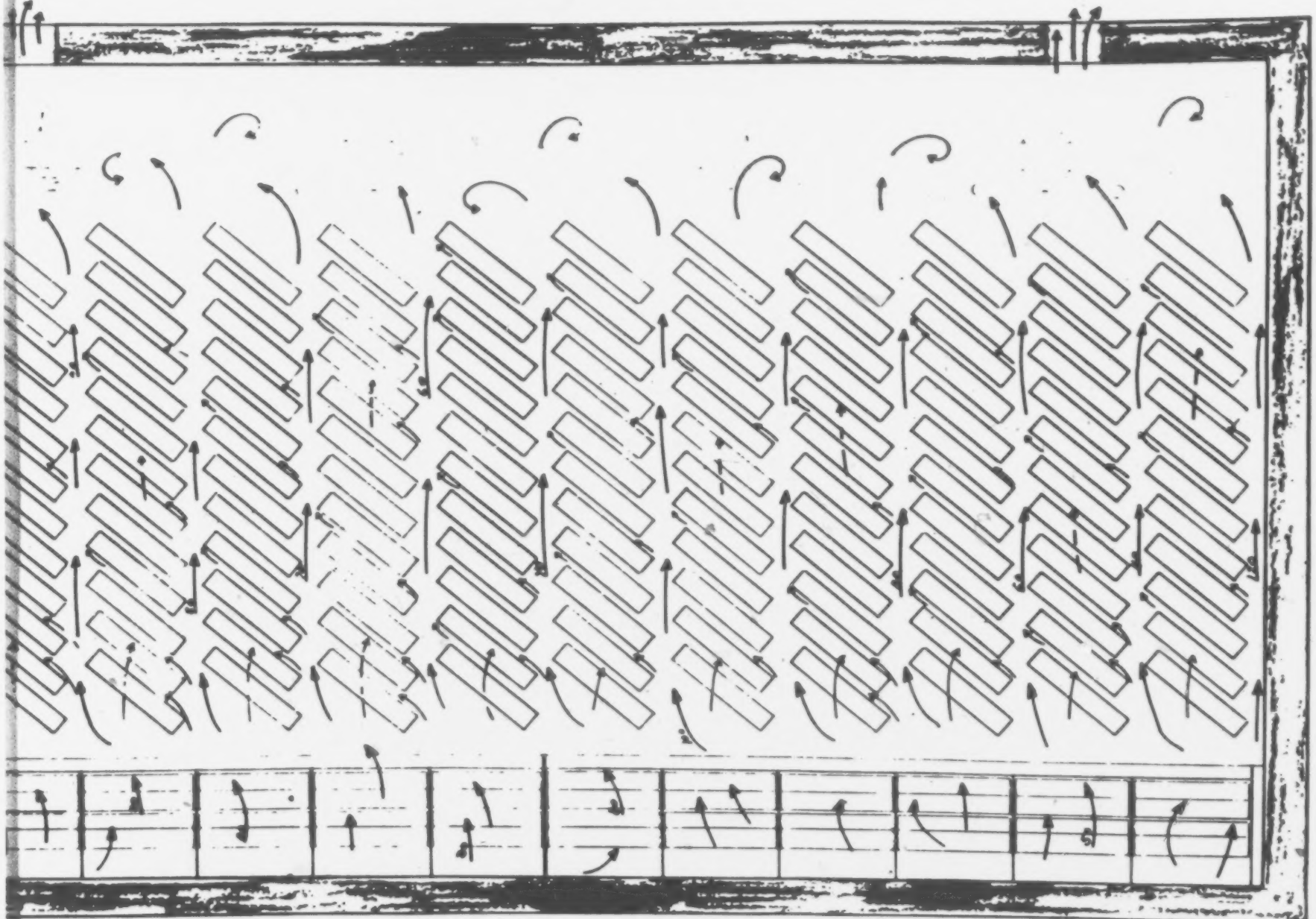

Sectional view in plane parallel to corridor and midway between front and rear of trays. R R

Arrows show general direction of air currents.

Numbers give approximate speed of air currents as recorded by anemometer (Biram). Air which passes from corridor under lower two trays goes through the trays to space above. In upper twelve trays a very small per cent of the air which has come from the corridor passes through the tray. The large portion of it goes up the air columns between the trays.

Plaintiff's Exhibit 7 B

SMITH INCUBATOR

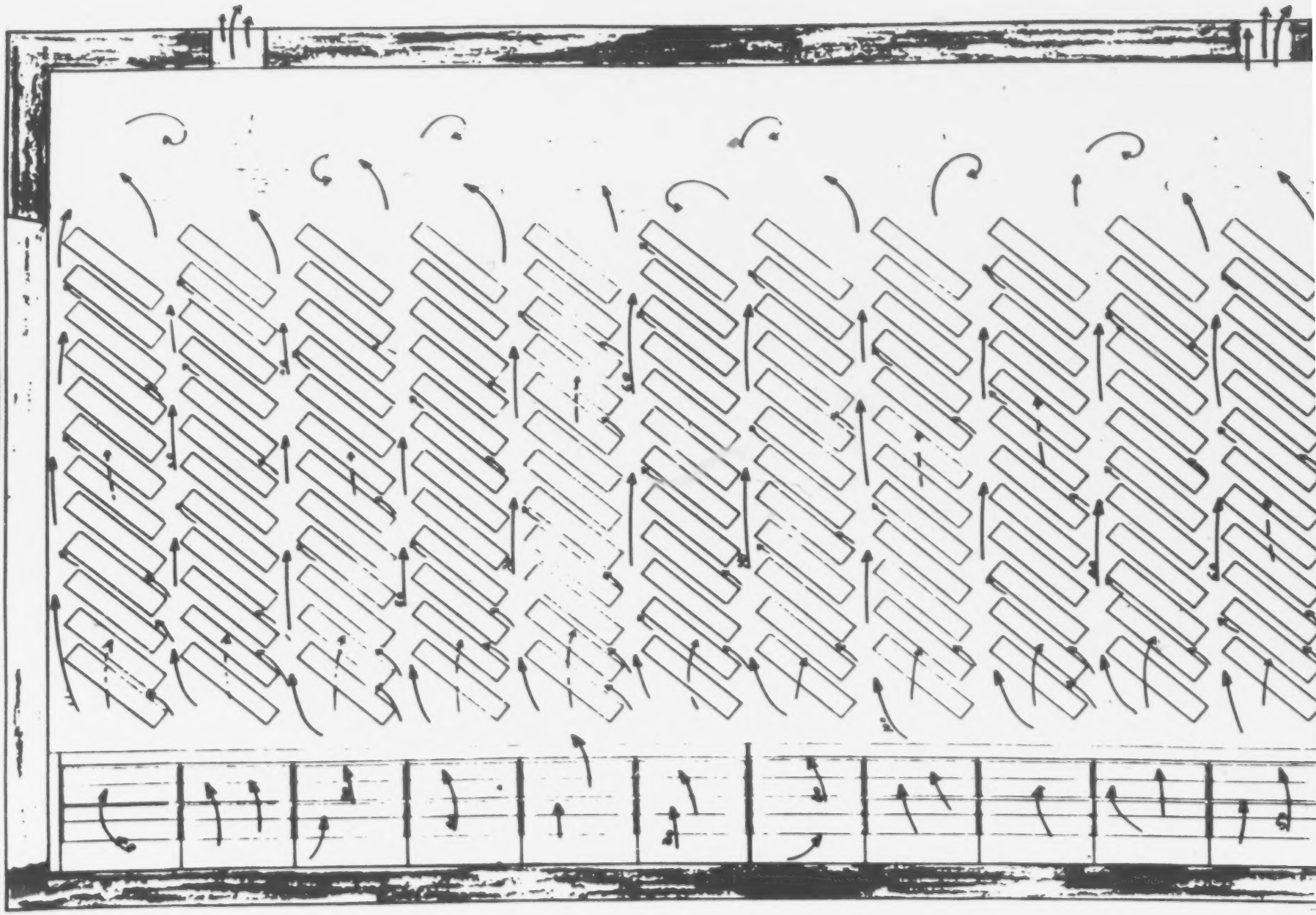

Sectional view in plane parallel to corridor and midway between front and rear of trays. R R

Arrows show general direction of air currents.

Numbers give approximate speed of air currents as recorded by anemometer (Biram). Air which passes from corridor under lower two trays goes through the trays to space above. In upper twelve trays a very small per cent of the air which has come from the corridor passes through the tray. The large portion of it goes up the air columns between the trays.

672 Plaintiff's Exhibits.

8)
8A) Snow Advertisements
8B)

To Be Treated And Dealt With
Under Provisions of C. C. A.
Rule 34.

Plaintiff's Exhibit 9

9

City Leroy State Minn Date July 3, 193

Street ____ County Mower, R. F. D. ____

To Snow's Incubator Company,
Sleepy Eye, Minnesota.

Please enter my (our) order for One Snow's Incubator (45,000) ~~(51,000)~~ egg capacity F. O. B. Leroy

The list price of said incubator is 4000. If this order is signed between the dates of June 15th, 193__, and January 1st, 193__, purchaser will receive off the list price, a discount amounting to ____ per day for each day from the date of signing this order up to January 1st, 193__.

Purchaser will receive a further discount of 200 off the list price, provided full payment shall have been made in cash to Snow's Incubator Company on or before the date said incubator is erected.

In consideration thereof I (we) agree to make the following payments to the order of Snow's Incubator Company at Sleepy Eye, Minnesota, to wit:

Cash payment with order $500.00

One deferred payment, due May 1st, 193 Balance of $3300.00 payable

One deferred payment, due June 1st, 193 when Machine is erected and

One deferred payment, due May 1st, 193 tested to owners approval

One deferred payment, due June 1st, 193 $____

Said deferred payments to be evidenced by notes, said notes to be dated and signed concurrently with this order, and to bear interest at the rate of six per cent per annum from and after October 1st, 193__.

This order is subject to the following conditions and provisions:

1. I (we) agree to transport the above incubator from railroad station to place where same is to be erected at my (our) expense, without delay and I (we) agree to pay all demurrage charges caused by my (our) delay in transporting same after arrival of goods at designated depot.

2. Snow's Incubator Company agrees to erect said incubator without expense to me (us) and to test same by factory expert provided by Snow's Incubator Company for one day free of charge to me (us), said test to be made on or before ____, provided building is ready for occupancy 30 days prior to said date.

3. Snow's Incubator Company is not to be held responsible for any delay in the completion of this contract caused by strikes, fires, floods, unavoidable accidents, war, delays in transportation, or any act of God, or other causes beyond its control, and in such case the time for completion of this contract shall be proportionately extended.

4. Title to the within described property shall remain in the Snow's Incubator Company until the entire purchase price thereof and any note or notes including renewals given therefor, or any judgment for the whole or any part thereof has been paid in full, no matter by what manner or whatever degree said property may be attached to the realty, and I (we) hereby agree not to remove the said property from the place of original delivery so long as any part of the purchase price remains unpaid without first securing the written consent of the Snow's Incubator Company.

5. I (we) further agree to assume the risk of loss and damage to said property and in case of any damage to said property by fire, water or any other cause, I (we) agree to pay to said Snow's Incubator Company the amount of such damage, and in case of destruction thereof from any cause, to pay the above valuation, less any proportion of the purchase price which may have been paid, and I (we) agree to have said property fully insured in standard insurance companies at my (our) own expense, with loss payable to said Snow's Incubator Company as its interest may appear, and if I (we) fail to have said property insured, then the Snow's Incubator Company may have the same fully insured and charge the premium to me (us), which shall be added to the purchase price of said property.

6. In case of my (our) failure to make any payment in time or in the manner as herein provided, the entire unpaid balance of purchase price shall become immediately due and payable, and the Snow's Incubator Company, or its agents, may without legal process, re-take said property and operate same on the premises for the remainder of the hatching season for its own profit; and in any such event I (we) hereby agree to allow you free and unhindered access on the premises or in the building where said property is situated, or to make delivery of said property to you immediately upon request.

7. In the event of the Snow's Incubator Company retaking said property as above provided, any amount that may have been paid thereon shall be considered as payment for use, ordinary wear and depreciation of said property while in my (our) possession, and shall be retained by Snow's Incubator Company. If the amount so paid does not cover the reasonable rental value of said property, then I (we) hereby agree to pay you on demand the balance of such reasonable rental. Nothing in this order shall be construed as obligating the Snow's Incubator Company to accept return of property tendered in lieu of purchase price agreed to be paid.

8. All statutory provisions as to retaking and resale of the property within described are hereby expressly waived. If a claim hereunder is placed in attorney's hands for collection, ten per cent (10%) shall be added thereto and paid as attorney's fees.

9. Said Incubator is guaranteed by Snow's Incubator Company to be of good workmanship and material and any defective part will be replaced any time within one year from date of erection.

10. This order covers all agreements between the Snow's Incubator Company and me (us), either expressed or implied; and when approved by said company at its executive office becomes a contract between the parties as purchaser and seller, respectively. It is expressly agreed that the original hereof has been unconditionally released and delivered for transmission to the Snow's Incubator Company, and that any notice or communication relating hereto or contemplated, hereby shall be made in writing to said Company at Sleepy Eye, Minnesota, and not otherwise.

Witness: Ronald A Bloodhart (Signed) Ralph Kuljeknus

By ____

This order is subject to Approval of the Snow's Incubator Company at Sleepy Eye, Minnesota.

Approved at Sleepy Eye, Minnesota. SNOW'S INCUBATOR COMPANY.

Street _____ County Mower, R. F. D. _____

To Snow's Incubator Company,
Sleepy Eye, Minnesota.

Please enter my (our) order for One Snow's Incubator (45,000) ~~(51,000)~~ egg capacity F. O. B. Leroy

The list price of said incubator is 4000. If this order is signed between the dates of June 15th, 193____, and January 1st, 193____, purchaser will receive off the list price, a discount amounting to _____ per day for each day from the date of signing this order up to January 1st, 193____.

Purchaser will receive a further discount of 200.00 off the list price, provided full payment shall have been made in cash to Snow's Incubator Company on or before the date said incubator is erected.

In consideration hereof I (we) agree to make the following payments to the order of Snow's Incubator Company at Sleepy Eye, Minnesota, to wit:

Cash payment with order $500.00 Balance of $3300.00 payable when Machine is erected and tested to owners aproval

One deferred payment, due May 1st, 193 _____

One deferred payment, due June 1st, 193 _____

One deferred payment, due May 1st, 193 _____ $_____

One deferred payment, due June 1st, 193 _____ $_____

Said deferred payments to be evidenced by notes, said notes to be dated and signed concurrently with this order, and to bear interest at the rate of six per cent per annum from and after October 1st, 193____.

This order is subject to the following conditions and provisions:

1. I (we) agree to transport the above incubator from railroad station to place where same is to be erected at my (our) expense, without delay and I (we) agree to pay all demurrage charges caused by my (our) delay in transporting same after arrival of goods at designated depot.

2. Snow's Incubator Company agrees to erect said incubator without expense to me (us) and to test same by factory expert provided by Snow's Incubator Company for one day free of charge to me (us), said test to be made on or before _____, provided building is ready for occupancy 30 days prior to said date.

3. Snow's Incubator Company is not to be held responsible for any delay in the completion of this contract caused by strikes, fires, floods, unavoidable accidents, war, delays in transportation, or any act of God, or other causes beyond its control, and in such case the time for completion of this contract shall be proportionately extended.

4. Title to the within described property shall remain in the Snow's Incubator Company until the entire purchase price thereof and any note or notes including renewals given therefor, or any judgment for the whole or any part thereof has been paid in full, no matter by what manner or whatever degree said property may be attached to the realty, and I (we) hereby agree not to remove the said property from the place of original delivery so long as any part of the purchase price remains unpaid without first securing the written consent of the Snow's Incubator Company.

5. I (we) further agree to assume the risk of loss and damage to said property and in case of any damage to said property by fire, water or any other cause, I (we) agree to pay to said Snow's Incubator Company the amount of such damage, and in case of destruction thereof from any cause, to pay the above valuation, less any proportion of the purchase price which may have been paid, and I (we) agree to have said property fully insured in standard insurance companies at my (our) own expense, with loss payable to said Snow's Incubator Company as its interest may appear, and if I (we) fail to have said property insured, then the Snow's Incubator Company may have the same fully insured and charge the premium to me (us), which shall be added to the purchase price of said property.

6. In case of my (our) failure to make any payment in time or in the manner as herein provided, the entire unpaid balance of purchase price shall become immediately due and payable, and the Snow's Incubator Company, or its agents, may without legal process, re-take said property and operate same on the premises for the remainder of the hatching season for its own profit; and in any such event I (we) hereby agree to allow you free and unhindered access on the premises or in the building where said property is situated, or to make delivery of said property to you immediately upon request.

7. In the event of the Snow's Incubator Company retaking said property as above provided, any amount that may have been paid thereon shall be considered as payment for use, ordinary wear and depreciation of said property while in my (our) possession, and shall be retained by Snow's Incubator Company. If the amount so paid does not cover the reasonable rental value of said property, then I (we) hereby agree to pay you on demand the balance of such reasonable rental. Nothing in this order shall be construed as obligating the Snow's Incubator Company to accept return of property tendered in lieu of purchase price agreed to be paid.

8. All statutory provisions as to retaking and resale of the property within described are hereby expressly waived. If a claim hereunder is placed in attorney's hands for collection, ten per cent (10%) shall be added thereto and paid as attorney's fees.

9. Said Incubator is guaranteed by Snow's Incubator Company to be of good workmanship and material and any defective part will be replaced any time within one year from date of erection.

10. This order covers all agreements between the Snow's Incubator Company and me (us), either expressed or implied; and when approved by said company at its executive office becomes a contract between the parties as purchaser and seller, respectively. It is expressly agreed that the original hereof has been unconditionally released and delivered for transmission to the Snow's Incubator Company, and that any notice or communication relating hereto or contemplated, hereby shall be made in writing to said Company at Sleepy Eye, Minnesota, and not otherwise.

Witness: Donald B. Mosher (Signed) Ralph Hopkins

By _____

This order is subject to Approval of the Snow's Incubator Company at Sleepy Eye, Minnesota.
Approved at Sleepy Eye, Minnesota.

SNOW'S INCUBATOR COMPANY.

This _____ day of _____, 19____ By E. H. Snow

Date received at home office of Snow's Incubator Co. _____

Delivery to be made between July 6 - 8 - 1931

Plaintiff's Exhibit 10

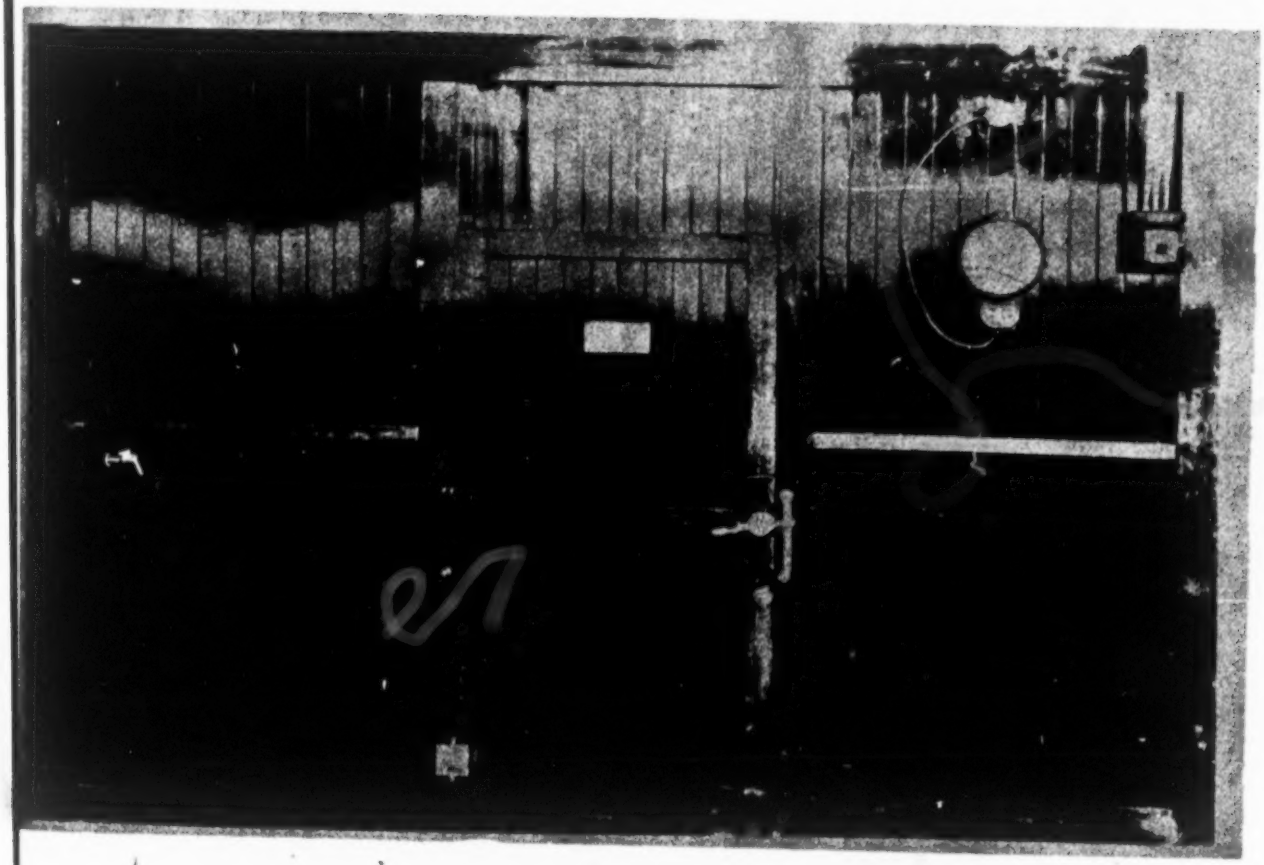

Plaintiff's Exhibit 10A

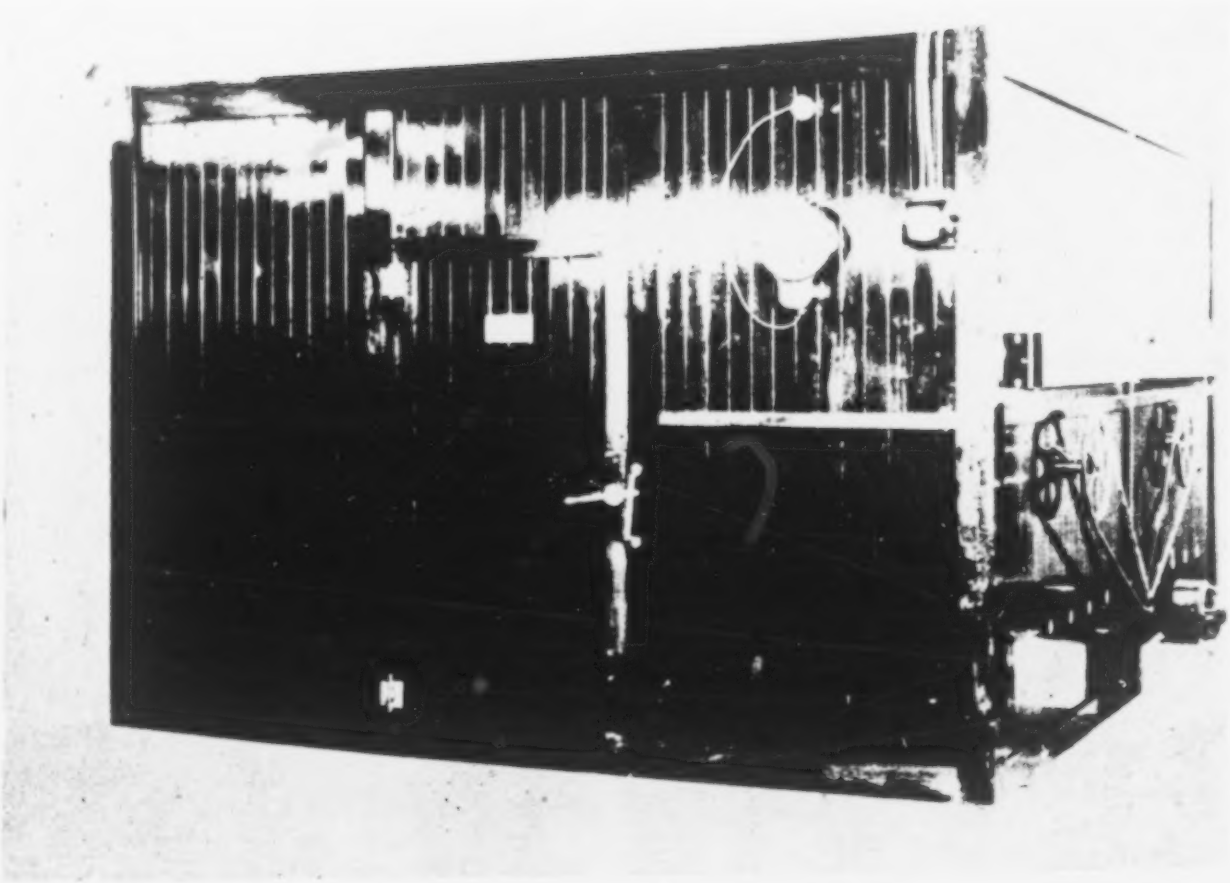

Plaintiff's Exhibit 10 B

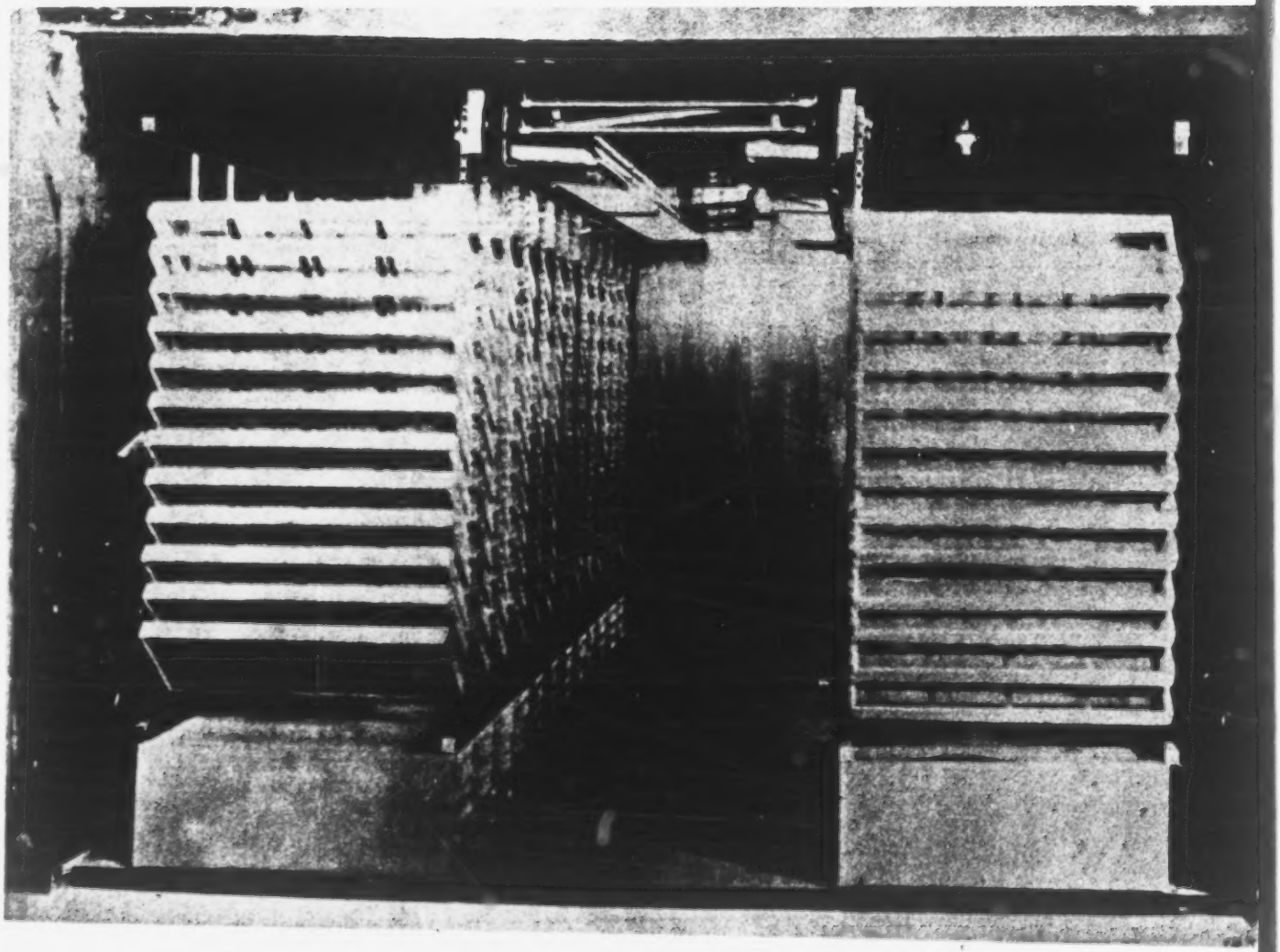

Plaintiff's Exhibit 10C

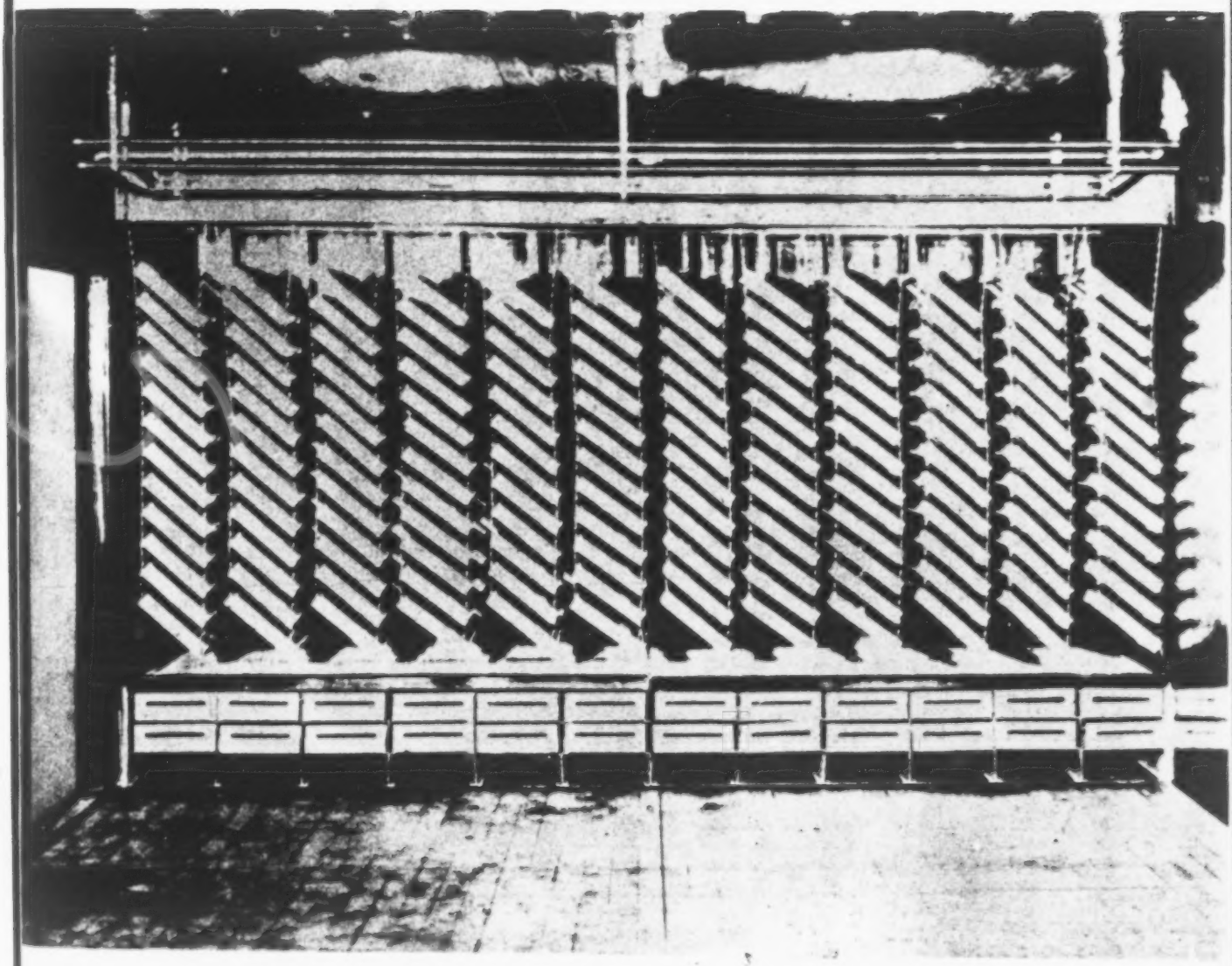

Plaintiff's Exhibit 10 D

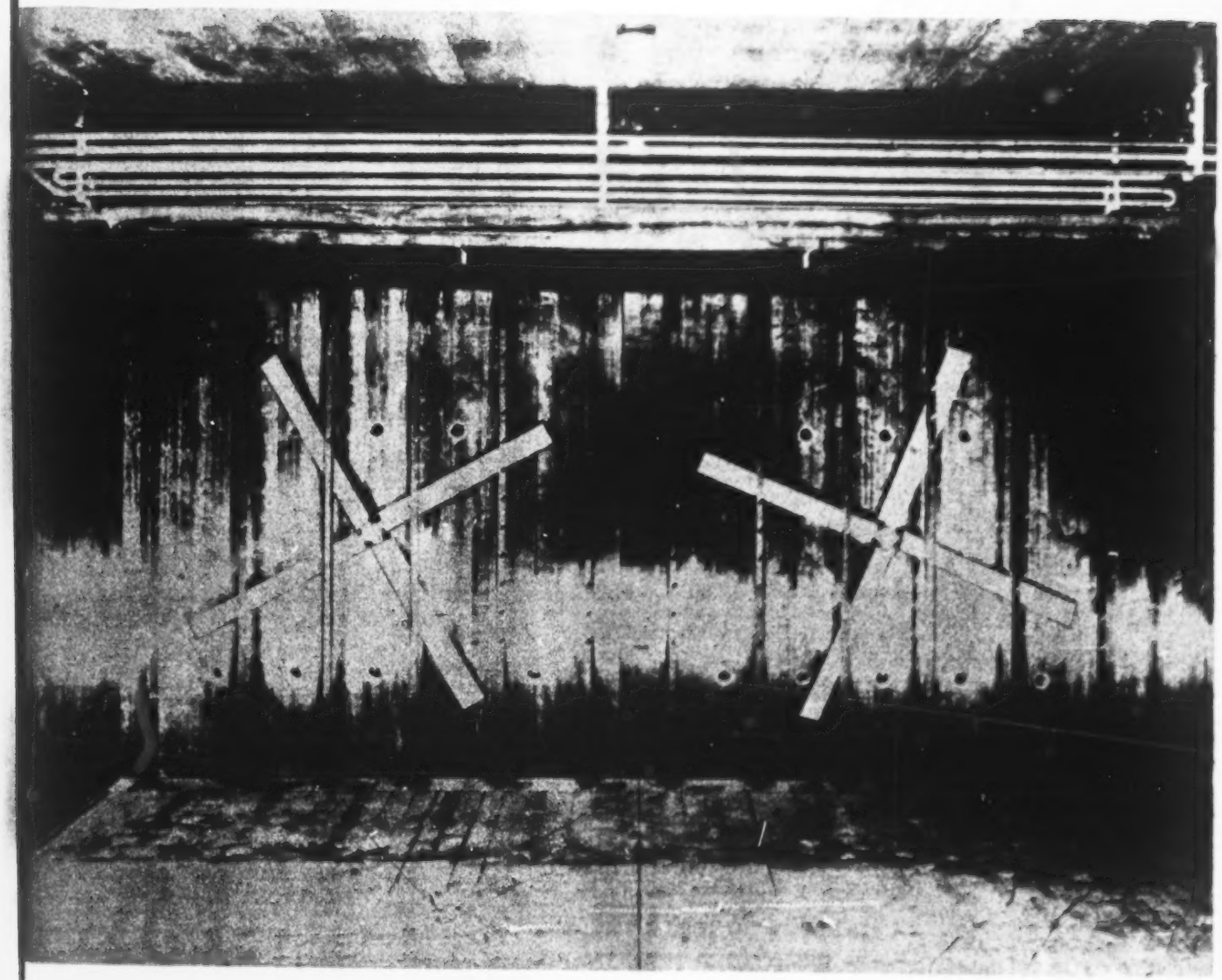

Plaintiff's Exhibit 10E

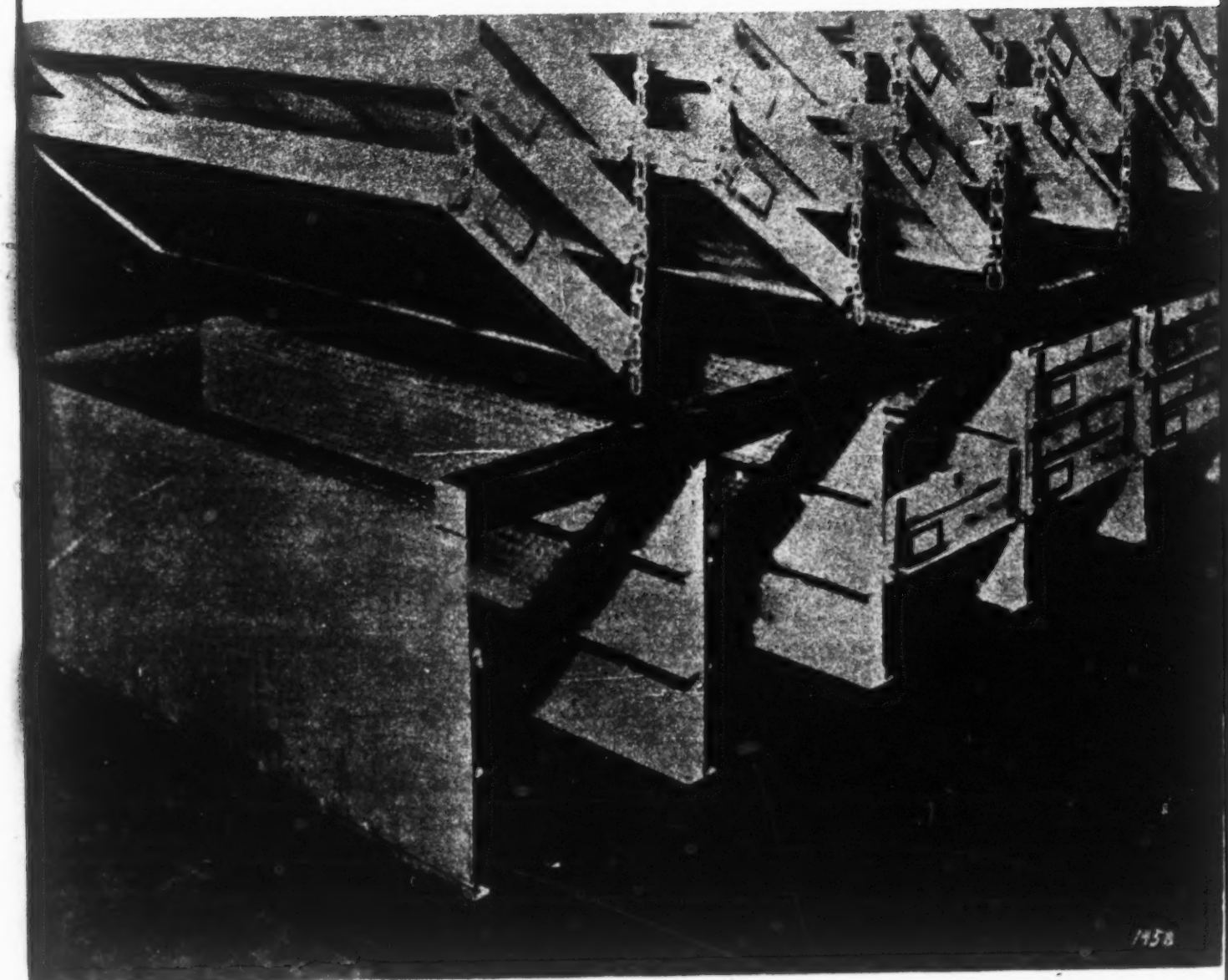

680 Plaintiff's Exhibit.
No. 11 (Catalog)
To Be Treated And Dealt With
Under Provisions Of C. C. A.
Rule 34.

SNOW-INCUBATOR

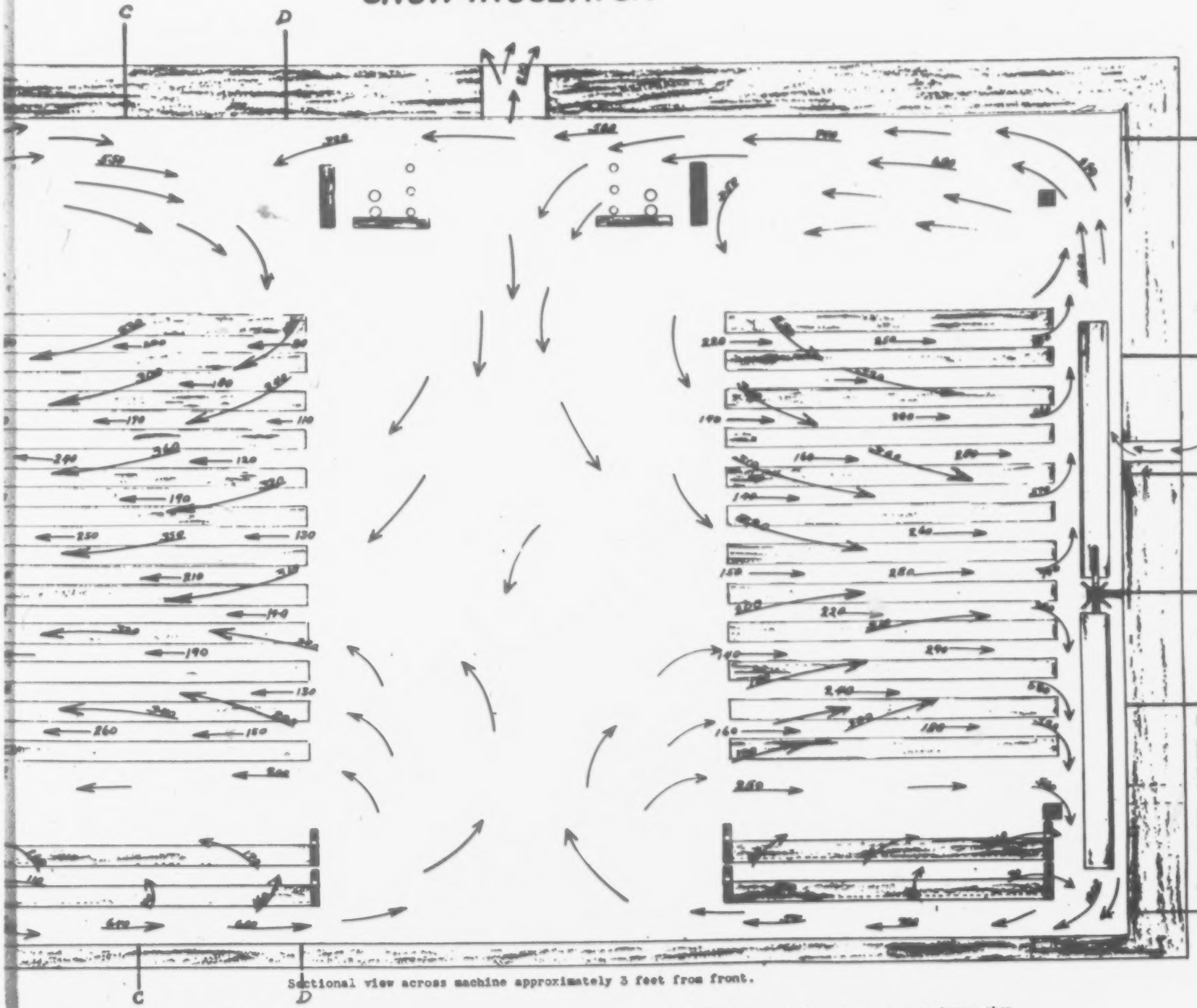

Sectional view across machine approximately 3 feet from front.

Arrows show general direction of air currents. Numbers give approximate speed of currents as recorded by anemometer.

Readings in lower two trays were taken with the anemometers in the trays.

Fans were rotating counter clockwise 208-210

← 200

← 310

Short arrows between upper twelve trays show direction and approximate speed of air currents near center of trays. In these readings, the anemometer was placed in the trays in normal operating position.

Long arrows sweeping across sides of upper twelve trays show currents between tray columns.

Plfs. Ex. 12

SNOW-INCUBATOR

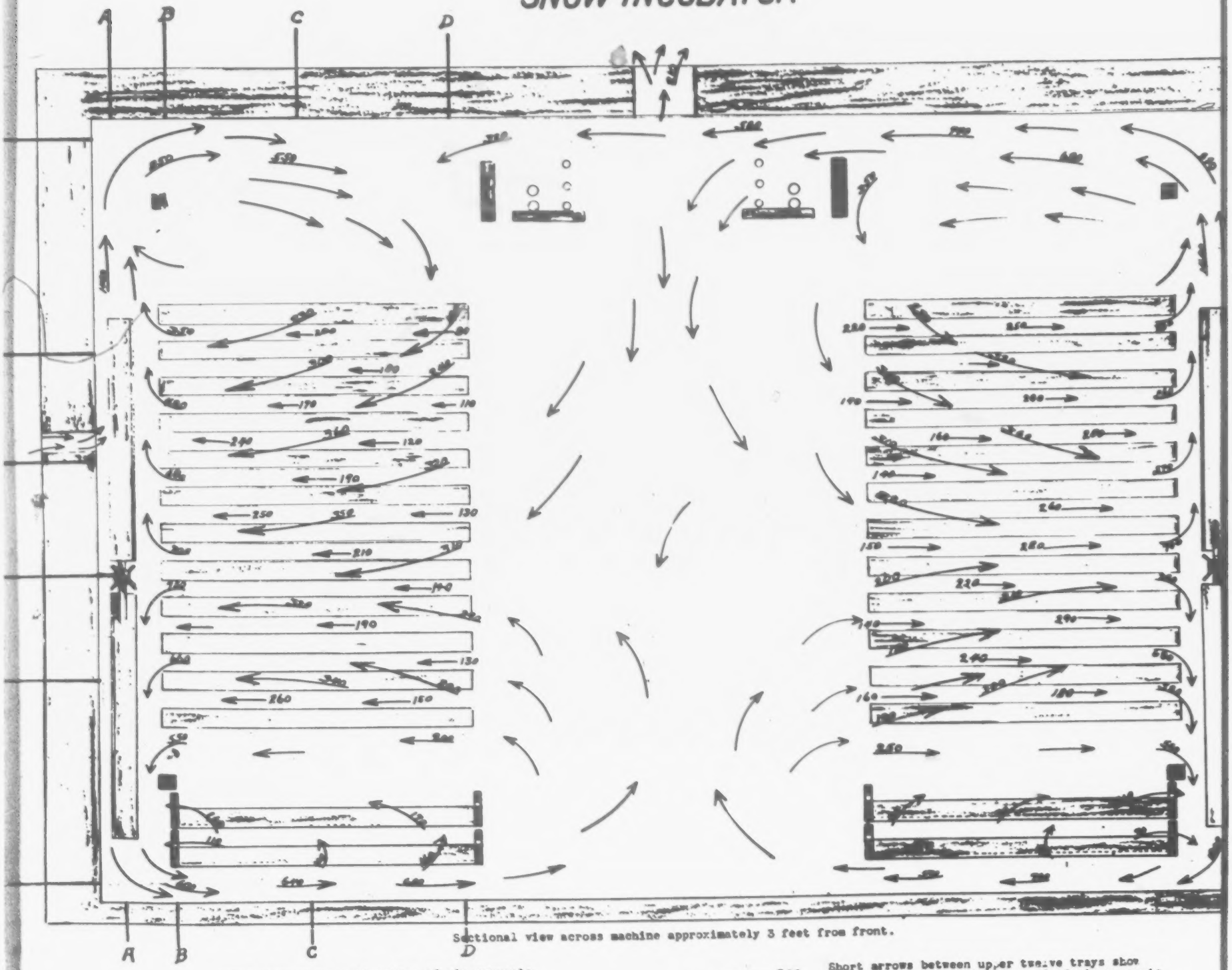

Sectional view across machine approximately 3 feet from front.

Arrows show general direction of air currents. Numbers give approximate speed of currents as recorded by anemometer.

Readings in lower two trays were taken with the anemometers in the trays.

Fans were rotating counter clockwise 200-210 R.P.M.

Short arrows between upper twelve trays show direction and approximate speed of air currents near center of trays. In these readings, the anemometer was placed in the trays in normal operating position.

Long arrows sweeping across sides of upper twelve trays show currents between tray columns.

Plaintiff's Exhibit 12AA

SNOW INCUBATOR

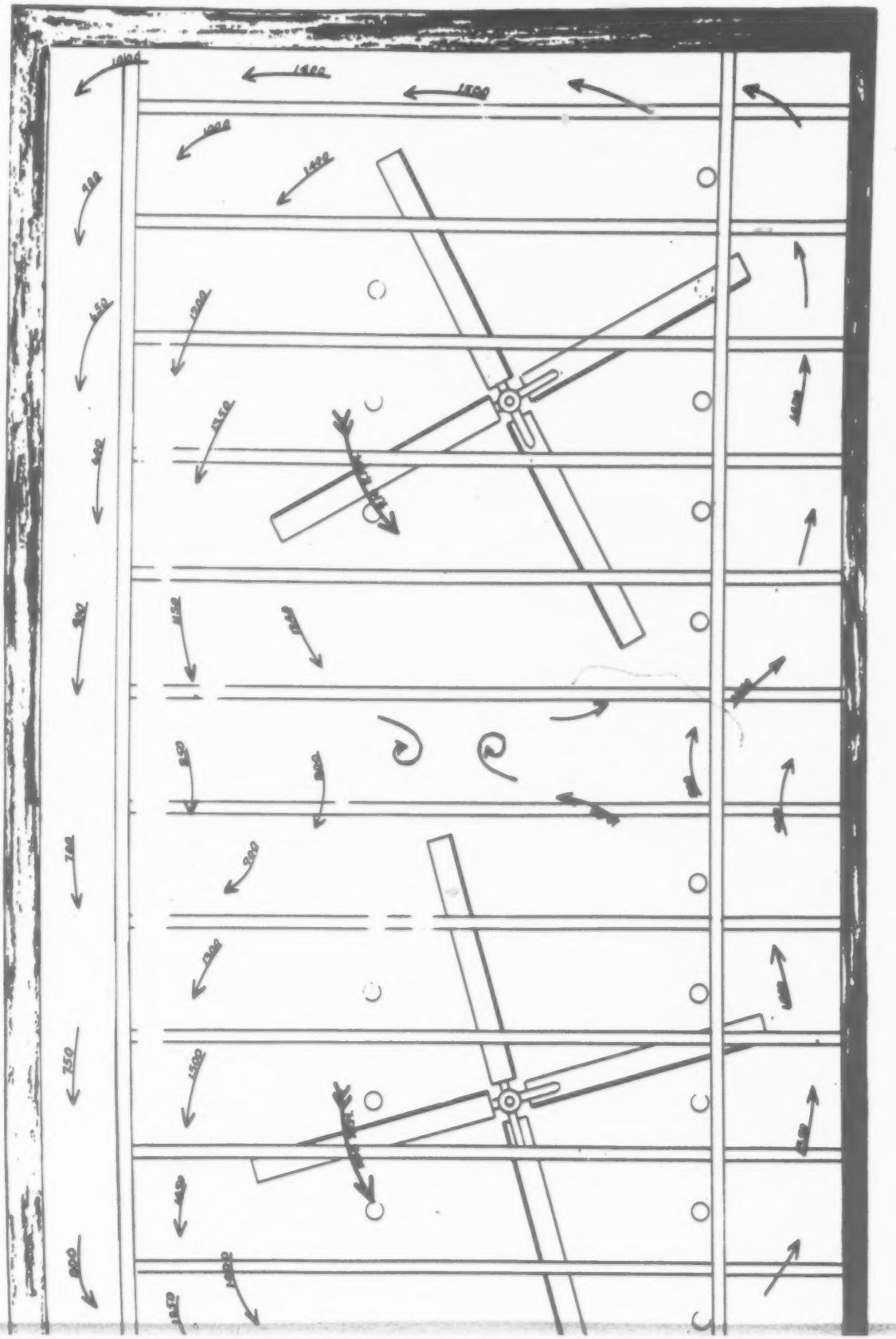

Sectional view in plane of fans. A A

Note: The construction of fans and their direction of rotation would indicate that they should throw the air forward from fan, but they rotate so close to the wall that they cannot feed from behind. As mounted, their speed throws the air off the ends of the blades centrifugally and the air flows into the fans over the entire front surface. Running at 200 to 250 R.P.M. each of these fans moves approximately 6000 cubic feet per minute.

Arrows show direction of air currents on wall of incubator. Figures on arrows show approximate speed of currents as recorded by anemometers.

Large arrows on fans show direction of rotation and revolutions per minute.

SNOW INCUBATOR

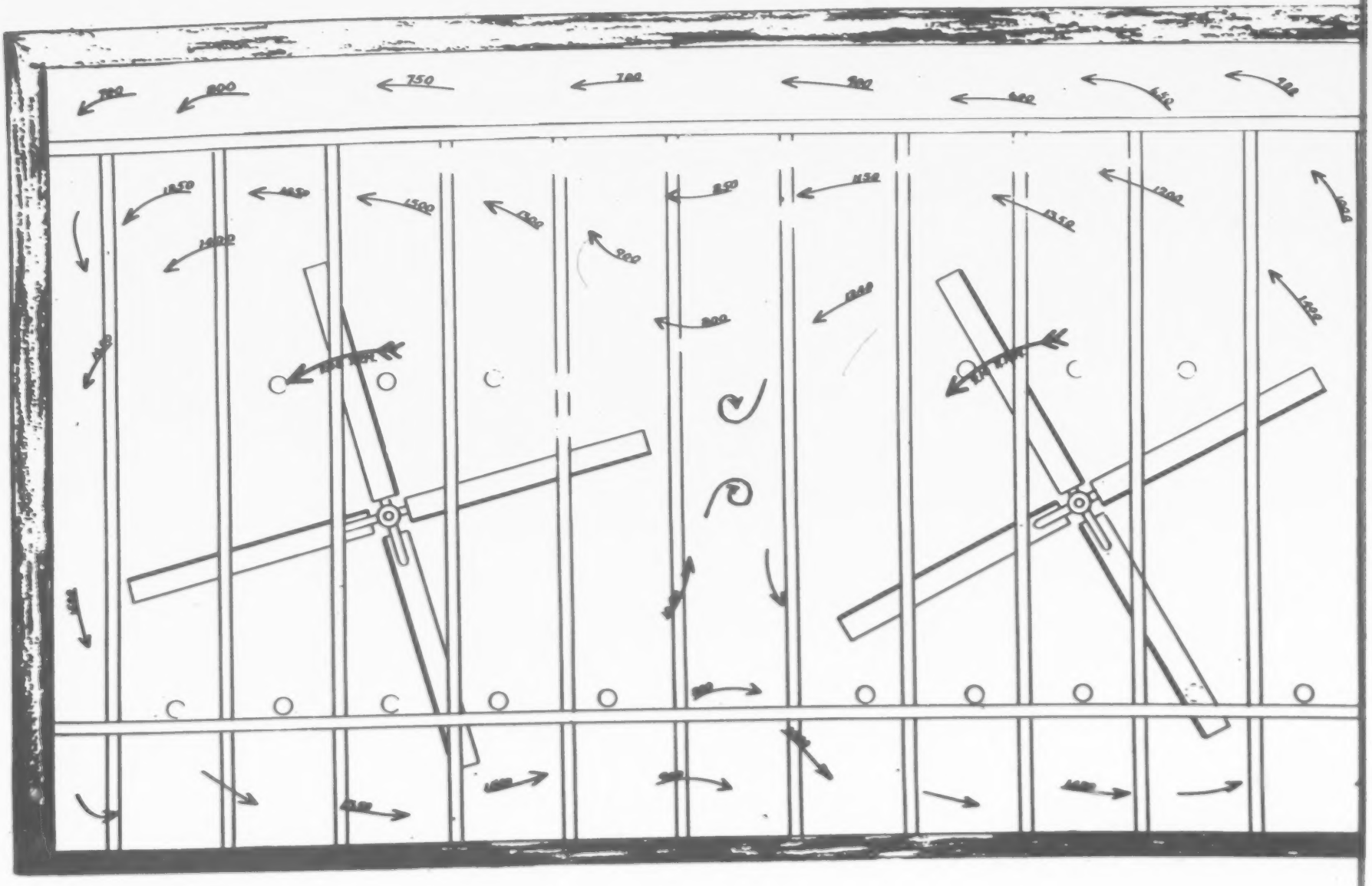

Sectional view in plane of fans. A A

Arrows show direction of air currents on wall of incubator. Figures on arrows show approximate speed of currents as recorded by anemometers.

Large arrows on fans show direction of rotation and revolutions per minute.

Note: The construction of fans and their direction of rotation would indicate that they should throw the air forward from fan, but they rotate so close to the wall that they cannot feed from behind. As mounted, their speed throws the air off the ends of the blades centrifugally and the air flows into the fans over the entire front surface. Running at 800 to 810 R.P.M. each of these fans throws approximately 8000 cubic feet per minute.

SNOW INCUBATOR

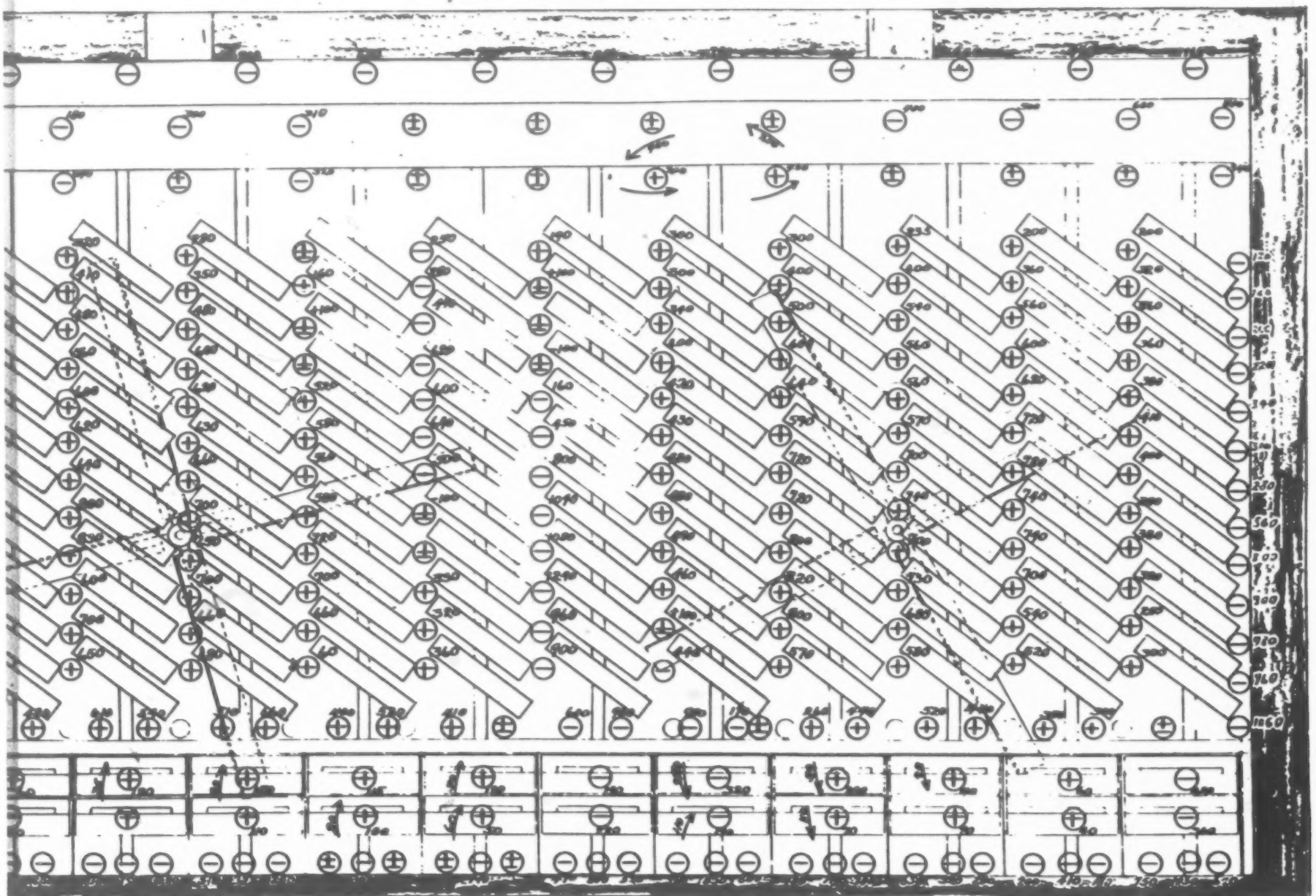

Sectional view in plane parallel to fans and approximately six inches in front of fans. B B

⊕ 100 ⊖ — Shows position of anemometer, direction of air flow, and approximate speed of currents.

⊖ — Air flowing away from fan.

⊕ — Air flowing to the fan.

⊖ 150 — Approximate speed of air current in lineal feet per minute as recorded by anemometer.

⊕ — Anemometer does not run steadily in one direction when placed in this position.

← 100 Arrows show cross current to anemometer. The numbers give their approximate speed.

In this sectional view all readings were taken with the anemometers parallel to the fans with the exception of the twelve readings along the ceiling. These twelve were taken with the anemometer at right angles to the current. Readings at side of turning trays were taken approximately three inches from rear of the trays. Readings in hatching trays were taken four inches from rear of trays. All other readings were taken in the plane of the rear end of trays.

Fans were rotating counter clockwise 208-210 R.P.M.

Plfs. Ex. 12 B B

477

SNOW INCUBATOR

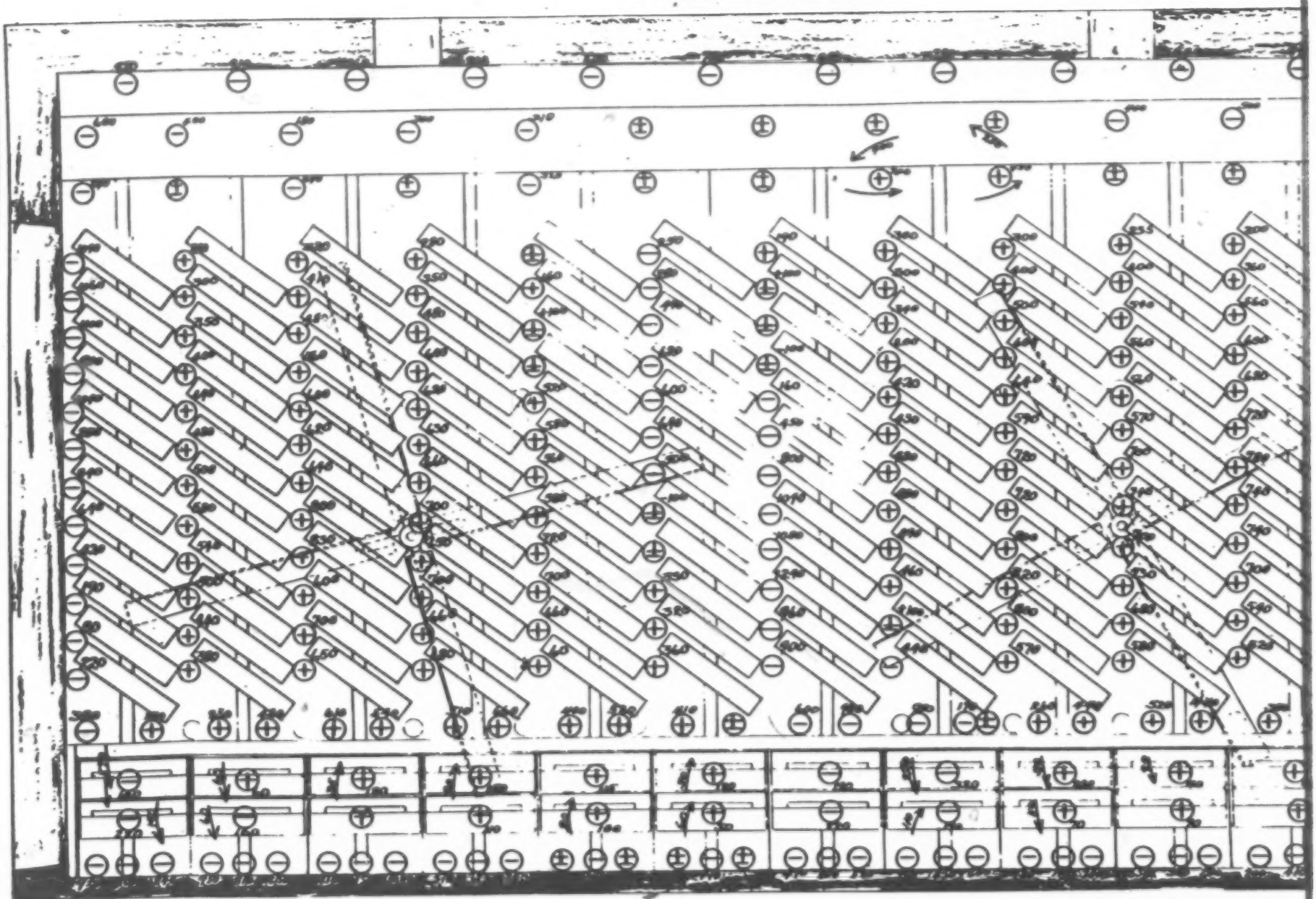

Sectional view in plane parallel to fans and approximately six inches in front of fans. B B

⊕ 100 − Shows position of anemometer, direction of air flow, and approximate speed of currents.

⊖ − Air flowing away from fan.

⊕ − Air flowing to the fan.

⊖ 100 − Approximate speed of air current in lineal feet per minute as recorded by anemometer.

⊕ − Anemometer does not run steadily in one direction when placed in this position.

← 100 Arrows show cross current to anemometer. The numbers give their approximate speed.

In this sectional view all readings were taken with the anemometers parallel to the fans with the exception of the twelve readings along the ceiling. These twelve were taken with the anemometer at right angles to the current. Readings at side of turning trays were taken approximately three inches from rear of the trays. Readings in hatching trays were taken four inches from rear of trays. All other readings were taken in the plane of the rear end of trays.

Fans were rotating counter clockwise 206-210 R.P.M.

SNOW INCUBATOR

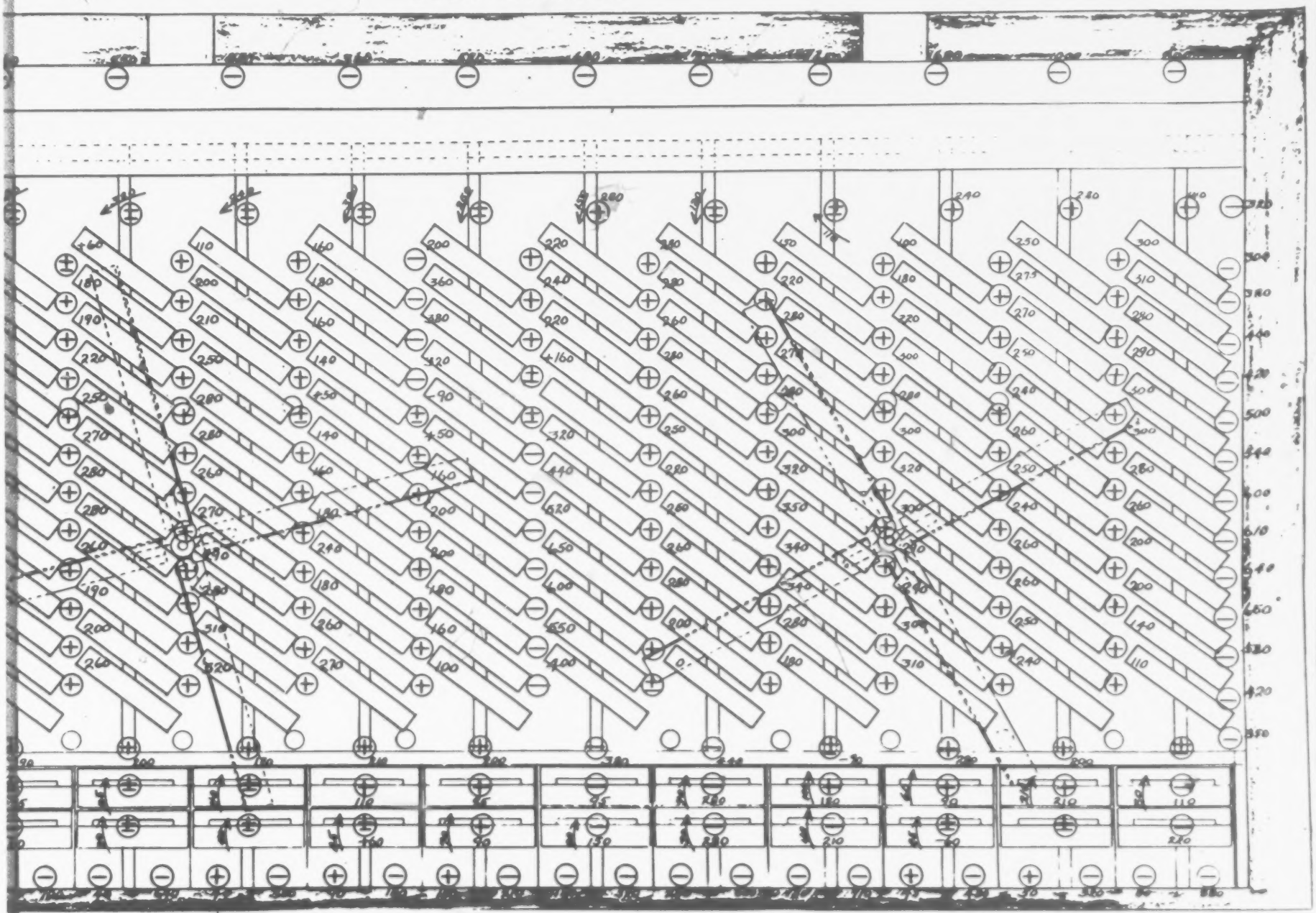

Sectional view in plane parallel to fans and midway between front and rear of the trays. C C

⊕ 100 – Shows position of anemometer, direction of air flow, and approximate speed of air currents.

⊖ – Air flowing away from fan.

⊕ – Air flowing to the fan.

⊖ 100 – Approximate speed of air current in lineal feet per minute as recorded by anemometer.

⊕ – Anemometer does not run steadily in one direction

← 100 Arrows show cross current to anemometer. The numbers give their approximate speed.

In this sectional view all readings were taken midway between the front and rear of the trays and with the anemometer parallel to the fans with the exception of the twelve along the ceiling. These twelve were taken with the anemometer at right angles to the current.

Fans were rotating counter clockwise 208-210 R.P.M.

Plfs. Ex. 12CC

479

SNOW INCUBATOR

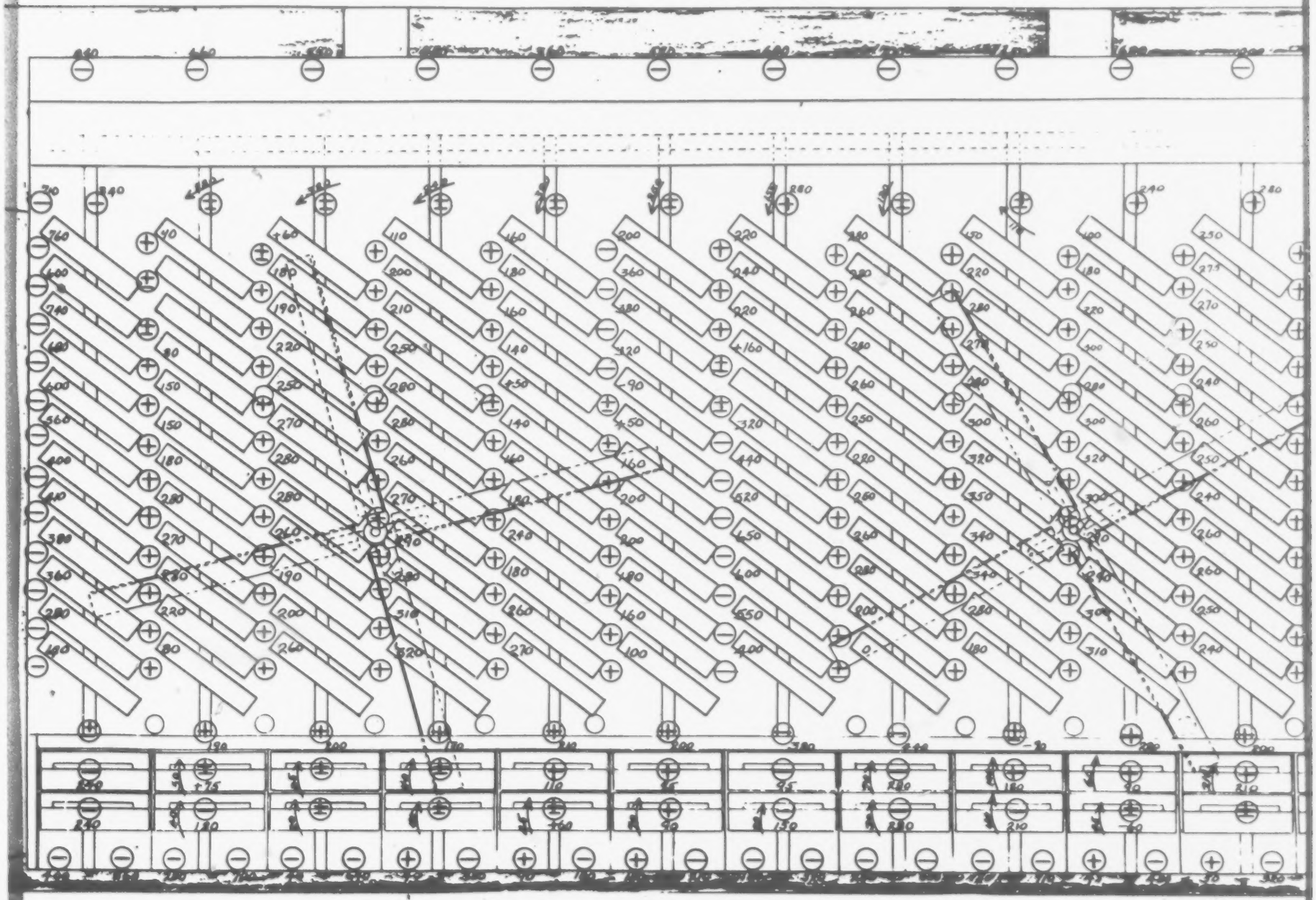

Sectional view in plane parallel to fans and midway between front and rear of the trays. C C

⊕ 100 – Shows position of anemometer, direction of air flow, and approximate speed of air currents.

⊖ – Air flowing away from fan.

⊕ – Air flowing to the fan.

⊖ 100 – Approximate speed of air current in lineal feet per minute as recorded by anemometer.

⊕ – Anemometer does not run steadily in one direction when placed in this position.

← 100 Arrows show cross current to anemometer. The numbers give their approximate speed.

In this sectional view all readings were taken midway between the front and rear of the trays and with the anemometer parallel to the fans with the exception of the twelve along the ceiling. These twelve were taken with the anemometer at right angles to the current.

Fans were rotating counter clockwise 208-210 R.P.M.

SNOW INCUBATOR

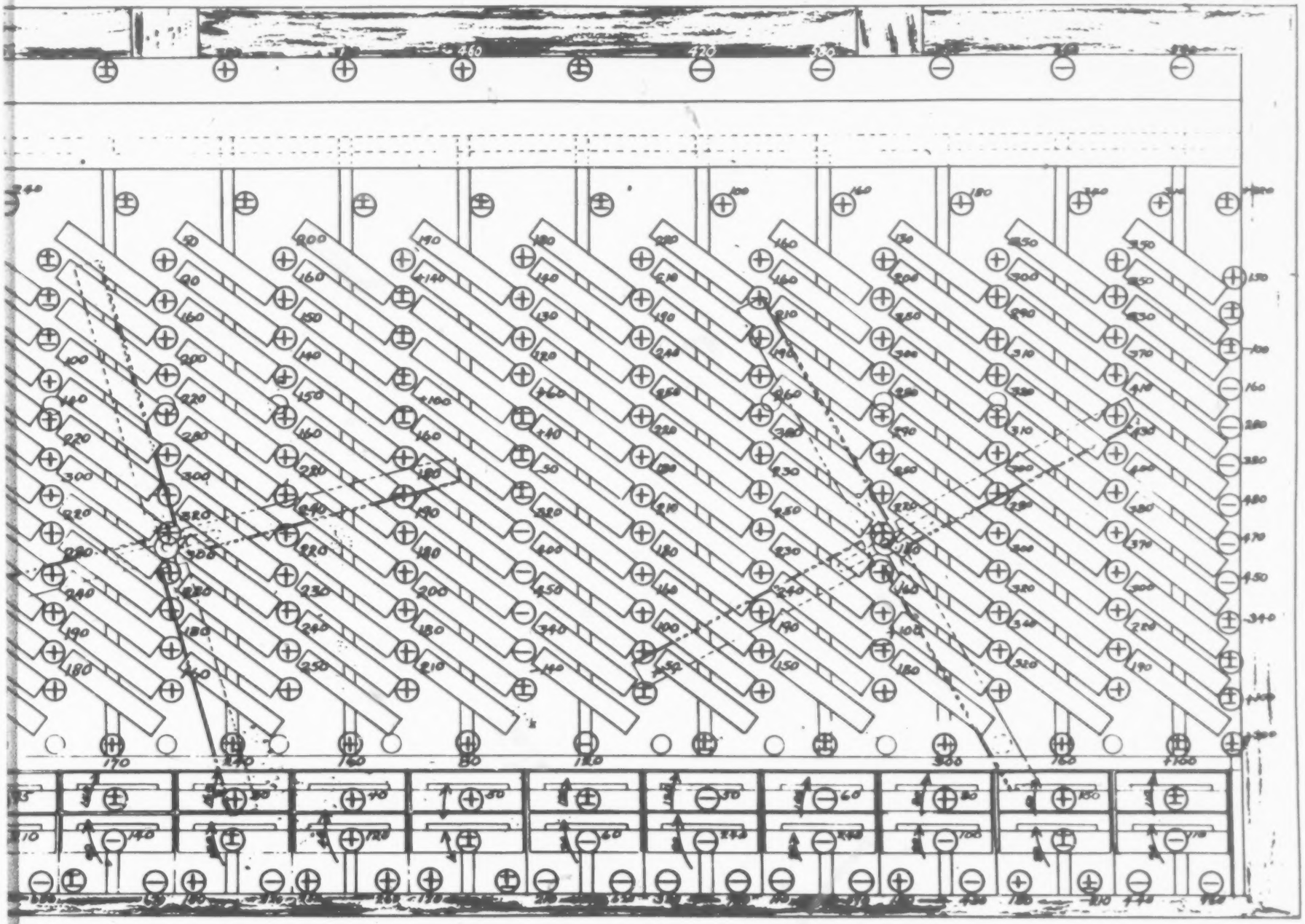

Sectional view in plane parallel to fans and near front of trays. D D

⊕ 100 — Shows position of anemometer, direction of air flow, and approximate speed of air currents.

⊖ — Air flowing away from fan.

⊕ — Air flowing to the fan.

⊖ 100 — Approximate speed of air current in lineal feet per minute as recorded by anemometer.

⊕ — Anemometer does not run steadily in one direction

← 120 Arrows show cross current to anemometer. The numbers give their approximate speed.

In this sectional view all readings were taken with the anemometer parallel to the fans. Readings at the side of the turning trays were taken approximately three inches from front of trays. Readings in the hatching racks were taken four inches from front of trays. All other readings were taken in the plan of the front of the trays.

Fans were rotating counter clockwise 208-210 R.P.M.

Plfs. Ex. 12DD

481

SNOW INCUBATOR

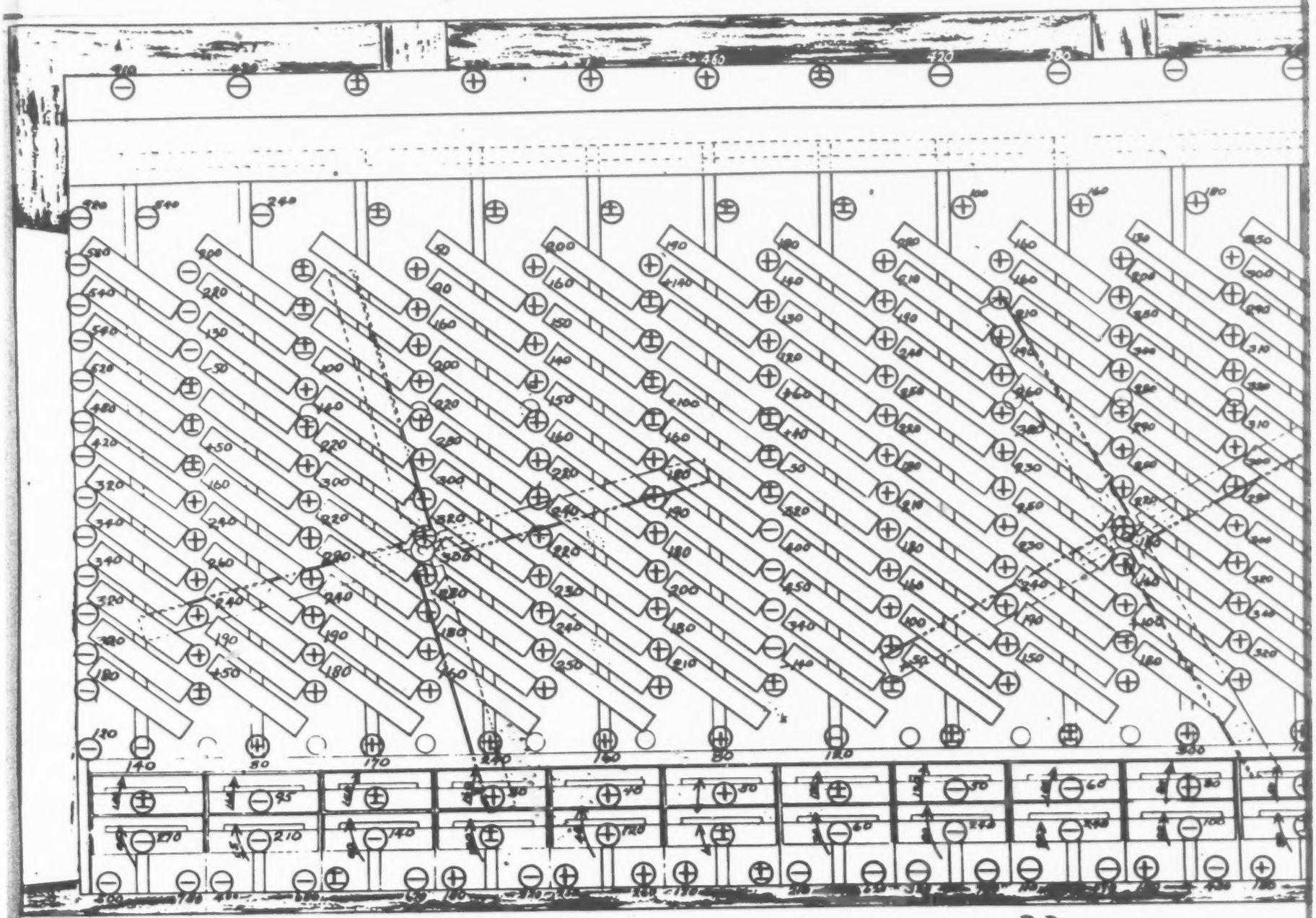

Sectional view in plane parallel to fans and near front of trays. D D

⊕ 100 — Shows position of anemometer, direction of air flow, and approximate speed of air currents.

⊖ — Air flowing away from fan.

⊕ — Air flowing to the fan.

⊖ 100 — Approximate speed of air current in lineal feet per minute as recorded by anemometer.

⊕ — Anemometer does not run steadily in one direction when placed in this position.

← 120 Arrows show cross current to anemometer. The numbers give their approximate speed.

In this sectional view all readings were taken with the anemometer parallel to the fans. Readings at the side of the turning trays were taken approximately three inches from front of trays. Readings in the hatching racks were taken four inches from front of trays. All other readings were taken in the plan of the front of the trays.

Fans were rotating counter clockwise 208-210 R.P.M.

SNOW-INCUBATOR

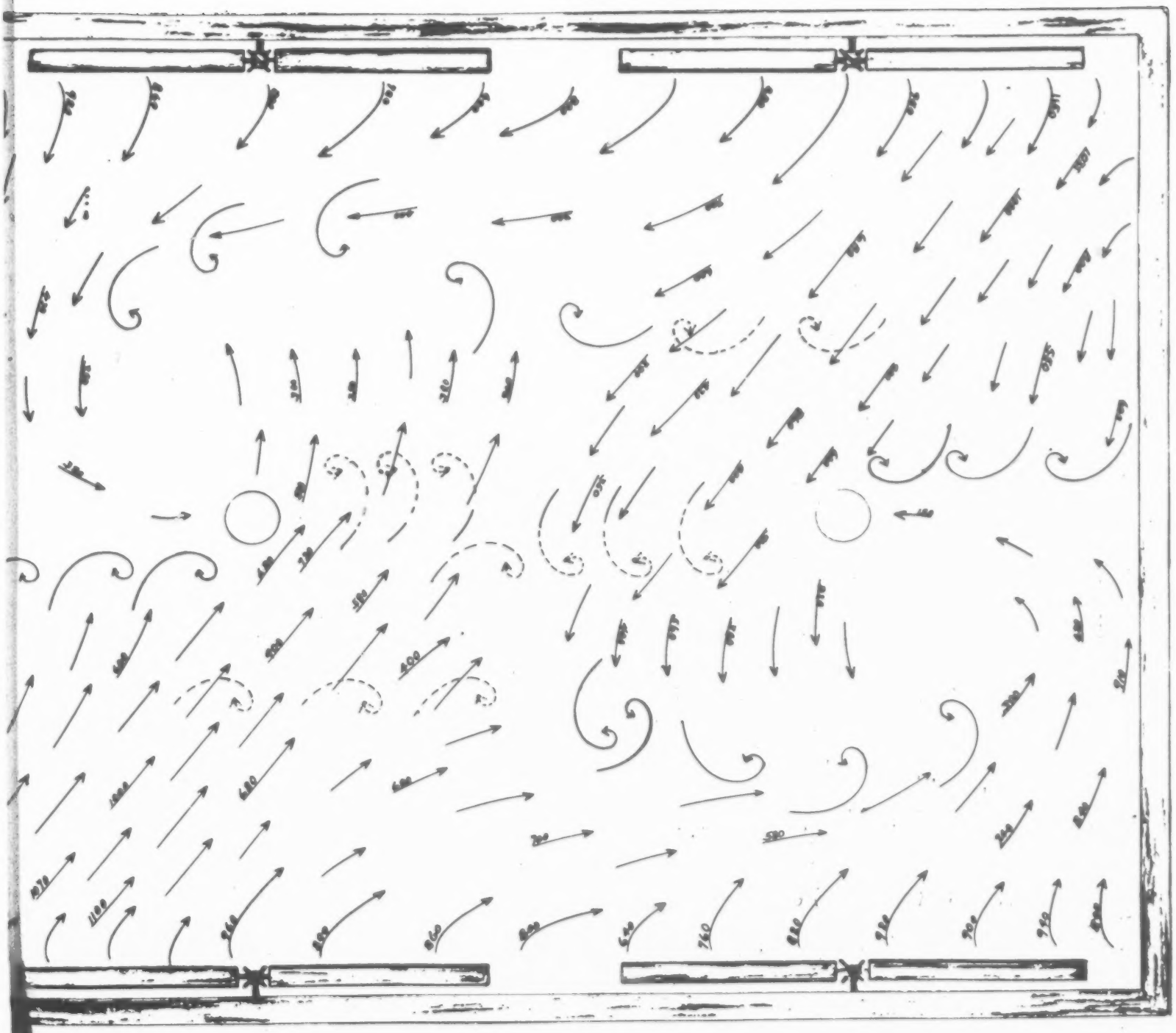

Diagram of air currents along roof of incubator as if viewed from above through roof. EE

EE

Plaintiff's Exhibit 12 EE

SNOW-INCUBATOR

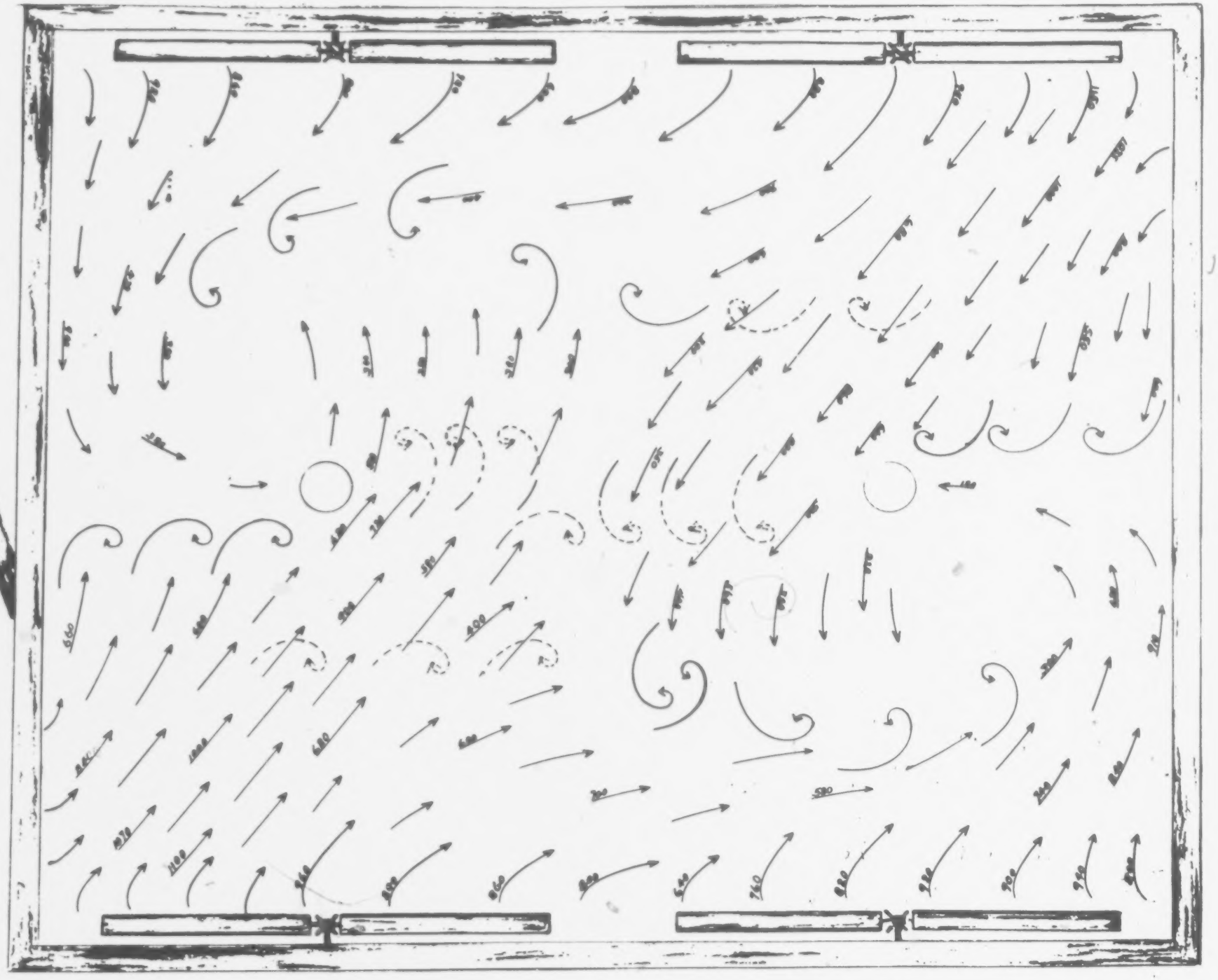

Diagram of air currents along roof of incubator as if viewed from above through roof. E E

SNOW-INCUBATOR

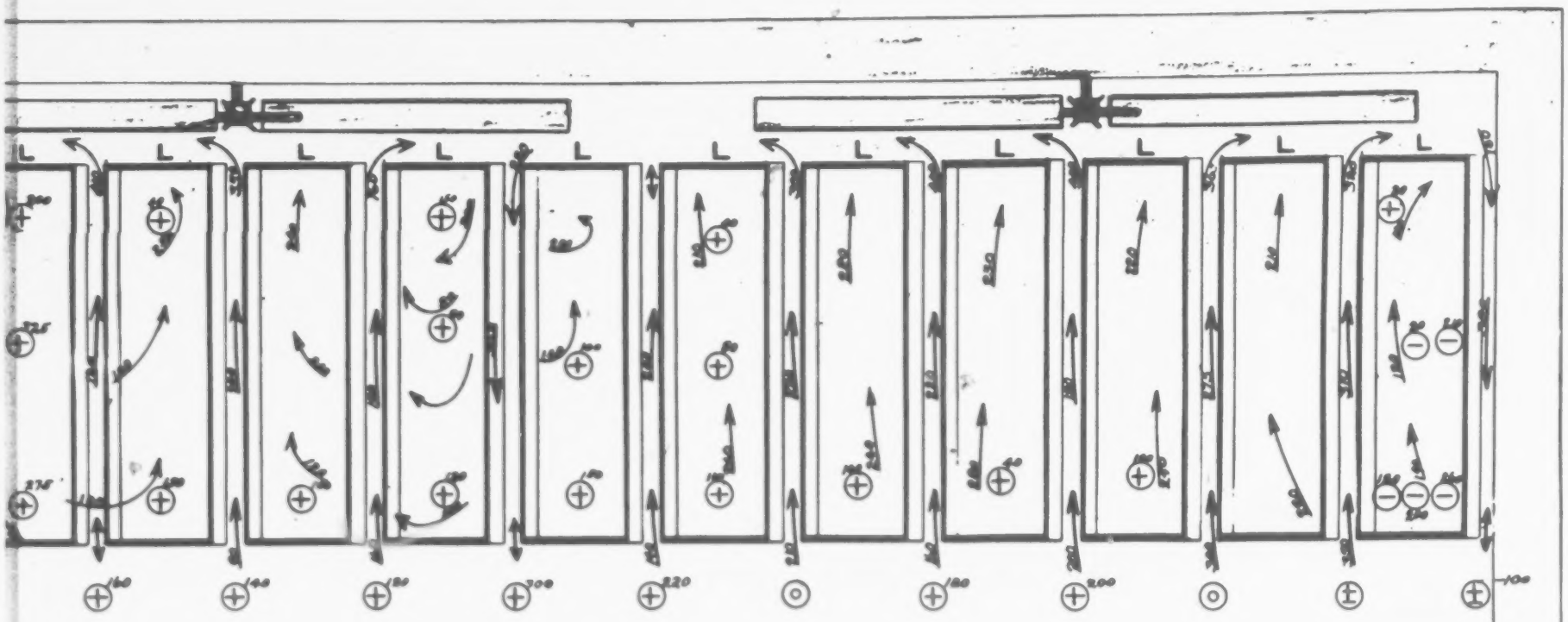

Horizontal section on left side of incubator in plane of 2nd tray from top. F F

⊕ 100 – Circles in trays give position and reading of anemometers when placed flat on bottom of tray.

⊕ – Plus reading indicates air moving downward through bottom of tray.

⊖ – Minus means air moves upward.

⊕ – Plus or minus indicates anemometer does not run steadily in one direction when in this position.

⊙ – Zero means no movement.

A – Anemometer readings shown in this line were taken between tray columns at edge of corridor, making anemometer parallel to floor of incubator.

While collecting data for this diagram, trays were turned approximately 45 degrees from horizontal with left side dorn or with trays opposite to position shown in "Sectional view in plane of fans".

Readings between trays were taken with anemometers parallel to fans.

Arrows in trays show general direction and approximate speed of air currents passing through tray columns.

Fans were rotating counter clockwise 206-210 R. P. M.

Plfs. Ex. 12FF

SNOW-INCUBATOR

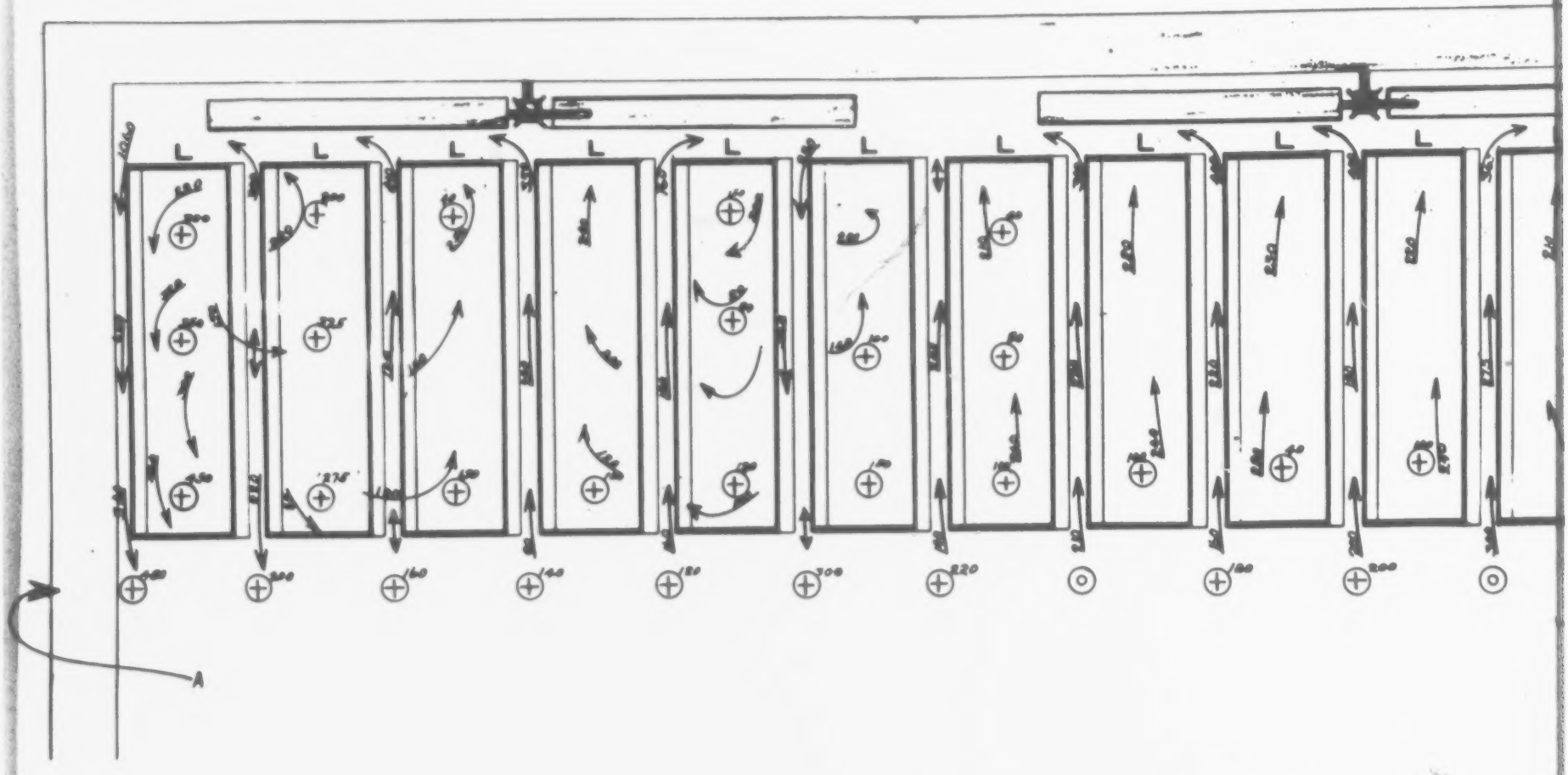

Horizontal section on left side of incubator in plane of 2nd tray from top. F F

⊕ 100 − Circles in trays give position and reading of anemometers when placed flat on bottom of tray.

⊕ − Plus reading indicates air moving downward through bottom of tray.

⊖ − Minus means air moves upward.

⊕⊖ − Plus or minus indicates anemometer does not run steadily in one direction when in this position.

⊙ − Zero means no movement.

A − Anemometer readings shown in this line were taken between tray columns at edge of corridor, holding anemometer parallel to floor of incubator.

While collecting data for this diagram, trays were turned approximately 45 degrees from horizontal with left side down or with trays opposite to position shown in "Sectional view in plane of fans".

Readings between trays were taken with anemometers parallel to fans.

Arrows in trays show general direction and approximate speed of air currents passing through tray columns.

Fans were rotating counter clockwise 206-210 R. P. M.

SNOW-INCUBATOR

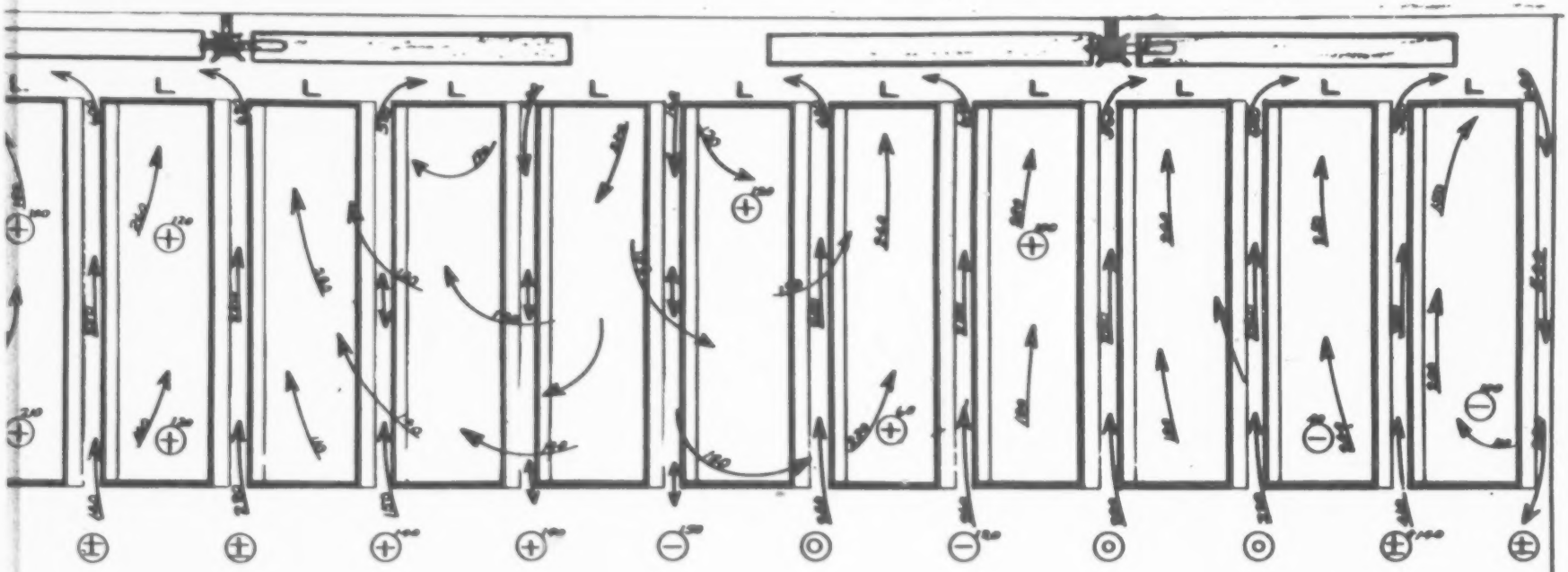

Horizontal section on left side of incubator in plane of 5th tray from top. G G

⊕ 100 – Circles in trays give position of reading of anemometers when placed flat on bottom of tray.

⊕ – Plus reading indicates air moving downward through bottom of tray.

⊖ – Minus means air moves upward.

⊕ – Plus or minus indicates anemometer does not run steadily in one direction when in this position.

◎ – Zero means no movement.

A – Anemometer readings shown in this line were taken between trays columns at edge of corridor, holding anemometer parallel to floor of incubator.

While collecting data for this diagram, trays were turned approximately 45 degrees from horizontal with left side down or with trays opposite to position shown in "Sectional view in plane of fans".

Readings between trays were taken with anemometers parallel to fans.

Arrows in trays show general direction and approximate speed of air currents passing through tray columns.

Fans were rotating counter clockwise 830-840 R. P. M.

Pfs. Ex. 12 GG

487

SNOW-INCUBATOR

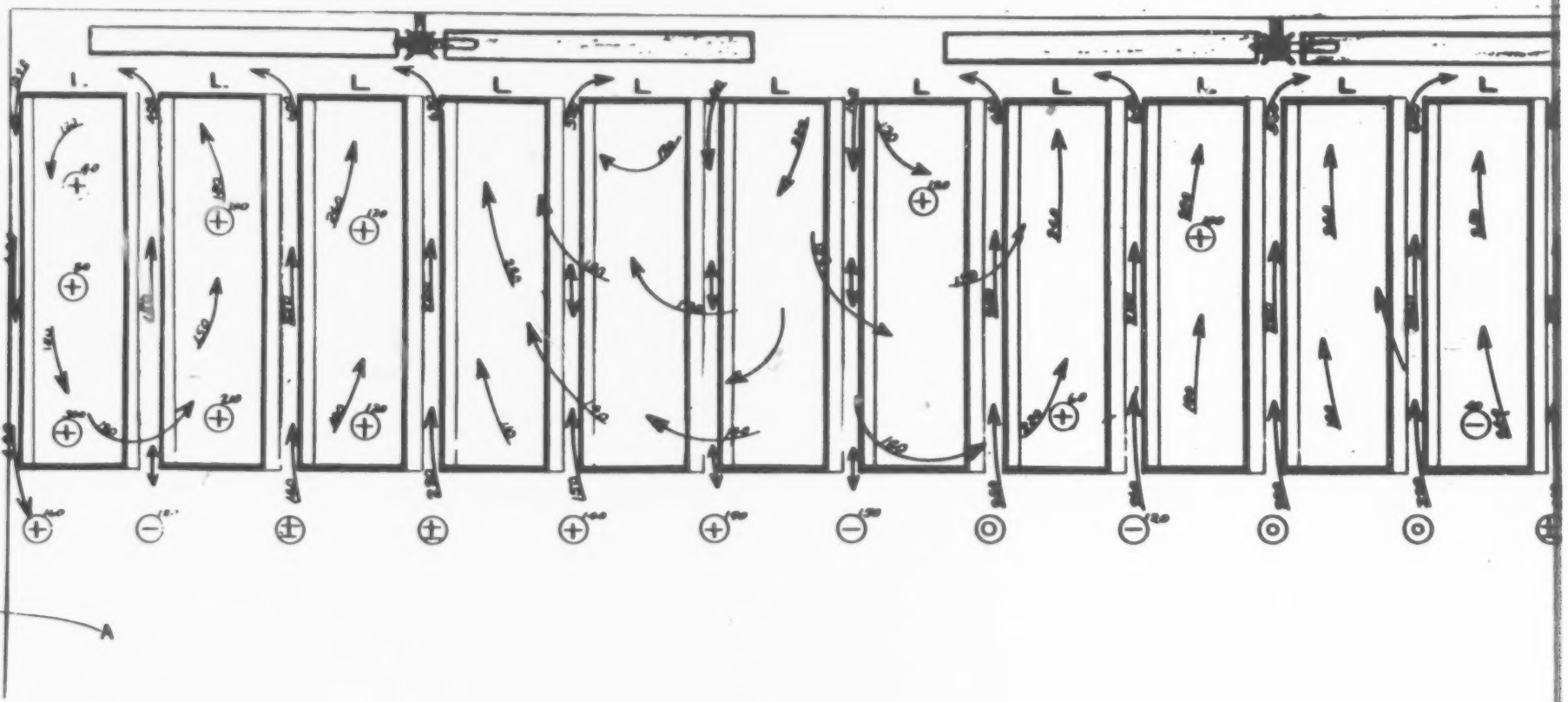

Horizontal section on left side of incubator in plane of 5th tray from top. 4 6

⊕ 100 –	Circles in trays give position of reading of anemometers when placed flat on bottom of tray.
⊕ –	Plus reading indicates air moving downward through bottom of tray.
⊖ –	Minus means air moves upward.
± –	Plus or minus indicates anemometer does not run steadily in one direction when in this position.
⊙ –	Zero means no movement.
A –	Anemometer readings shown in this line were taken between trays columns at edge of corridor, holding anemometer parallel to floor of incubator.

While collecting data for this diagram, trays were turned approximately 45 degrees from horizontal with left side down or with trays opposite to position shown in "Sectional view in plane of fans".

Readings between trays were taken with anemometers parallel to fans.

Arrows in trays show general direction and approximate speed of air currents passing through tray columns.

Fans were rotating counter clockwise 208-210 R. P. M.

SNOW-INCUBATOR

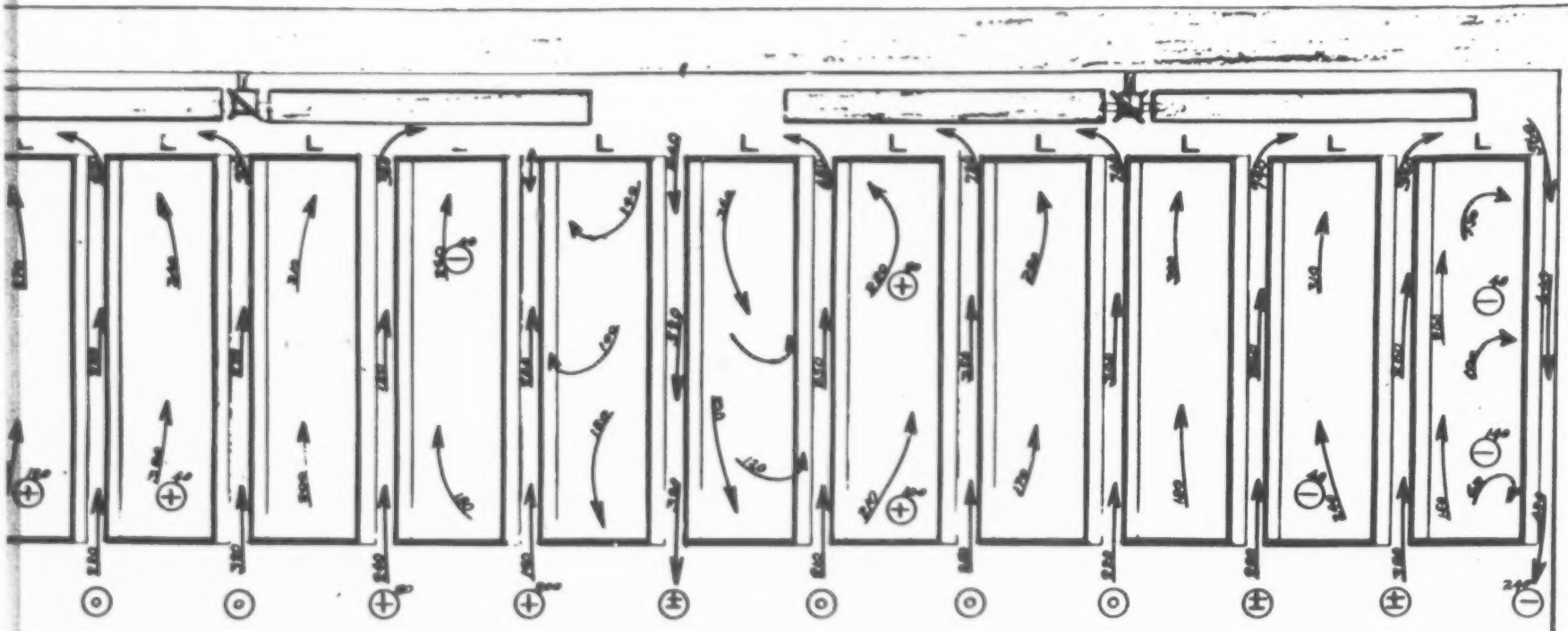

Horizontal section on left side of incubator in plane of 8th tray from top. H H

⊕ 100. ⊖ – Circles in trays give position and reading of anemometers when placed flat on bottom of tray.

⊕ – Plus reading indicates air moving downward through bottom of tray.

⊖ – Minus means air moves upward.

⊜ – Plus or minus indicates anemometer does not run steadily in one direction when in this position.

⊙ – Zero means no movement.

A – Anemometer readings shown in this line were taken between tray columns at edge of corridor, holding anemometer parallel to floor of incubator.

While collecting data for this diagram, trays were turned approximately 45 degrees from horizontal with left side down or with trays opposite to position shown in "Sectional view in plane of fans".

Readings between trays were taken with anemometers parallel to fans.

Arrows in trays show general direction and approximate speed of air currents passing through tray columns.

Fans were rotating counter clockwise 208-210 R. P. M.

Pfs. Ex. 12 HH

489

SNOW-INCUBATOR

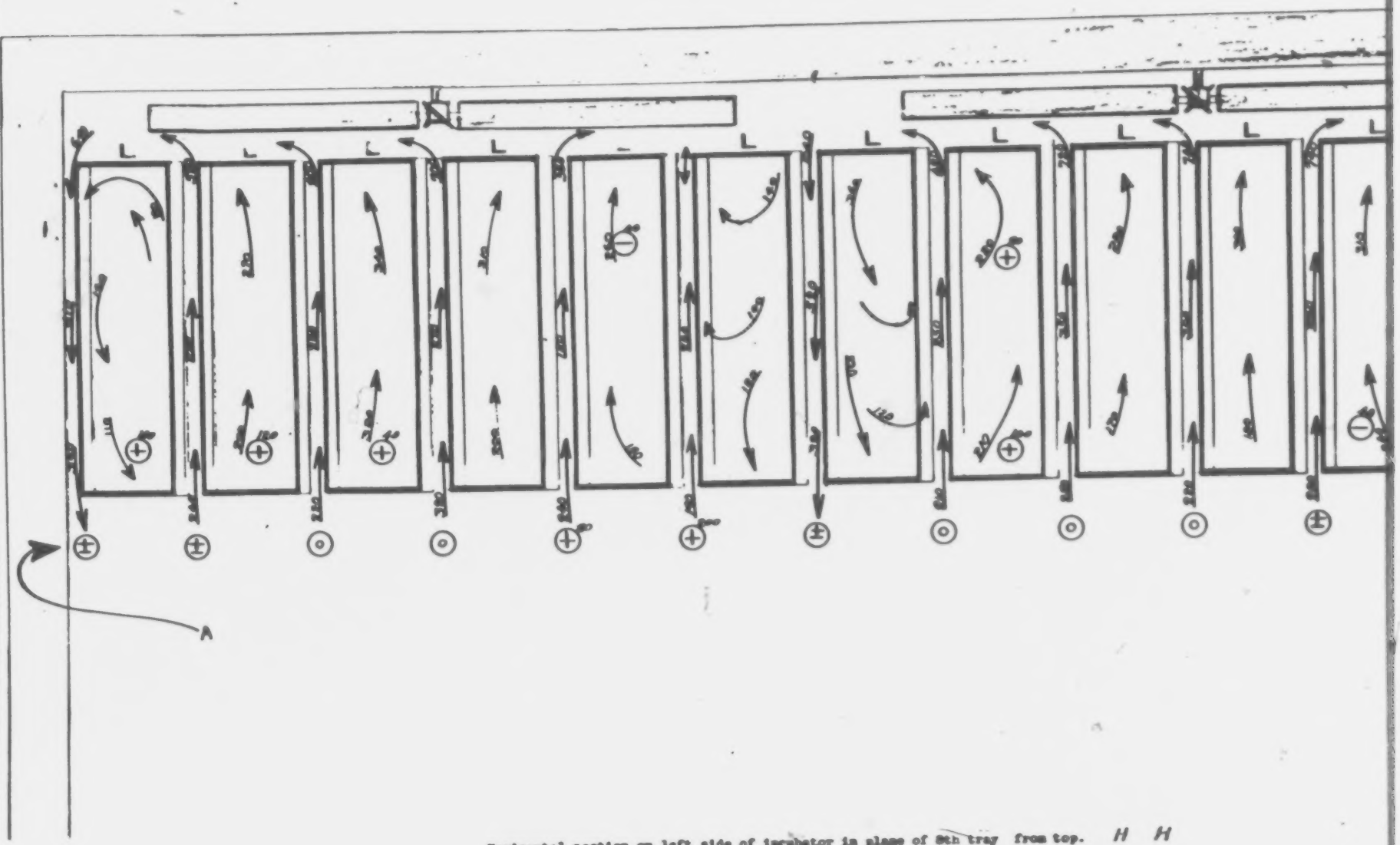

Horizontal section on left side of incubator in plane of 8th tray from top. H H

⊕ 100 – Circles in trays give position and reading of anemometers when placed flat on bottom of tray.

⊕ – Plus reading indicates air moving downward through bottom of tray.

⊖ – Minus means air moves upward.

⊛ – Plus or minus indicates anemometer does not run steadily in one direction when in this position.

⊙ – Zero means no movement.

A – Anemometer readings shown in this line were taken between tray columns at edge of corridor, holding anemometer parallel to floor of incubator.

While collecting data for this diagram, trays were turned approximately 45 degrees from horizontal with left side down or with trays opposite to position shown in "Sectional view in plane of fans".

Readings between trays were taken with anemometers parallel to fans.

Arrows in trays show general direction and approximate speed of air currents passing through tray columns.

Fans were rotating counter clockwise 208-210 R. P. M.

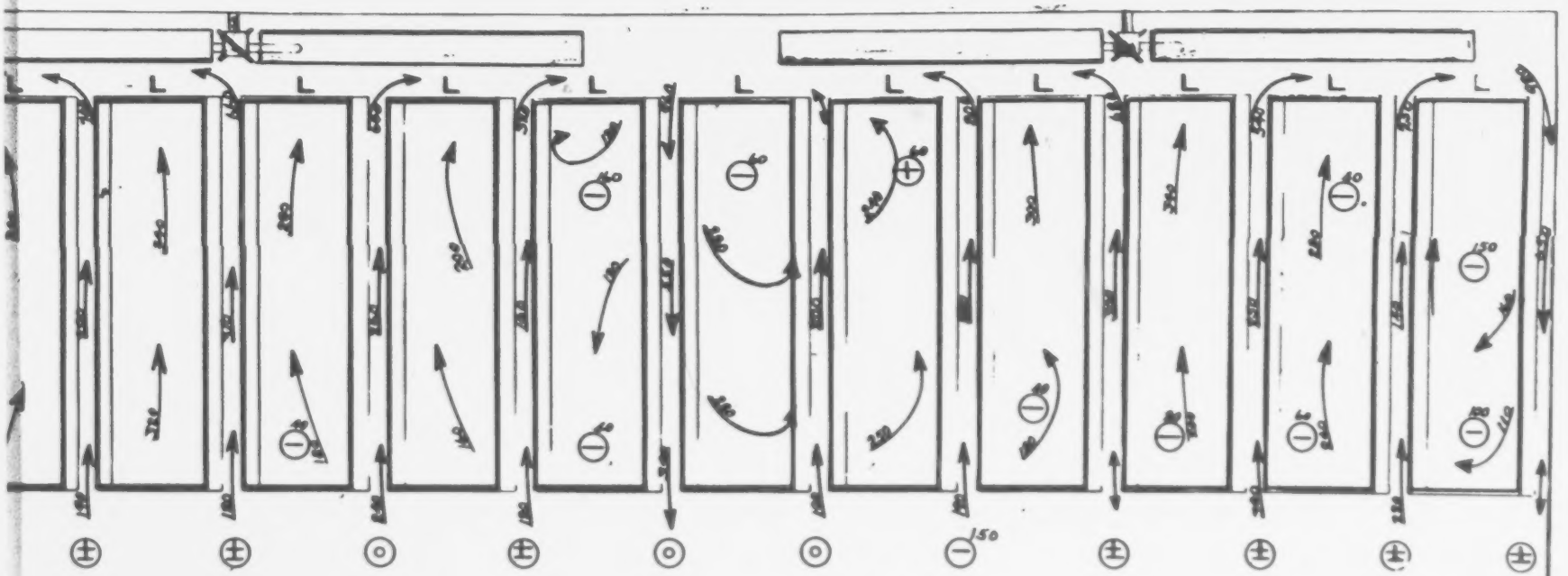

Horizontal section on left side of incubator in plane of 11th tray from top. J J

⊕ 100 ⊖ – Circles in trays give position and reading of anemometers when placed flat on bottom of tray.

⊕ – Plus reading indicates air moving downward through bottom of tray.

⊖ – Minus means air moves upward.

⊜ – Plus or minus indicates anemometer does not run steadily in one direction when in this position.

⊙ – Zero means no movement.

A – Anemometer readings shown in this line were taken between tray columns at edge of corridor, holding anemometer parallel to floor of incubator.

While collecting data for this diagram, trays were turned approximately 45 degrees from horizontal with left side down or with trays opposite to position shown in "Sectional view in plane of fans".

Readings between trays were taken with anemometers parallel to fans.

Arrows in trays show general direction and approximate speed of air currents passing through tray columns.

Fans were rotating counter clockwise 208-210 R. P. M.

Plfs. Ex. 12 JJ

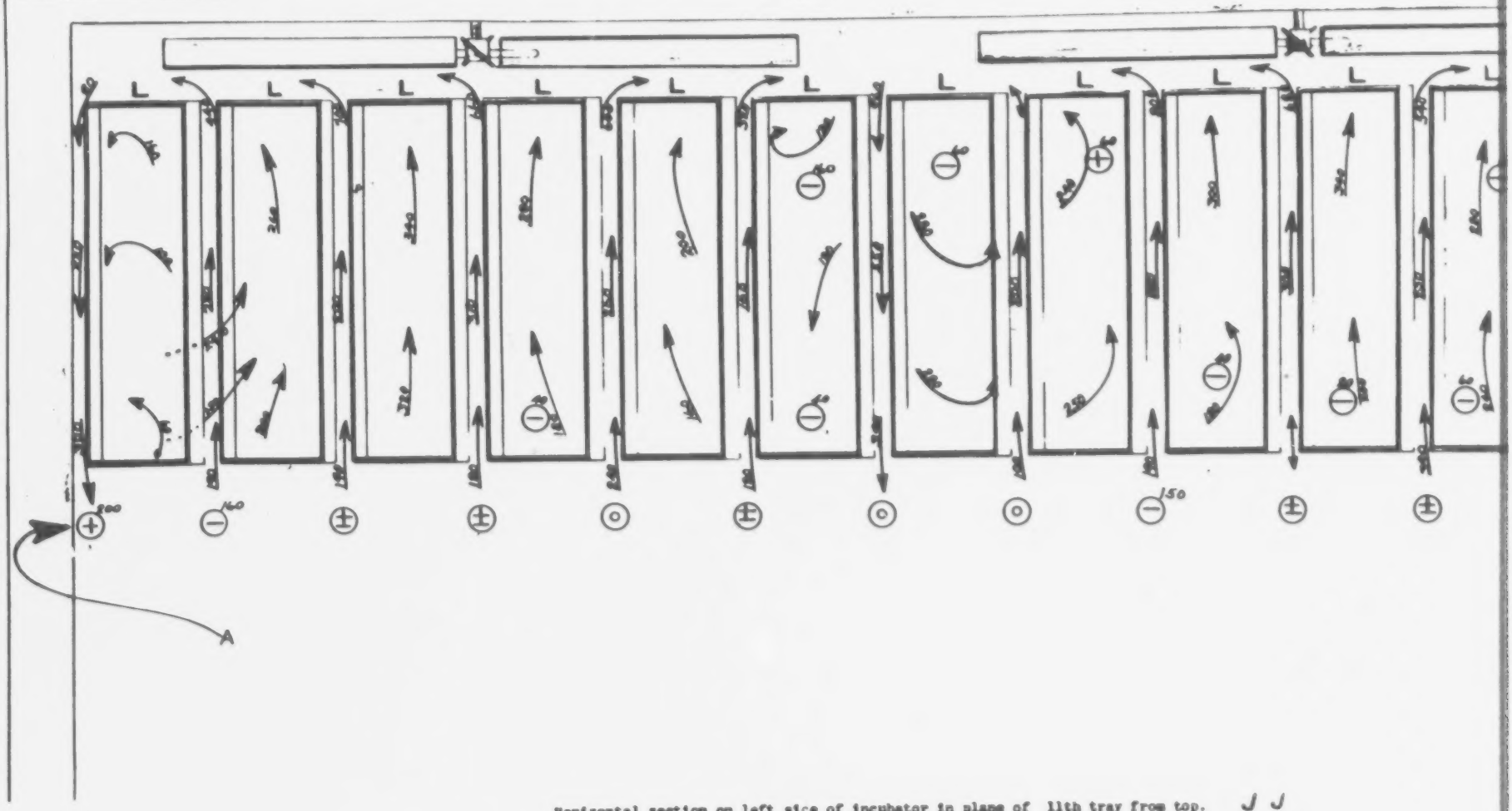

Horizontal section on left side of incubator in plane of 11th tray from top. J J

⊕ 100 – Circles in trays give position and reading of anemometers when placed flat on bottom of tray.

⊕ – Plus reading indicates air moving downward through bottom of tray.

⊖ – Minus means air moves upward.

⊕⊖ – Plus or minus indicates anemometer does not run steadily in one direction when in this position.

⊙ – Zero means no movement.

A – Anemometer readings shown in this line were taken between tray columns at edge of corridor, holding anemometer parallel to floor of incubator.

While collecting data for this diagram, trays were turned approximately 45 degrees from horizontal with left side down or with trays opposite to position shown in "Sectional view in plane of fans".

Readings between trays were taken with anemometers parallel to fans.

Arrows in trays show general direction and approximate speed of air currents passing through tray columns.

Fans were rotating counter clockwise 206-210 R. P. M.

SNOW-INCUBATOR

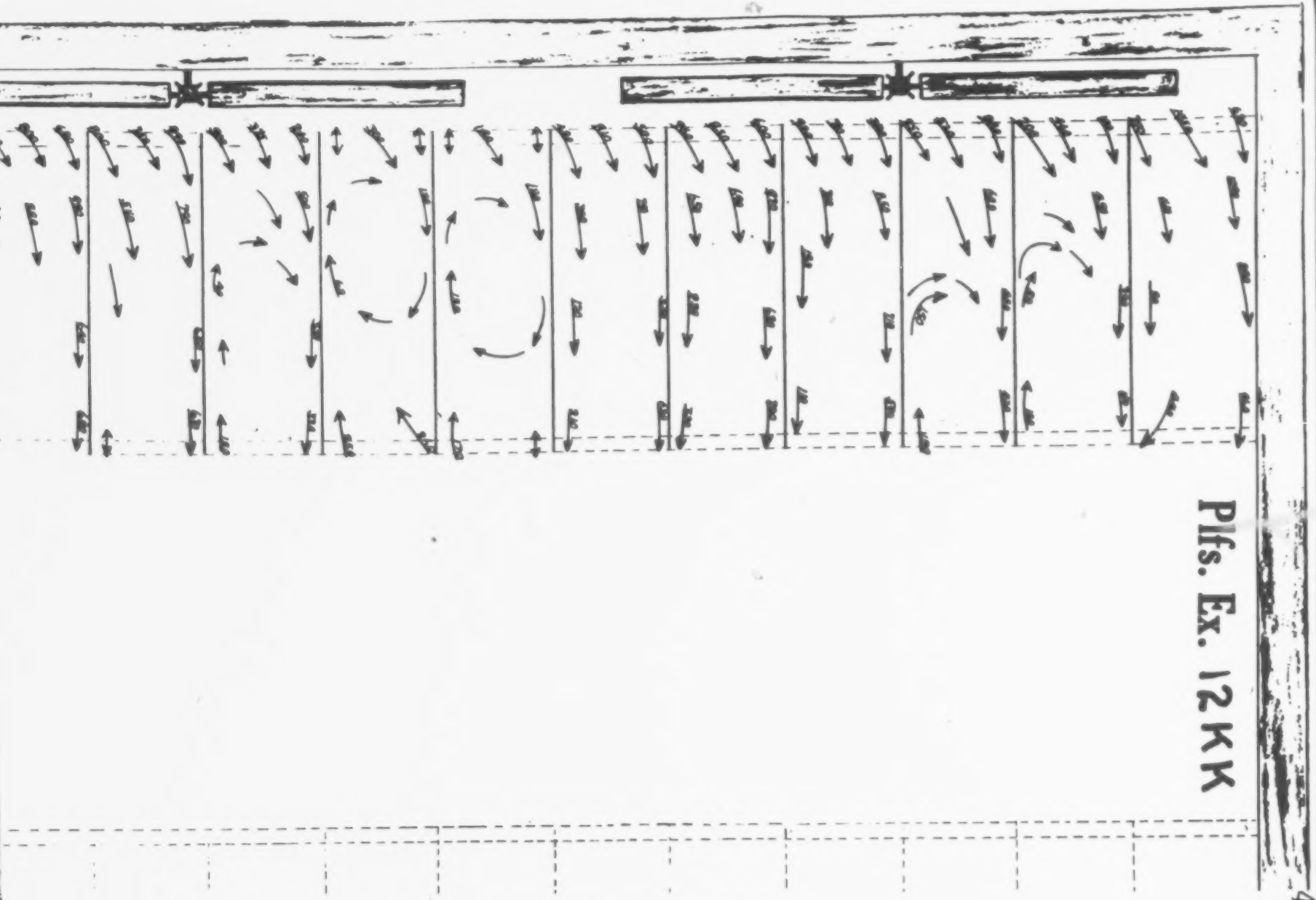

Pfs. Ex. 12 K K

Diagram of air currents on floor of incubator below bottom tray. K K

Arrows show general direction of air currents.
Numbers give approximate speed of currents as recorded by anemometer.

Fans were rotating counter clockwise 208-210 R.P.M.

SNOW-INCUBATOR

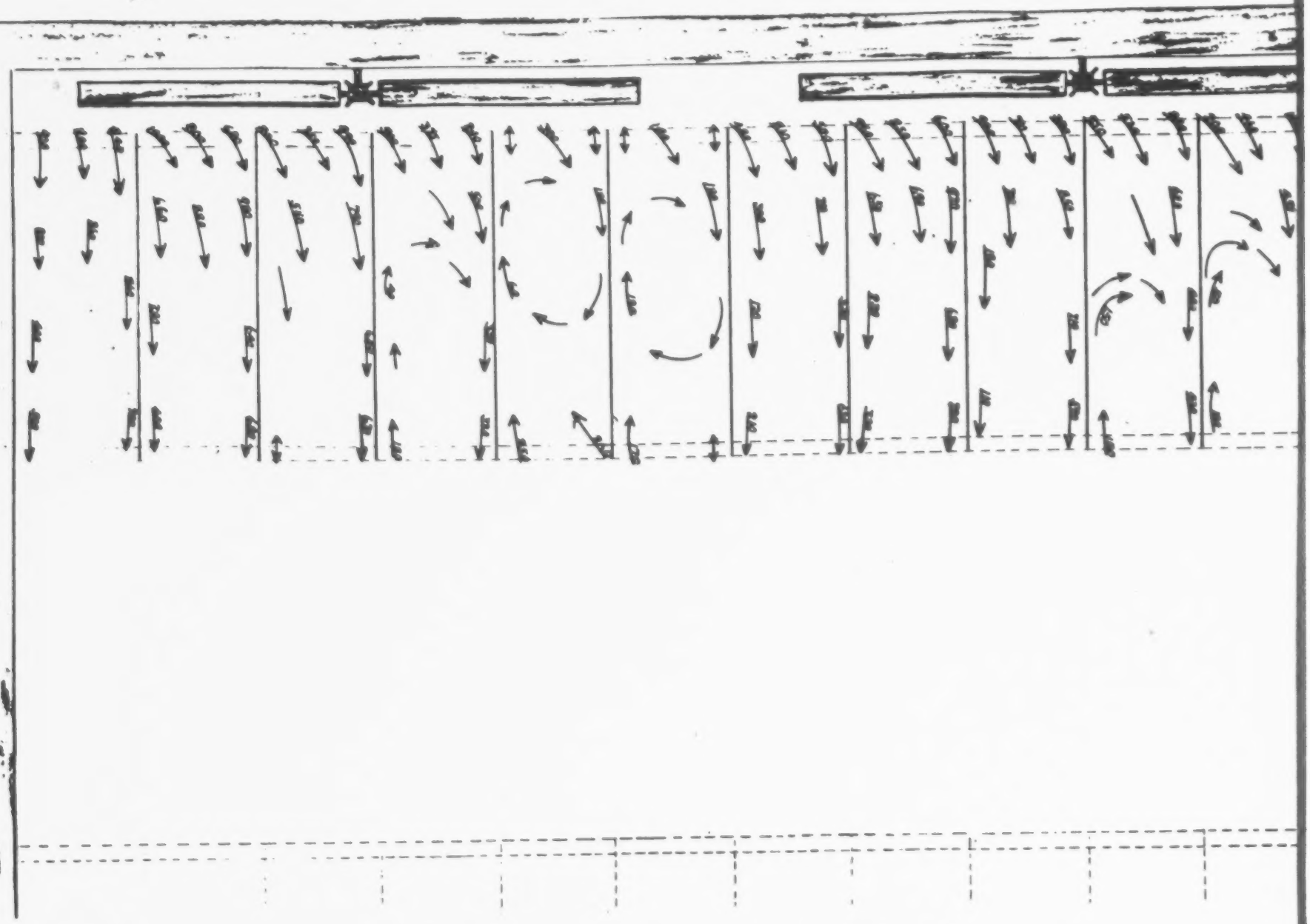

Diagram of air currents on floor of incubator below bottom tray. K K

Arrows show general direction of air currents.
Numbers give approximate speed of currents as recorded by anemometer.

Fans were rotating counter clockwise 208-210 R.P.M.

SNOW-INCUBATOR

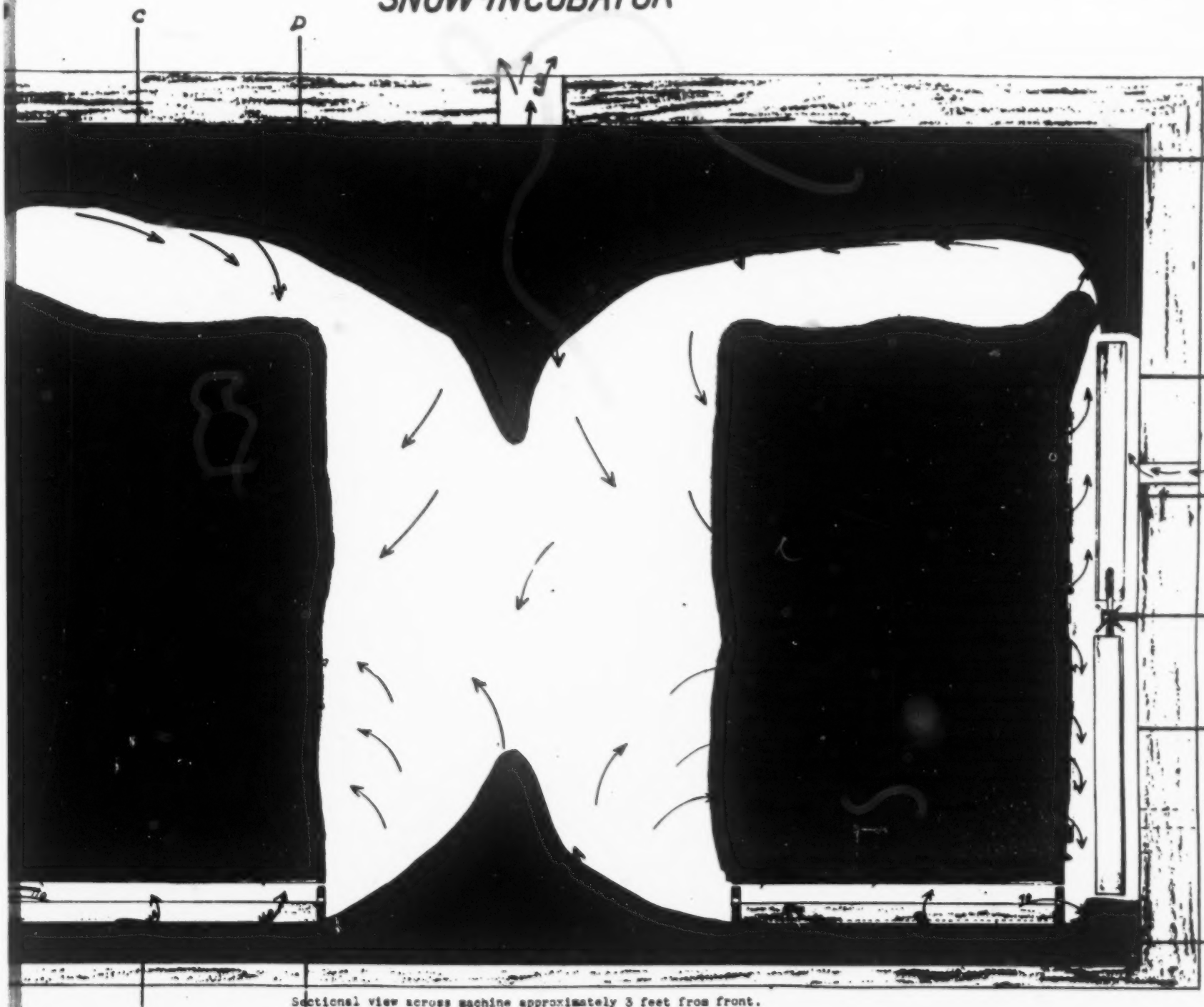

Sectional view across machine approximately 3 feet from front.

Arrows show general direction of air currents. Numbers give approximate speed of currents as recorded by anemometer.

Readings in lower two trays were taken with the anemometers in the trays.

Fans were rotating counter clockwise 208-210 R.P.M.

← 200

← 310

Short arrows between upper twelve trays show direction and approximate speed of air currents near center of trays. In these readings, the anemometer was placed in the trays in normal operating position.

Long arrows sweeping across sides of upper twelve trays show currents between tray columns.

Plfs. Ex. 13

SNOW-INCUBATOR

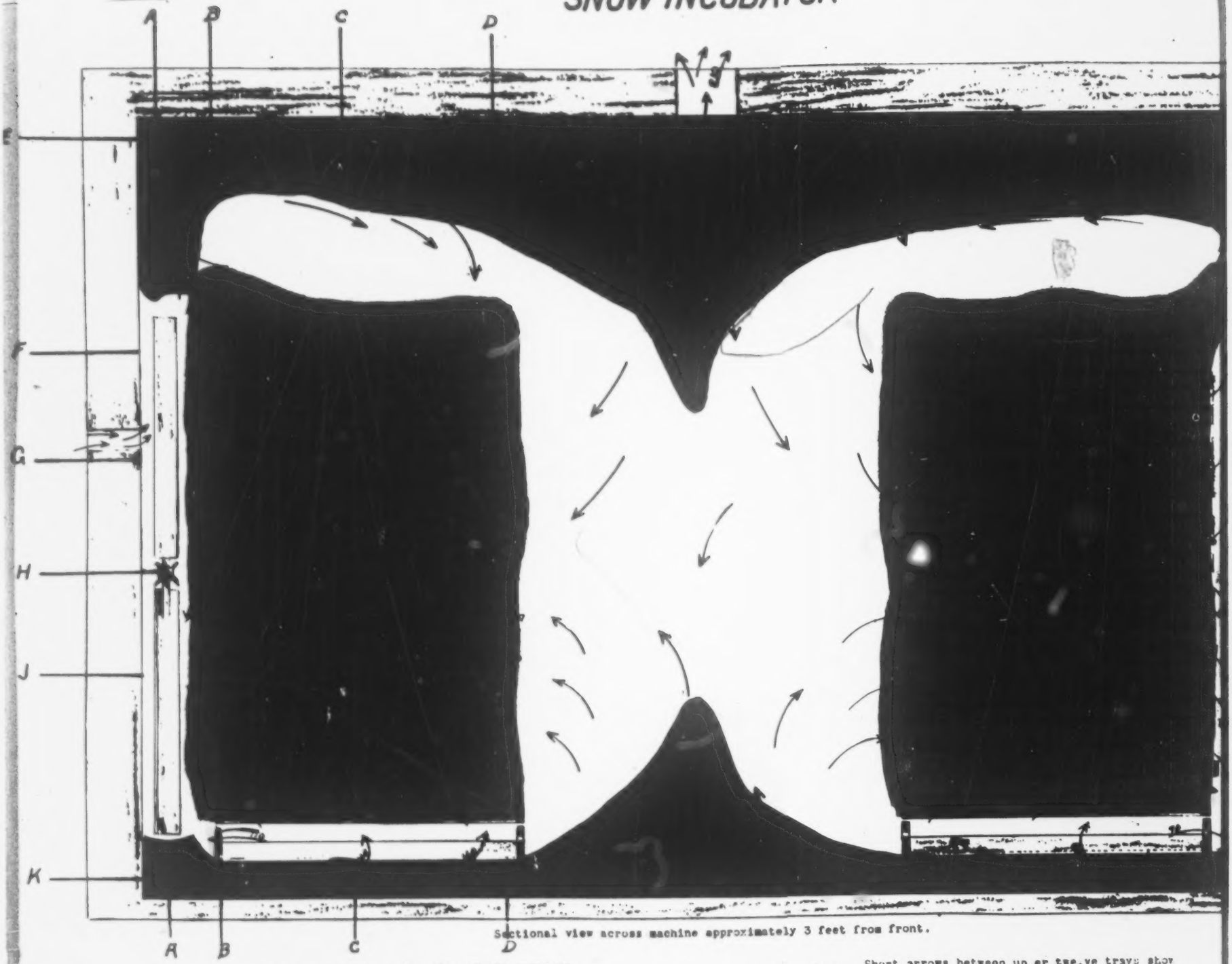

Sectional view across machine approximately 3 feet from front.

Arrows show general direction of air currents. Numbers give approximate speed of currents as recorded by anemometer.

Readings in lower two trays were taken with the anemometers in the trays.

Fans were rotating counter clockwise 208-210 [illegible].

← 200

Short arrows between upper twelve trays show direction and approximate speed of air currents near center of trays. In these readings, the anemometer was placed in the trays in normal operating position.

← 310

Long arrows sweeping across sides of upper twelve trays show currents between tray columns.

SNOW INCUBATOR

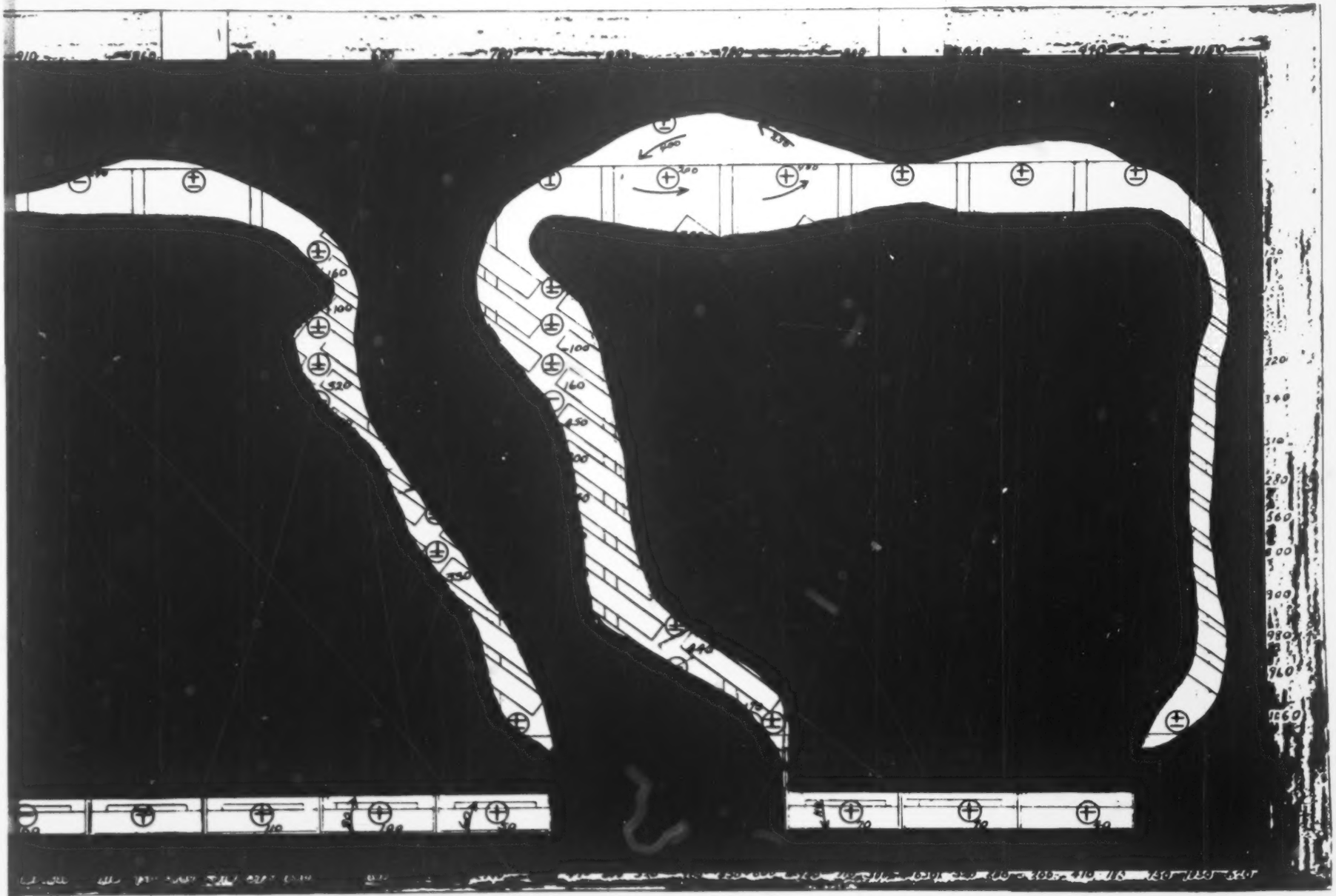

Sectional view in plane parallel to fans and approximately six inches in front of fans. *B*.

⊕ 100 − Shows position of anemometer, direction of air flow, and approximate speed of currents.

⊖ − Air flowing away from fan.

⊕ − Air flowing to the fan.

⊖ 100 − Approximate speed of air current in lineal feet per minute as recorded by anemometer.

⊕ − Anemometer does not run steadily in one direction when placed in this position.

← 100 Arrows show cross current to anemometer. The numbers give their approximate speed.

In this sectional view all readings were taken with the anemometers parallel to the fans with the exception of the twelve readings along the ceiling. These twelve were taken with the anemometer at right angles to the current. Readings at side of turning trays were taken approximately three inches from rear of the trays. Readings in hatching trays were taken four inches from rear of trays. All other readings were taken in the plane of the rear end of trays.

Fans were rotating counter clockwise 208-210 R.P.M.

Plfs. Ex. 13BB

497

SNOW INCUBATOR

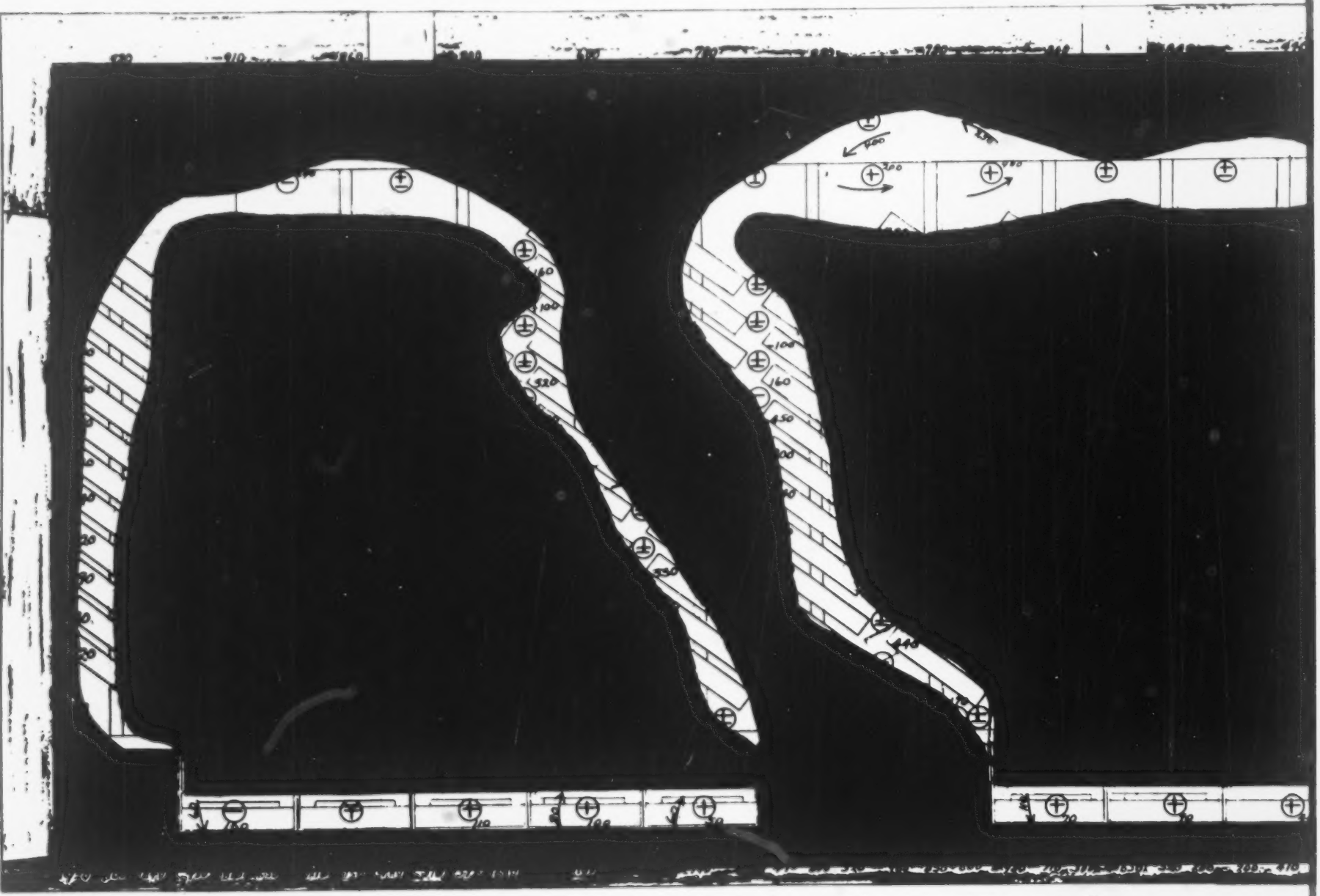

Sectional view in plane parallel to fans and approximately six inches in front of fans. *B*.

⊕ 100 ⊖ – Shows position of anemometer, direction of air flow, and approximate speed of currents.

⊖ – Air flowing away from fan.

⊕ – Air flowing to the fan.

⊖ 100 – Approximate speed of air current in lineal feet per minute as recorded by anemometer.

⊕ ⊖ – Anemometer does not run steadily in one direction when placed in this position.

← 100 Arrows show cross current to anemometer. The numbers give their approximate speed.

In this sectional view all readings were taken with the anemometers parallel to the fans with the exception of the twelve readings along the ceiling. These twelve were taken with the anemometer at right angles to the current. Readings at side of turning trays were taken approximately three inches from rear of the trays. Readings in hatching trays were taken four inches from rear of trays. All other readings were taken in the plane of the rear end of trays.

Fans were rotating counter clockwise 208-210 R.P.M.

SNOW INCUBATOR

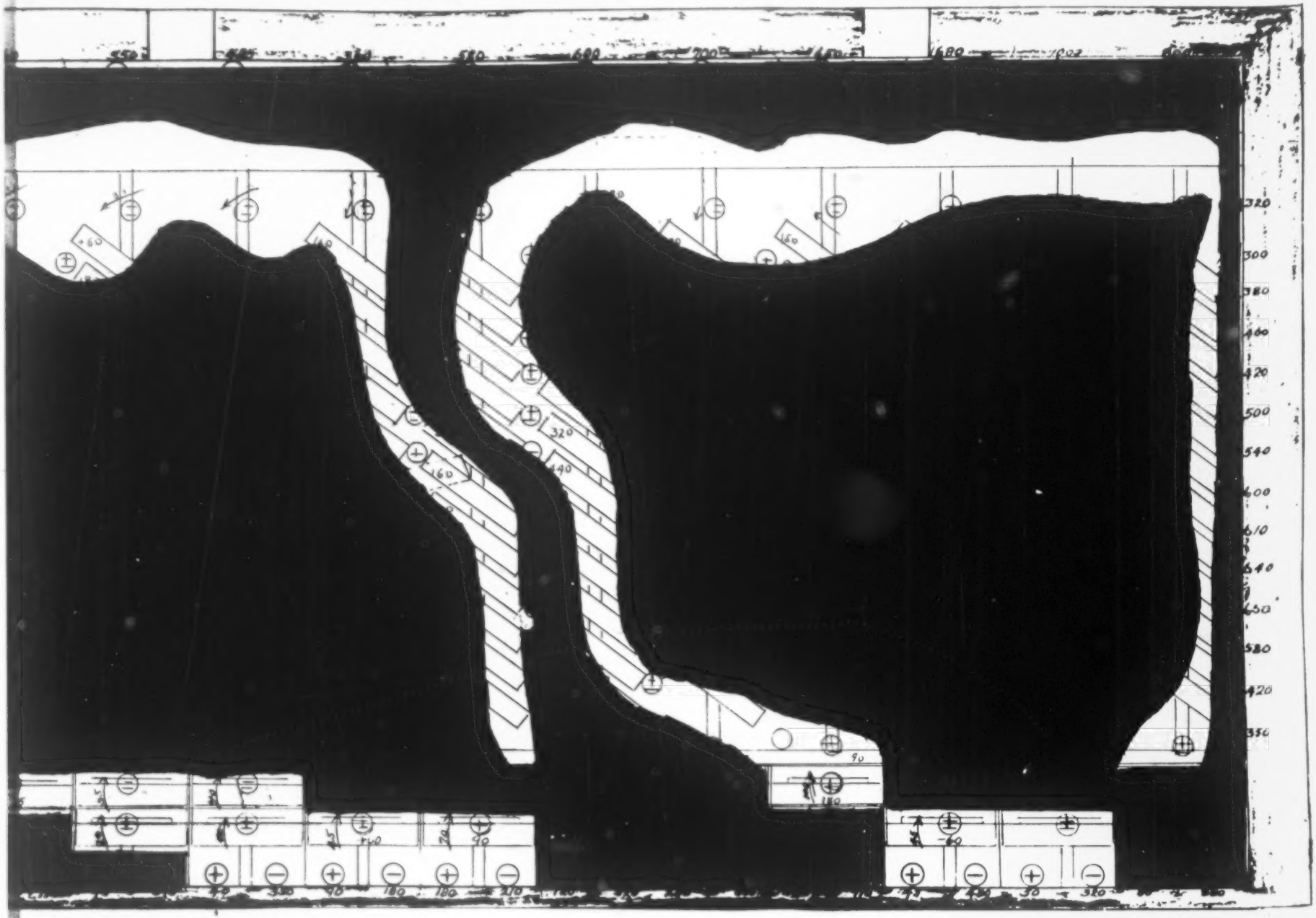

Sectional view in plane parallel to fans and midway between front and rear of the trays. C C

⊕ 100 – Shows position of anemometer, direction of air flow, and approximate speed of air currents.

⊖ – Air flowing away from fan.

⊕ – Air flowing to the fan.

⊖ 100 – Approximate speed of air current in lineal feet per minute as recorded by anemometer.

⊕ – Anemometer does not run steadily in one direction when placed in this position.

← 100 Arrows show cross current to anemometer. The numbers give their approximate speed.

In this sectional view all readings were taken midway between the front and rear of the trays and with the anemometer parallel to the fans with the exception of the twelve along the ceiling. These twelve were taken with the anemometer at right angles to the current.

Fans were rotating counter clockwise 208-210 R.P.M.

Pfs. Ex. 13CC

SNOW INCUBATOR

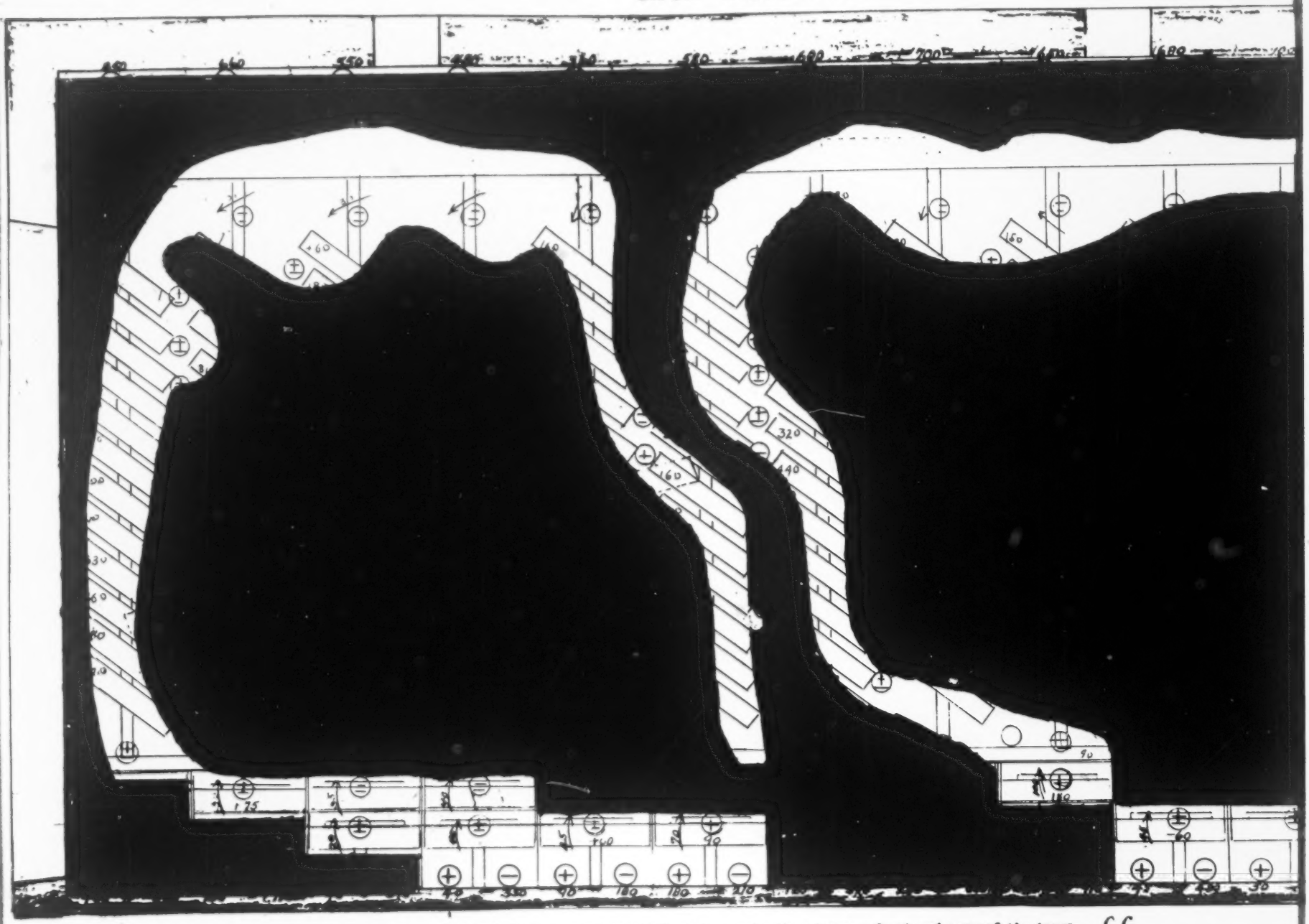

Sectional view in plane parallel to fans and midway between front and rear of the trays. C C

⊕ 100 – Shows position of anemometer, direction of air flow, and approximate speed of air currents.

⊖ – Air flowing away from fan.

⊕ – Air flowing to the fan.

⊖ 100 – Approximate speed of air current in lineal feet per minute as recorded by anemometer.

⊕ – Anemometer does not run steadily in one direction when placed in this position.

← 100 Arrows show cross current to anemometer. The numbers give their approximate speed.

In this sectional view all readings were taken midway between the front and rear of the trays and with the anemometer parallel to the fans with the exception of the twelve along the ceiling. These twelve were taken with the anemometer at right angles to the current.

Fans were rotating counter clockwise 208-210 R.P.M.

SNOW INCUBATOR

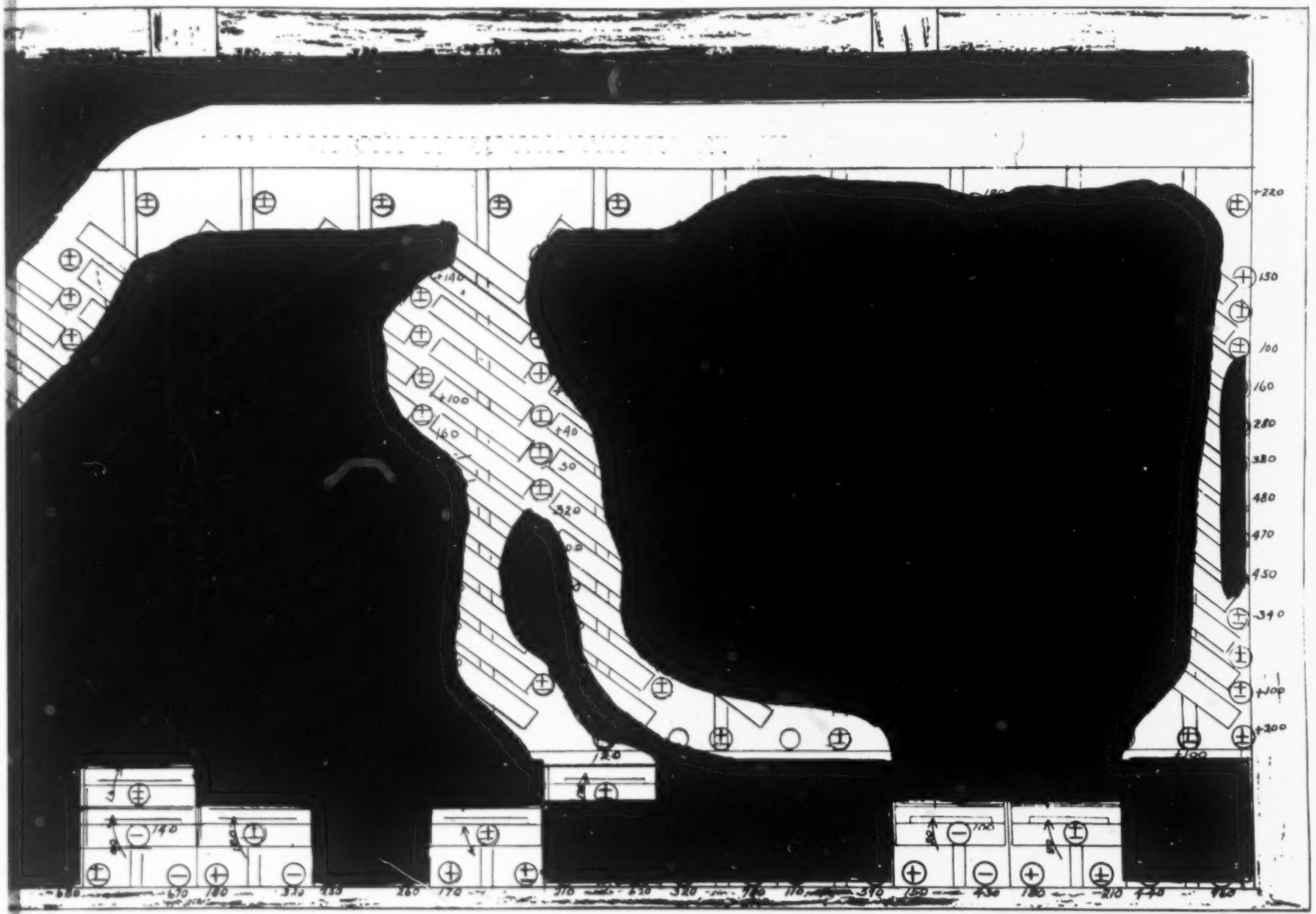

Sectional view in plane parallel to fan and near front of trays. D D

⊕ 100 – Shows position of anemometer, direction of air flow, and approximate speed of air currents.

⊖ – Air flowing away from fan.

⊕ – Air flowing to the fan.

⊖ 100 – Approximate speed of air current in lineal feet per minute as recorded by anemometer.

⊕ – Anemometer does not run steadily in one direction when placed in this position.

← 100 Arrows show cross current to anemometer. The numbers give their approximate speed.

In this sectional view all readings were taken with the anemometer parallel to the fans. Readings at the side of the turning trays were taken approximately three inches from front of trays. Readings in the hatching racks were taken four inches from front of trays. All other readings were taken in the plan of the front of the trays.

Fans were rotating counter clockwise 208-210 R.P.M.

Plfs. Ex. 13DD

501

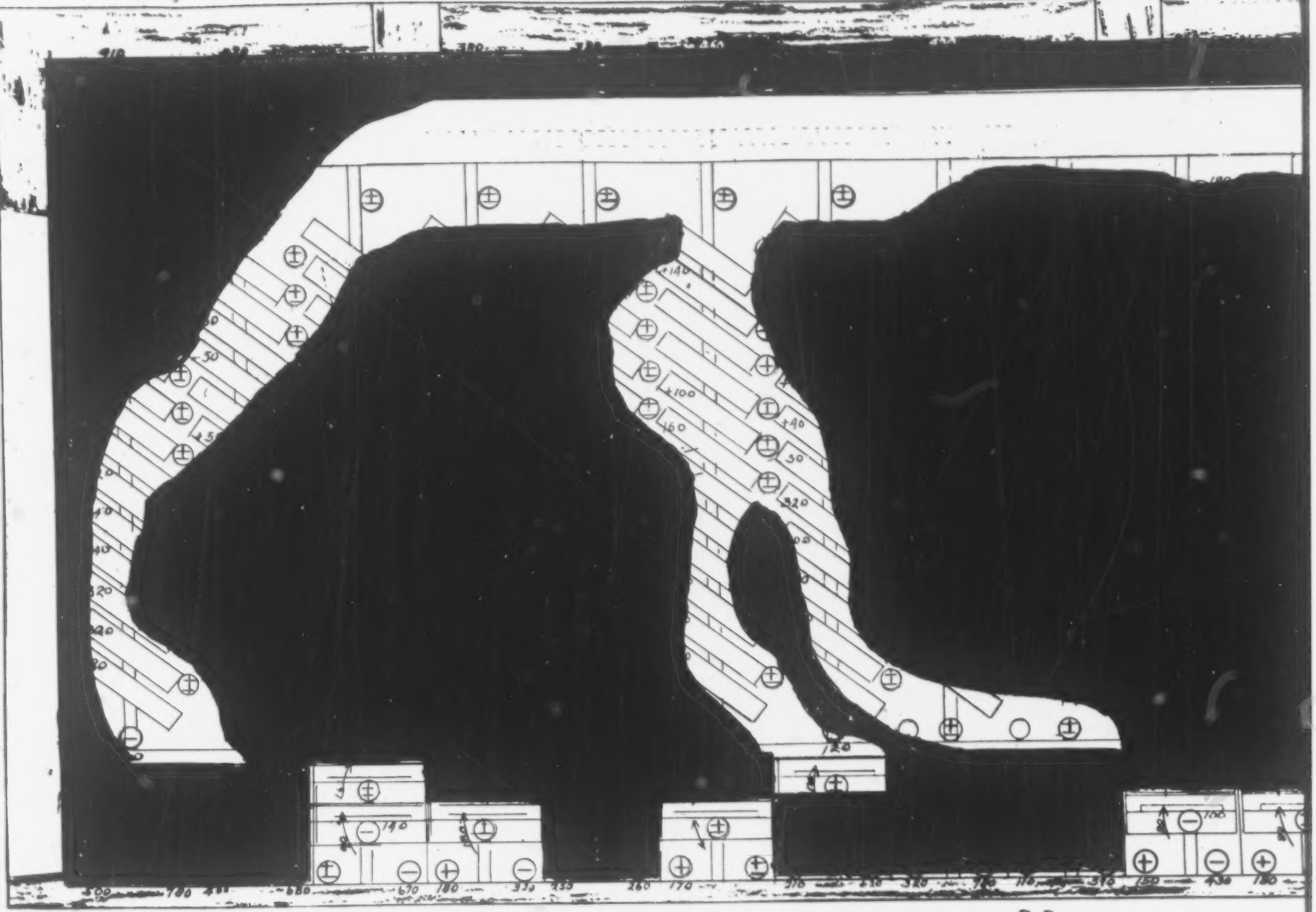

Sectional view in plane parallel to f[illegible] and near front of trays. *D D*

⊕ 100 – Shows position of anemometer, direction of air flow, and approximate speed of air currents.

⊖ – Air flowing away from fan.

⊕ – Air flowing to the fan.

⊖ 100 – Approximate speed of air current in lineal feet per minute as recorded by anemometer.

⊕ – Anemometer does not run steadily in one direction when placed in this position.

← 100 Arrows show cross current to anemometer. The numbers give their approximate speed.

In this sectional view all readings were taken with the anemometer parallel to the fans. Readings at the side of the turning trays were taken approximately three inches from front of trays. Readings in the hatching racks were taken four inches from front of trays. All other readings were taken in the plan of the front of the trays.

Fans were rotating counter clockwise 208-210 R.P.M.

SNOW-INCUBATOR

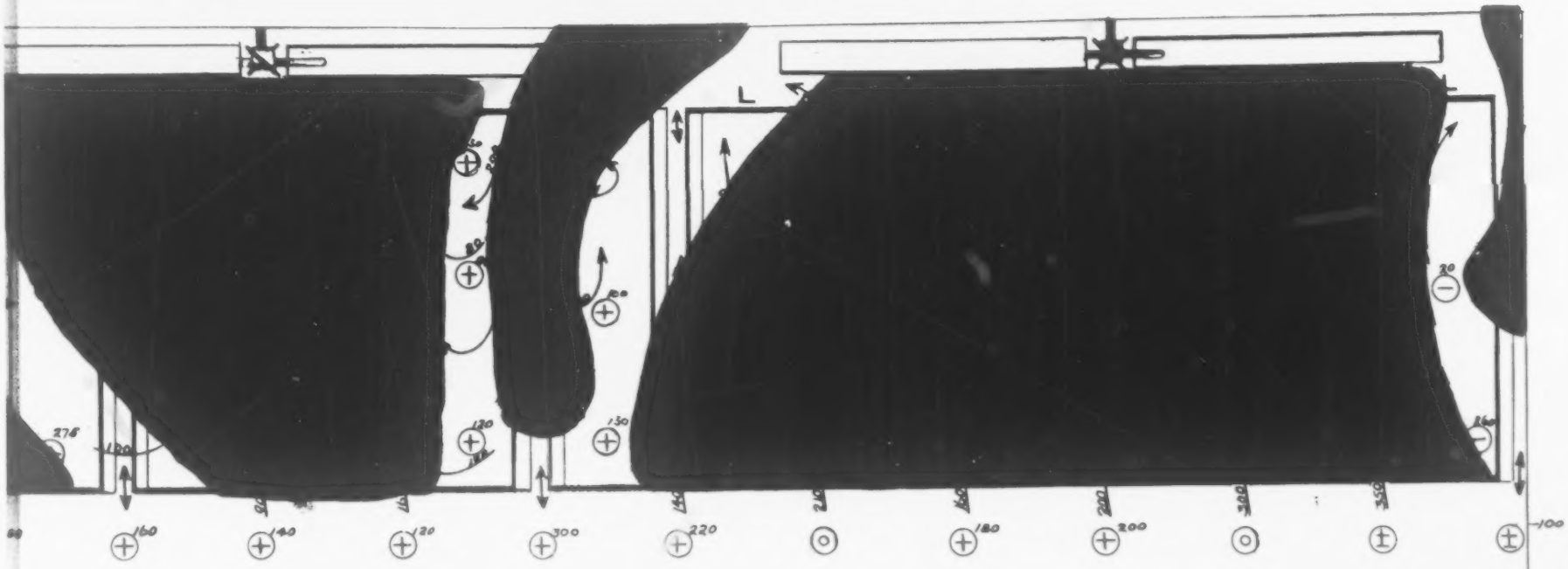

Horizontal section on left side of incubator in plane of 2nd tray from top. F F

⊕ 100 – Circles in trays give position and reading of anemometers when placed flat on bottom of tray.

⊕ – Plus reading indicates air moving downward through bottom of tray.

⊖ – Minus means air moves upward.

⊕ – Plus or minus indicates anemometer does not run steadily in one direction when in this position.

⊙ – Zero means no movement.

A – Anemometer readings shown in this line were taken between tray columns at edge of corridor, holding anemometer parallel to floor of incubator.

While collecting data for this diagram, trays were turned approximately 45 degrees from horizontal with left side down or with trays opposite to position shown in "Sectional view in plane of fans".

Readings between trays were taken with anemometers parallel to fans.

Arrows in trays show general direction and approximate speed of air currents passing through tray columns.

Fans were rotating counter clockwise 208-210 R. P. M.

Plfs. Ex. 13FF

503

SNOW-INCUBATOR

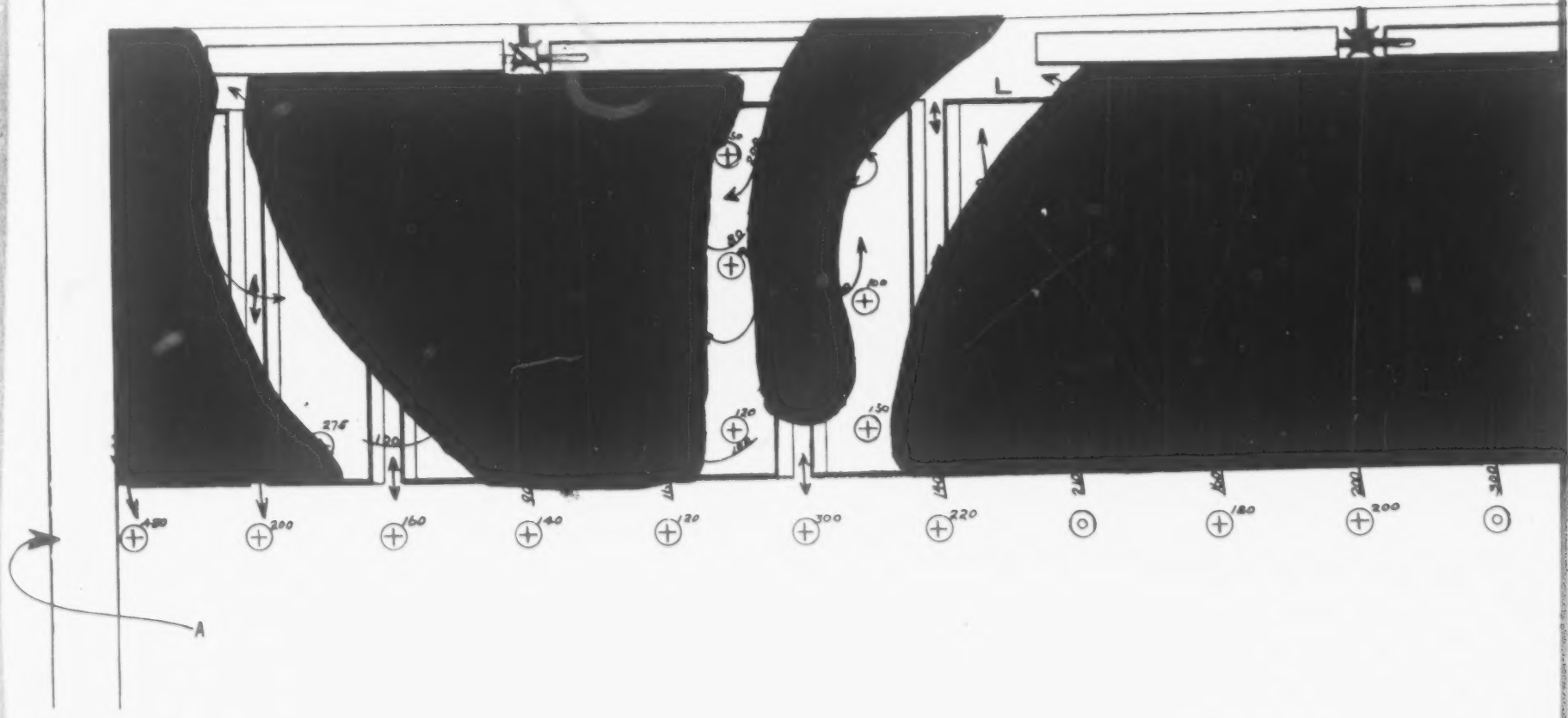

Horizontal section on left side of incubator in plane of 2nd tray from top. F F

⊕ 100 – Circles in trays give position and reading of anemometers when placed flat on bottom of tray.

⊕ – Plus reading indicates air moving downward through bottom of tray.

⊖ – Minus means air moves upward.

⊕ – Plus or minus indicates anemometer does not run steadily in one direction when in this position.

⊙ – Zero means no movement.

A – Anemometer readings shown in this line were taken between tray columns at edge of corridor, reading anemometer parallel to floor of incubator.

While collecting data for this diagram, trays were turned approximately 45 degrees from horizontal with left side down or with trays opposite to position shown in "Sectional view in plane of fans".

Readings between trays were taken with anemometers parallel to fans.

Arrows in trays show general direction and approximate speed of air currents passing through tray columns.

Fans were rotating counter clockwise 205-210 R. P. M.

SNOW-INCUBATOR

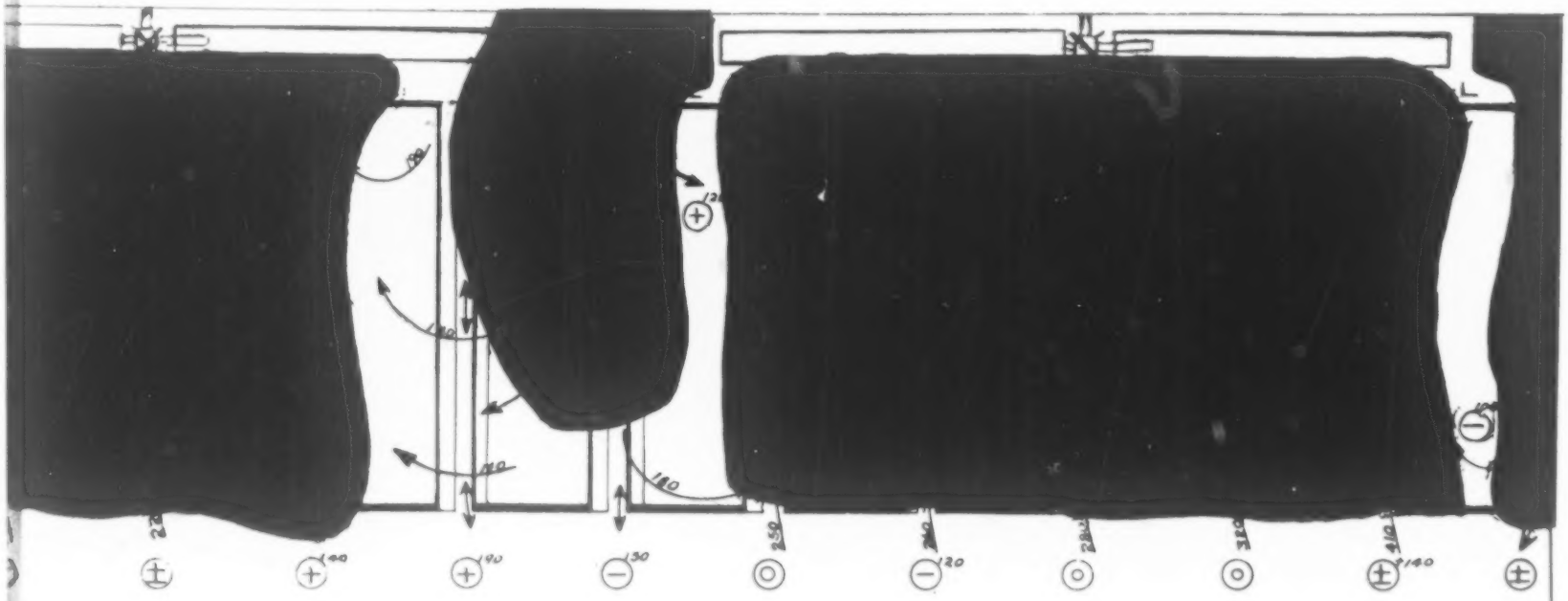

Horizontal section on left side of incubator in plane of 5th tray from top. G G

+100 – Circles in trays give position of reading of anemometers when placed flat on bottom of tray.

\+ – Plus reading indicates air moving downward through bottom of tray.

− – Minus means air moves upward.

± – Plus or minus indicates anemometer does not run steadily in one direction when in this position.

⊙ – Zero means no movement.

^ – Anemometer readings shown in this line were taken between trays columns at edge of corridor, holding anemometer parallel to floor of incubator.

While collecting data for this diagram, trays were turned approximately 45 degrees from horizontal with left side down or with trays opposite to position shown in "Sectional view in plane of fans".

Readings between trays were taken with anemometers parallel to fans.

Arrows in trays show general direction and approximate speed of air currents passing through tray columns.

Fans were rotating counter clockwise 230-240 R. P. M.

Plfs. Ex. 13 GG

505

SNOW-INCUBATOR

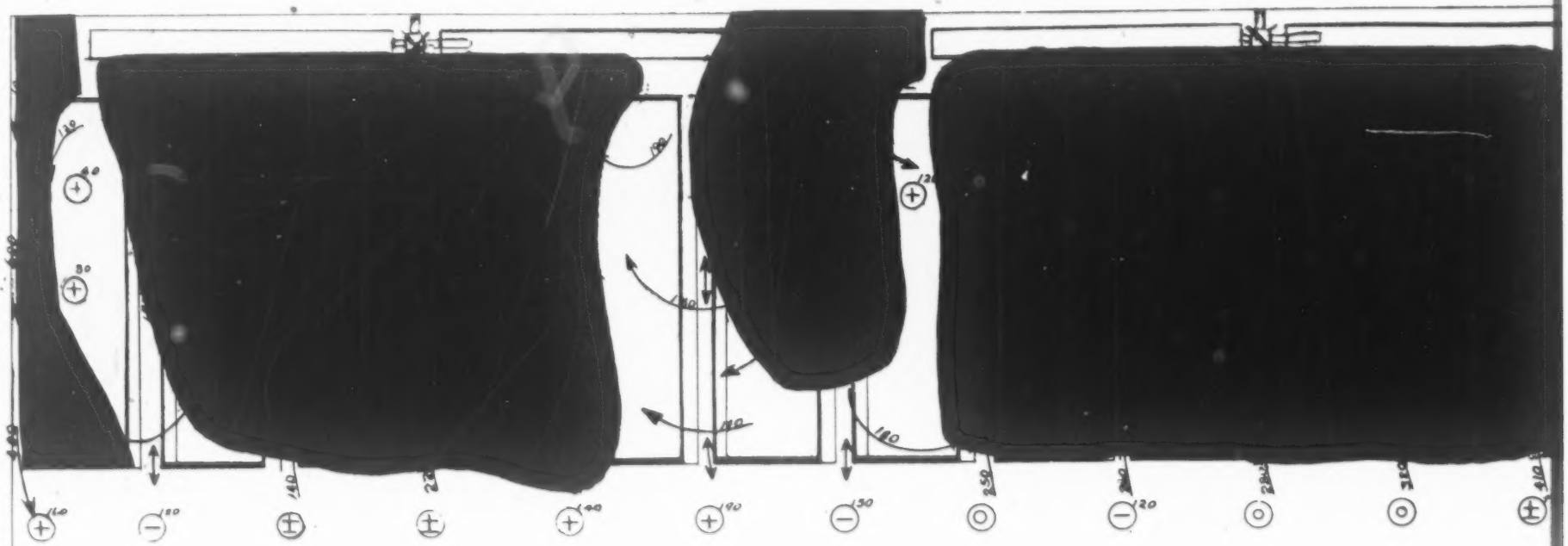

A

Horizontal section on left side of incubator in plane of 5th tray from top. G G

⊕ 100 − Circles in trays give position of reading of anemometers when placed flat on bottom of tray.

⊕ − Plus reading indicates air moving downward through bottom of tray.

⊖ − Minus means air moves upward.

⊜ − Plus or minus indicates anemometer does not run steadily in one direction when in this position.

⊙ − Zero means no movement.

A − Anemometer readings shown in this line were taken between trays columns at edge of corridor, holding anemometer parallel to floor of incubator.

While collecting data for this diagram, trays were turned approximately 45 degrees from horizontal with left side down or with trays opposite to position shown in "Sectional view in plane of fans".

Readings between trays were taken with anemometers parallel to fans.

Arrows in trays show general direction and approximate speed of air currents passing through tray columns.

Fans were rotating counter clockwise 208-210 R. P. M.

SNOW-INCUBATOR

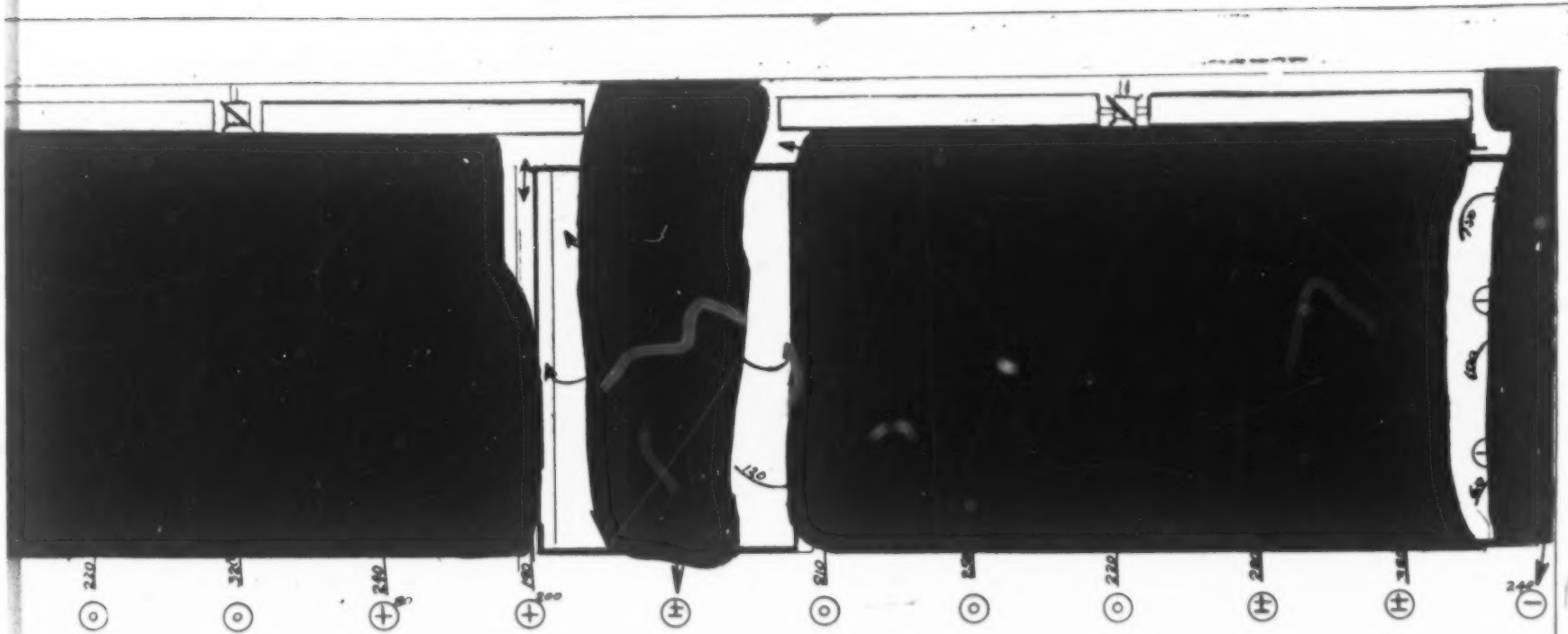

Horizontal section on left side of incubator in plane of 6th tray from top. H H

⊕ 100 / − Circles in trays give position and reading of anemometers when placed flat on bottom of tray.

⊕ – Plus reading indicates air moving downward through bottom of tray.

⊖ – Minus means air moves upward.

⊛ – Plus or minus indicates anemometer does not run steadily in one direction when in this position.

⊙ – Zero means no movement.

A – Anemometer readings shown in this line were taken between tray columns at edge of corridor, holding anemometer parallel to floor of incubator.

While collecting data for this diagram, trays were turned approximately 45 degrees from horizontal with left side down or with trays opposite to position shown in "Sectional view in plane of fans".

Readings between trays were taken with anemometers parallel to fans.

Arrows in trays show general direction and approximate speed of air currents passing through tray columns.

Fans were rotating counter clockwise 208-210 R. P. M.

Pfs. Ex. 13HH

507

SNOW-INCUBATOR

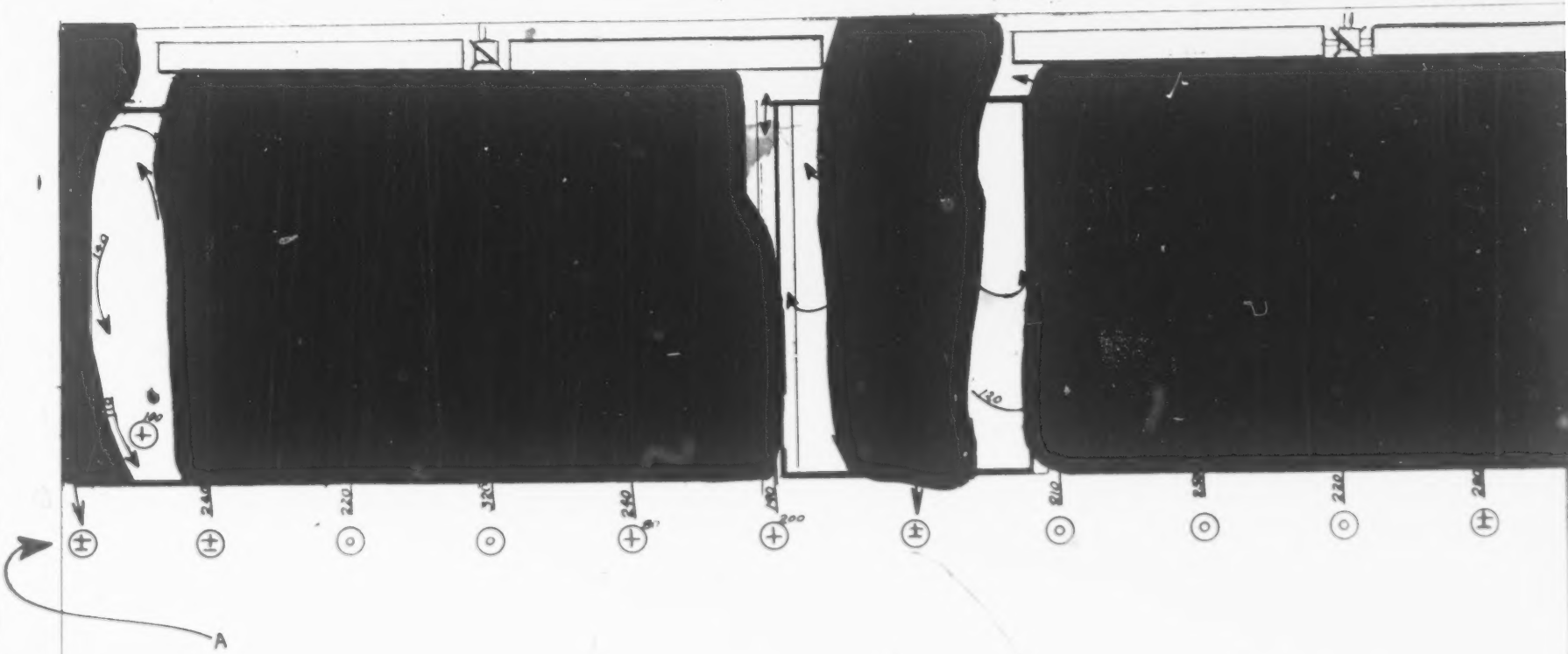

Horizontal section on left side of incubator in plane of 8th. tray from top. H H

⊕ 100 ⊖ – Circles in trays give position and reading of anemometers when placed flat on bottom of tray.

⊕ – Plus reading indicates air moving downward through bottom of tray.

⊖ – Minus means air moves upward.

⊕⊖ – Plus or minus indicates anemometer does not run steadily in one direction when in this position.

⊙ – Zero means no movement.

A – Anemometer readings shown in this line were taken between tray columns at edge of corridor, holding anemometer parallel to floor of incubator.

While collecting data for this diagram, trays were turned approximately 45 degrees from horizontal with left side down or with trays opposite to position shown in "Sectional view in plane of fans".

Readings between trays were taken with anemometers parallel to fans.

Arrows in trays show general direction and approximate speed of air currents passing through tray columns.

Fans were rotating counter clockwise 208-210 R. P. M.

SNOW-INCUBATOR

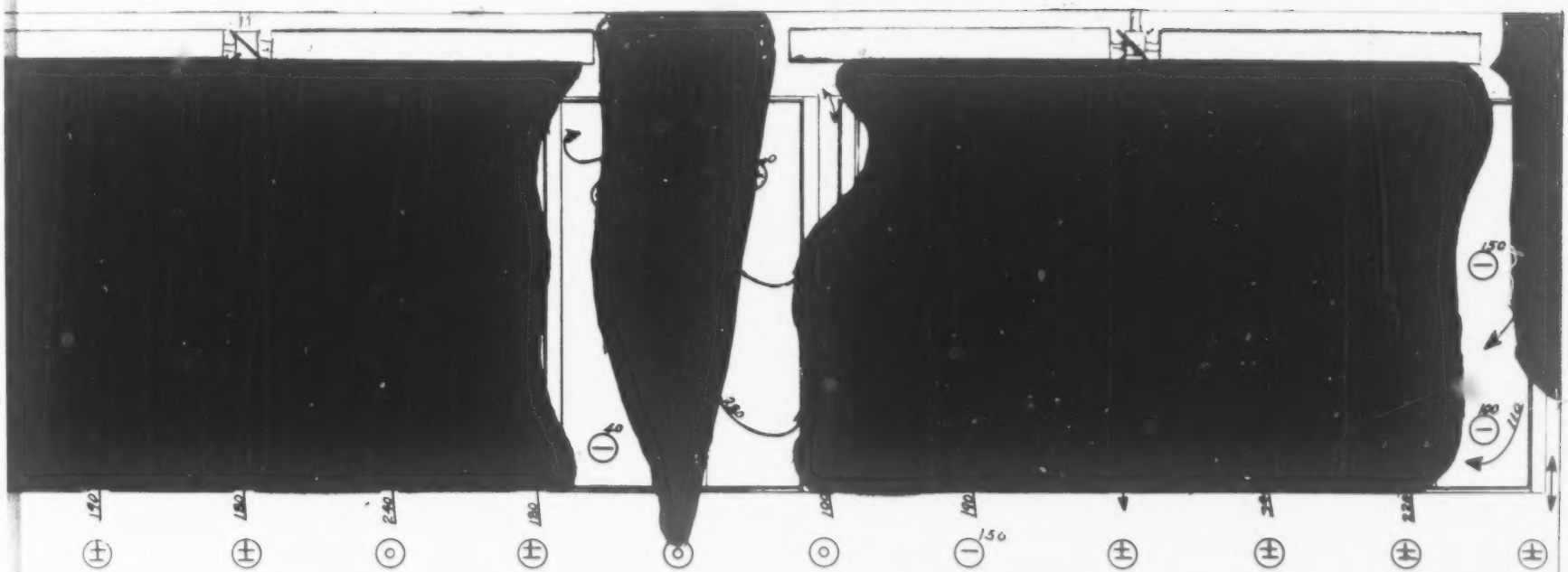

Horizontal section on left side of incubator in plane of 11th tray from top. J J

⊕ 100 −	Circles in trays give position and reading of anemometers when placed flat on bottom of tray.
⊕ −	Plus reading indicates air moving downward through bottom of tray.
⊖ −	Minus means air moves upward.
± −	Plus or minus indicates anemometer does not run steadily in one direction when in this position.
⊙ −	Zero means no movement.
A −	Anemometer readings shown in this line were taken between tray columns at edge of corridor, holding anemometer parallel to floor of incubator.

While collecting data for this diagram, trays were turned approximately 45 degrees from horizontal with left side down or with trays opposite to position shown in "Sectional view in plane of fans".

Readings between trays were taken with anemometers parallel to fans.

Arrows in trays show general direction and approximate speed of air currents passing through tray columns.

Fans were rotating counter clockwise 208-210 R. P. M.

Plfs. Ex. 13 JJ

SNOW-INCUBATOR

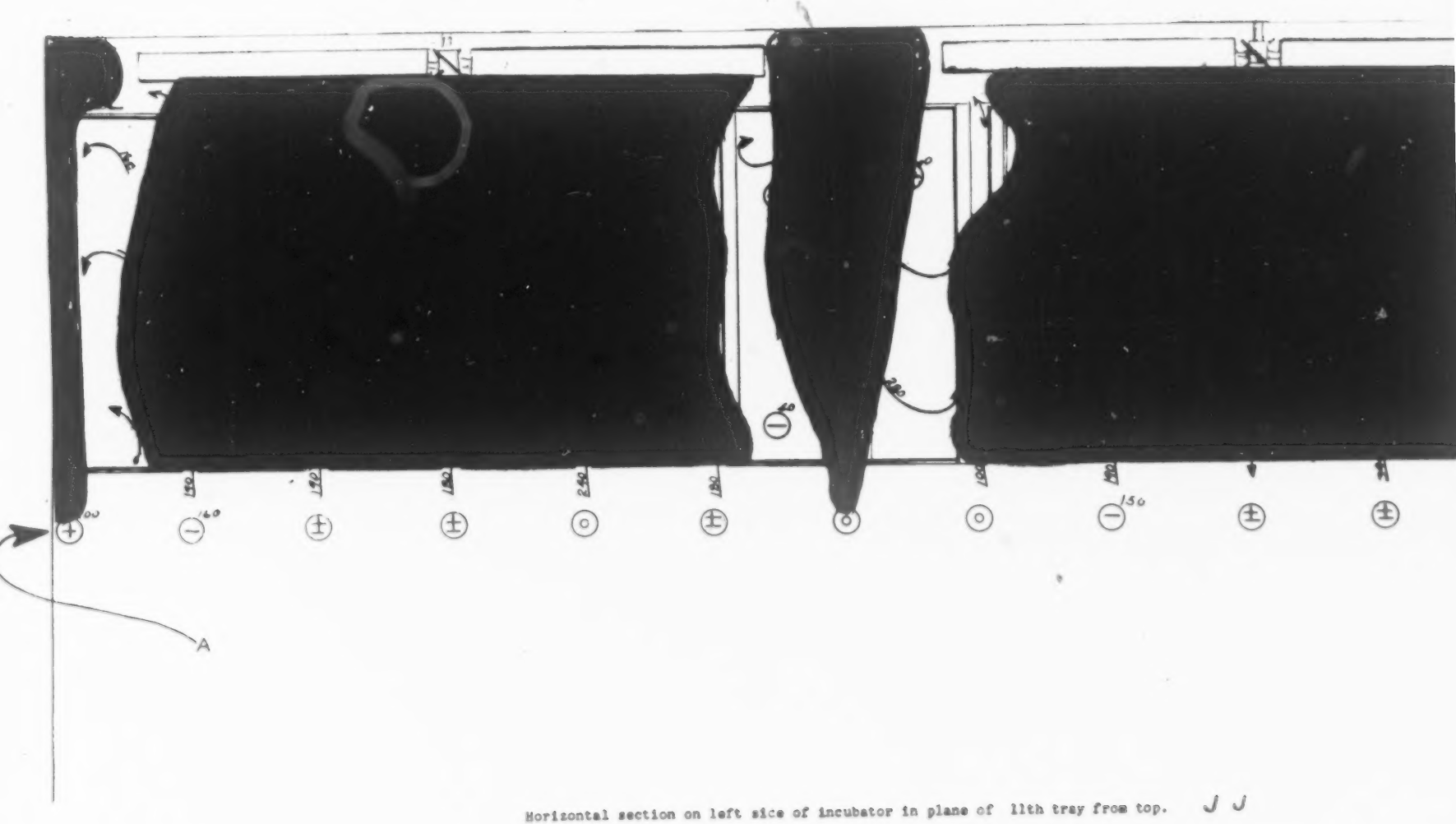

Horizontal section on left side of incubator in plane of 11th tray from top. J J

⊕ 100 −	Circles in trays give position and reading of anemometers when placed flat on bottom of tray.
⊕ −	Plus reading indicates air moving downward through bottom of tray.
⊖ −	Minus means air moves upward.
± −	Plus or minus indicates anemometer does not run steadily in one direction when in this position.
⊙ −	Zero means no movement.
A −	Anemometer readings shown in this line were taken between tray columns at edge of corridor, holding anemometer parallel to floor of incubator.

While collecting data for this diagram, trays were turned approximately 45 degrees from horizontal with left side down or with trays opposite to position shown in "Sectional view in plane of fans".

Readings between trays were taken with anemometers parallel to fans.

Arrows in trays show general direction and approximate speed of air currents passing through tray columns.

Fans were rotating counter clockwise 200-210 R. P. M.

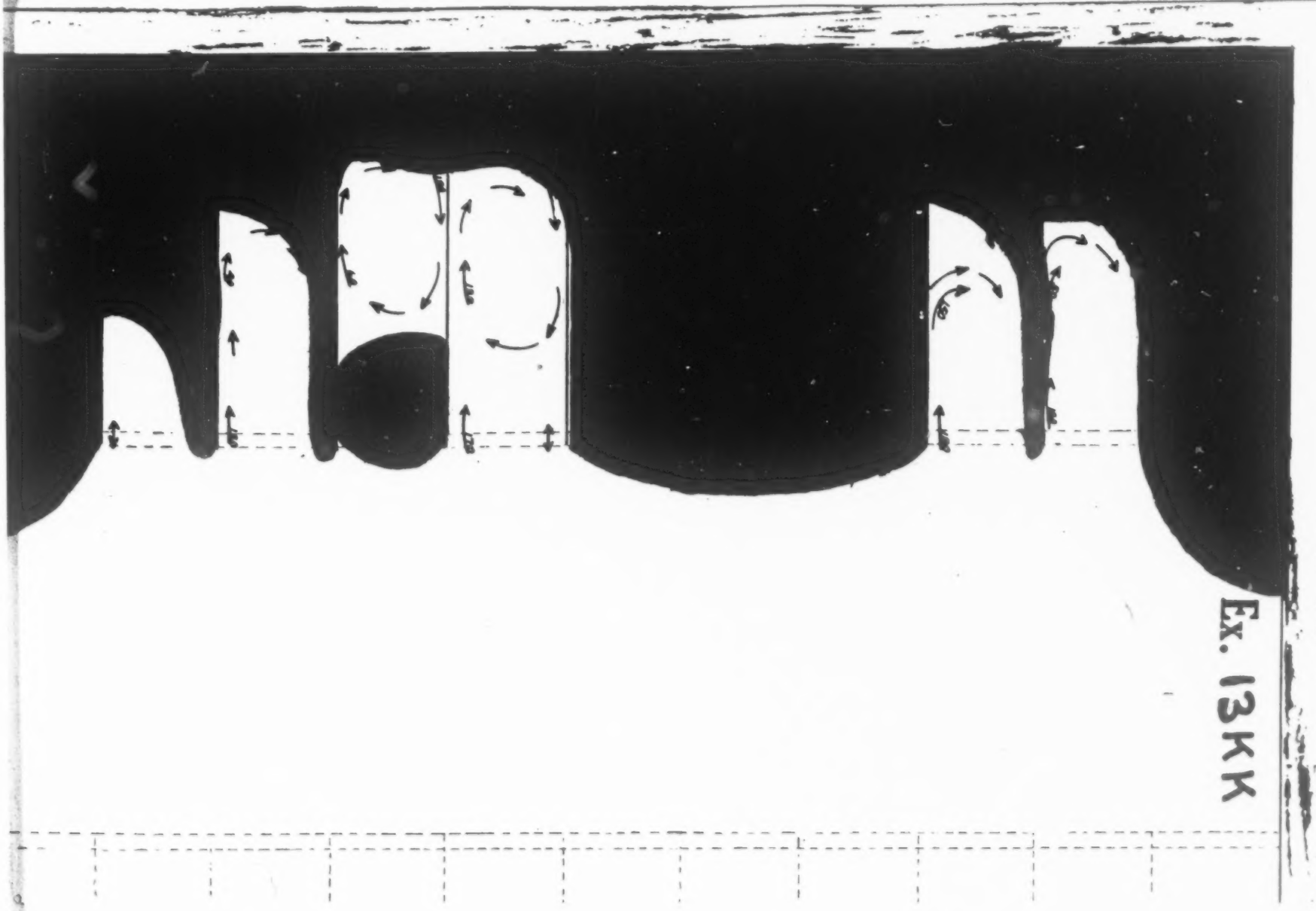

Ex. 13KK

511

Diagram of air currents on floor of incubator below bottom tray. K K

Arrows show general direction of air currents.
Numbers give approximate speed of currents as recorded by anemometer.

Fans were rotating counter clockwise 130-210 R.P.M.

Diagram of air currents on floor of incubator below bottom tray. K K

Arrows show general direction of air currents.
Numbers give approximate speed of currents as recorded by anemometer.

Fans were rotating counter clockwise 130-210 R.P.M.

Plfs. Ex. 15

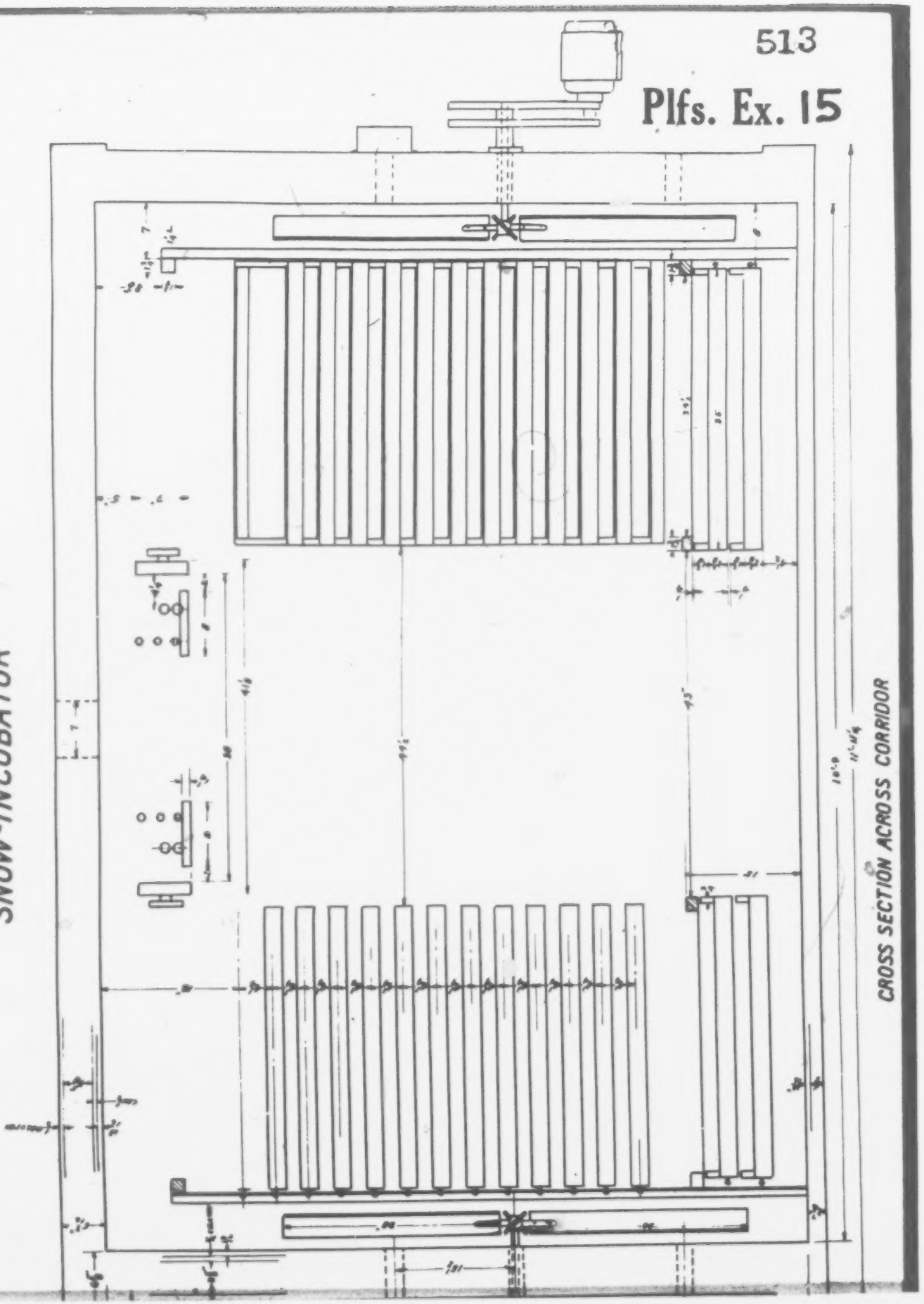

SNOW-INCUBATOR

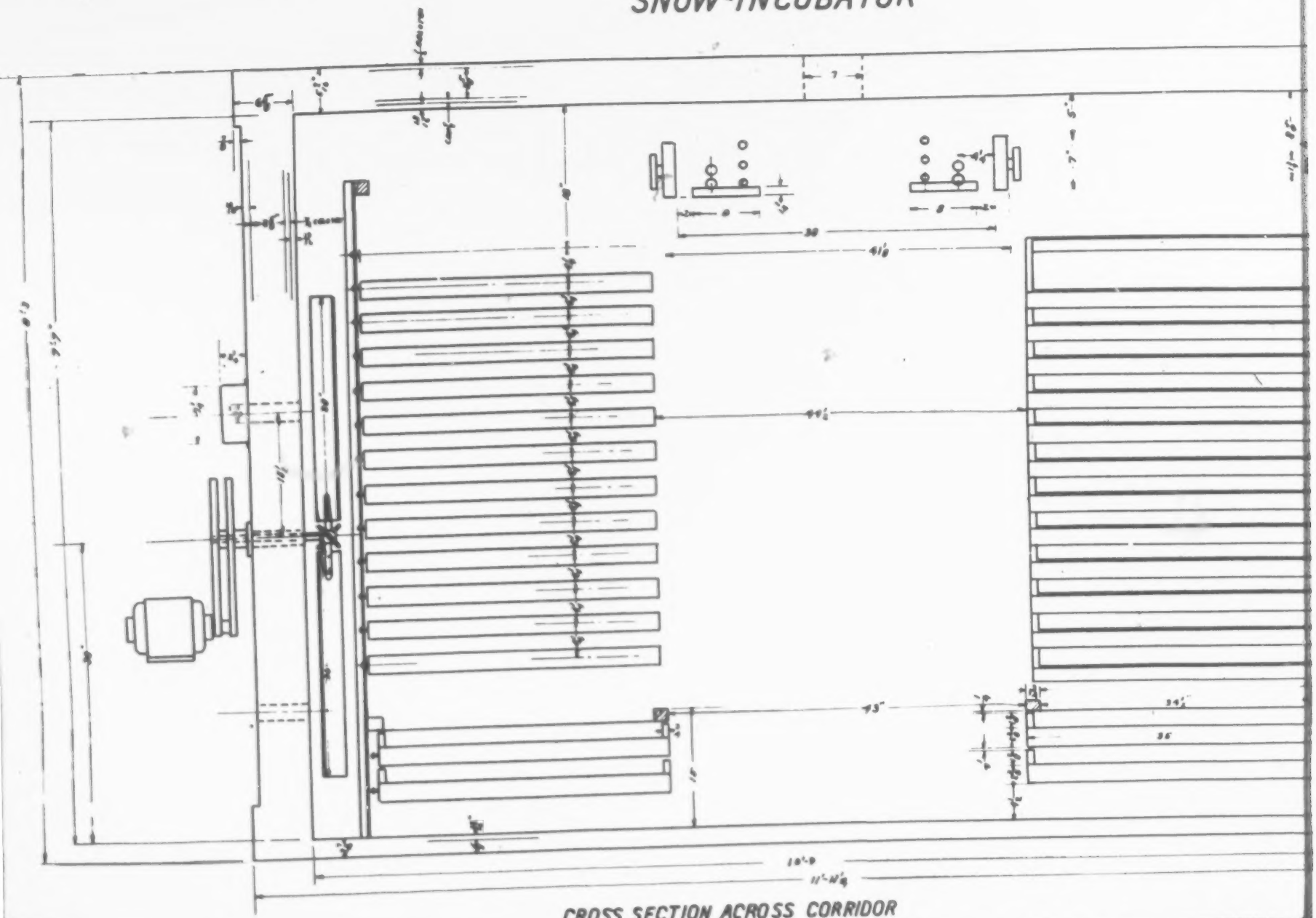

CROSS SECTION ACROSS CORRIDOR

Plfs. Ex. 18

No. 219 Eq (18)

City Sleepy Eye State Minn Date 6-3, 1925

Street County Brown, R. F. D.

Later

To Smith Incubator Company,
1982 West 74th St.
Cleveland, Ohio.

Please enter my (our) order for One (1) Smith Incubator (47,000 egg capacity) F. O. B.

The list price of said incubator is $6700.00. If this order is signed between the dates of June 15th, 1925, and January 1st, 1926, purchaser will receive off the list price, a discount amounting to one dollar per day for each day from the date of signing this order up to January 1st, 1926.

Purchaser will receive a further discount of $500.00 off the list price, provided full payment shall have been made in cash to Smith Incubator Company on or before the date said incubator is erected.

In consideration hereof I (we) agree to make the following payments to the order of Smith Incubator Company at 1982 West 74th Street, Cleveland, Ohio, to wit:

Cash payment with order $1000.00 $1000.00 by payment Oct 1st 1925	$2,000.00
One deferred payment, due May 1st, 1926	$1190.20
One deferred payment, due June 1st, 1926	$1100.00
One deferred payment, due May 1st, 1927	$1150.00
One deferred payment, due June 1st, 1927	$1150.00

Said deferred payments to be evidenced by notes, said notes to be dated and signed concurrently with this order, and to bear interest at the rate of six per cent per annum from and after October 1st, 1925.

This order is subject to the following conditions and provisions:

1. I (we) agree to transport the above incubator from railroad station to place where same is to be erected at my (our) expense, without delay and I (we) agree to pay all demurrage charges caused by my (our) delay in transporting same after arrival of goods at designated depot.

2. Smith Incubator Company agrees to erect said incubator without expense to me (us) and to test same by factory expert provided by Smith Incubator Company for one day free of charge to me (us), said test to be made on or before Oct 1st 1925, provided building is ready for occupancy 30 days prior to said date.

3. Smith Incubator Company is not to be held responsible for any delay in the completion of this contract caused by strikes, fires, floods, unavoidable accidents, war, delays in transportation, or any act of God, or other causes beyond its control, and in such case the time for completion of this contract shall be proportionately extended.

4. Title to the within described property shall remain in the Smith Incubator Company until the entire purchase price thereof and any note or notes including renewals given therefor, or any judgment for the whole or any part thereof has been paid in full, no matter by what manner or whatever degree said property may be attached to the realty, and I (we) hereby agree not to remove the said property from the place of original delivery so long as any part of the purchase price remains unpaid without first securing the written consent of the Smith Incubator Company.

5. I (we) further agree to assume the risk of loss and damage to said property and in case of any damage to said property by fire, water or any other cause, I (we) agree to pay to said Smith Incubator Company the amount of such damage, and in case of destruction thereof from any cause, to pay the above valuation, less any proportion of the purchase price which may have been paid, and I (we) agree to have said property fully insured in standard insurance companies at my (our) own expense, with loss payable to said Smith Incubator Company as its interest may appear, and if I (we) fail to have said property so insured, then the Smith Incubator Company may have the same fully insured and charge the premium to me (us), which shall be added to the purchase price of said property.

6. In case of my (our) failure to make any payment in time or in the manner as herein provided, the entire unpaid balance of purchase price shall become immediately due and payable, and the Smith Incubator Company, or its agents, may without legal process, re-take said property and operate same on the premises for the remainder of the hatching season for its own profit; and in any such event I (we) hereby agree to allow you free and unhindered access on the premises or in the building where said property is situated, or to make delivery of said property to you immediately upon request.

7. In the event of the Smith Incubator Company retaking said property as above provided, any amount that may have been paid thereon shall be considered as payment for use, ordinary wear and depreciation of said property while in my (our) possession, and shall be retained by the Smith Incubator Company. If the amount so paid does not cover the reasonable rental value of said property, then I (we) hereby agree to pay you on demand the balance of such reasonable rental. Nothing in this order shall be construed as obligating the Smith Incubator Company to accept return of property tendered in lieu of purchase price agreed to be paid.

8. All statutory provisions as to retaking and resale of the property within described are hereby expressly waived. If a claim hereunder is placed in attorney's hands for collection, ten per cent (10%) shall be added thereto and paid as attorney's fees.

9. Said Incubator is guaranteed by Smith Incubator Company to be of good workmanship and material and any defective part will be replaced any time within one year from date of erection.

10. This order covers all agreements between the Smith Incubator Company and me (us), either expressed or implied; and when approved by said company at its executive office becomes a contract between the parties as purchaser and seller, respectively. It is expressly agreed that the original hereof has been unconditionally released and delivered for transmission to the Smith Incubator Company, and that any notice or communication relating hereto or contemplated hereby shall be made in writing to said Company at Cleveland, Ohio and not otherwise.

Witness: (Signed) E. H. Susw

By

This order is subject to Approval of the Smith Incubator Company at Cleveland, Ohio.
Approved at Cleveland, Ohio.

SMITH INCUBATOR COMPANY.

To Smith Incubator Company,
1982 West 74th St.
Cleveland, Ohio.

Later

Please enter my (our) order for One (1) Smith Incubator (47,000 egg capacity) F. O. b. .....

The list price of said incubator is $6700.00. If this order is signed between the dates of June 15th, 1925, and January 1st, 1926, purchaser will receive off the list price, a discount amounting to one dollar per day for each day from the date of signing this order up to January 1st, 1926.

Purchaser will receive a further discount of $500.00 off the list price, provided full payment shall have been made in cash to Smith Incubator Company on or before the date said incubator is erected.

In consideration hereof I (we) agree to make the following payments to the order of Smith Incubator Company at 1982 West 74th Street, Cleveland, Ohio, to wit:

Cash payment with order $1000.00 $1000.00 by payment 10-7-10-7 1925	$2,000.00
One deferred payment, due May 1st, 1926	$1190.20
One deferred payment, due June 1st, 1926	$1100.00
One deferred payment, due May 1st, 1927	$1150.00
One deferred payment, due June 1st, 1927	$1150.00

Said deferred payments to be evidenced by notes, said notes to be dated and signed concurrently with this order, and to bear interest at the rate of six per cent per annum from and after October 1st, 1925.

This order is subject to the following conditions and provisions:

1. I (we) agree to transport the above incubator from railroad station to place where same is to be erected at my (our) expense, without delay and I (we) agree to pay all demurrage charges caused by my (our) delay in transporting same after arrival of goods at designated depot.

2. Smith Incubator Company agrees to erect said incubator without expense to me (us) and to test same by factory expert provided by Smith Incubator Company for one day free of charge to me (us), said test to be made on or before Oct 1st 1925 ....., provided building is ready for occupancy 30 days prior to said date.

3. Smith Incubator Company is not to be held responsible for any delay in the completion of this contract caused by strikes, fires, floods, unavoidable accidents, war, delays in transportation, or any act of God, or other causes beyond its control, and in such case the time for completion of this contract shall be proportionately extended.

4. Title to the within described property shall remain in the Smith Incubator Company until the entire purchase price thereof and any note or notes including renewals given therefor, or any judgment for the whole or any part thereof has been paid in full, no matter by what manner or whatever degree said property may be attached to the realty, and I (we) hereby agree not to remove the said property from the place of original delivery so long as any part of the purchase price remains unpaid without first securing the written consent of the Smith Incubator Company.

5. I (we) further agree to assume the risk of loss and damage to said property and in case of any damage to said property by fire, water or any other cause, I (we) agree to pay to said Smith Incubator Company the amount of such damage, and in case of destruction thereof from any cause, to pay the above valuation, less any proportion of the purchase price which may have been paid, and I (we) agree to have said property fully insured in standard insurance companies at my (our) own expense, with loss payable to said Smith Incubator Company as its interest may appear, and if I (we) fail to have said property so insured, then the Smith Incubator Company may have the same fully insured and charge the premium to me (us), which shall be added to the purchase price of said property.

6. In case of my (our) failure to make any payment in time or in the manner as herein provided, the entire unpaid balance of purchase price shall become immediately due and payable, and the Smith Incubator Company, or its agents, may without legal process, re-take said property and operate same on the premises for the remainder of the hatching season for its own profit; and in any such event I (we) hereby agree to allow you free and unhindered access on the premises or in the building where said property is situated, or to make delivery of said property to you immediately upon request.

7. In the event of the Smith Incubator Company retaking said property as above provided, any amount that may have been paid thereon shall be considered as payment for use, ordinary wear and depreciation of said property while in my (our) possession, and shall be retained by the Smith Incubator Company. If the amount so paid does not cover the reasonable rental value of said property, then I (we) hereby agree to pay you on demand the balance of such reasonable rental. Nothing in this order shall be construed as obligating the Smith Incubator Company to accept return of property tendered in lieu of purchase price agreed to be paid.

8. All statutory provisions as to retaking and resale of the property within described are hereby expressly waived. If a claim hereunder is placed in attorney's hands for collection, ten per cent (10%) shall be added thereto and paid as attorney's fees.

9. Said Incubator is guaranteed by Smith Incubator Company to be of good workmanship and material and any defective part will be replaced any time within one year from date of erection.

10. This order covers all agreements between the Smith Incubator Company and me (us), either expressed or implied; and when approved by said company at its executive office becomes a contract between the parties as purchaser and seller, respectively. It is expressly agreed that the original hereof has been unconditionally released and delivered for transmission to the Smith Incubator Company, and that any notice or communication relating hereto or contemplated hereby shall be made in writing to said Company at Cleveland, Ohio and not otherwise.

Witness: .....

(Signed) E. H. Lucas

By .....

This order is subject to Approval of the Smith Incubator Company at Cleveland, Ohio.
Approved at Cleveland, Ohio.

SMITH INCUBATOR COMPANY.

This 29 day of Dec, 1925

By L B Burk

Date received at home office of Smith Incubator Co. .....

#377

(19)

RECORD COVERING GROSS SALES OF FORCED DRAFT INCUBATORS

VALUE	EGG CAPACITY	YEAR	SMITH NUMBER UNITS	SMITH VALUE	SMITH EGG CAPACITY	COMBINED SMITH AND BUCKEYE NUMBER UNITS	COMBINED SMITH AND BUCKEYE VALUE	COMBINED SMITH AND BUCKEYE EGG CAPACITY
1,740.00	Not Known					39	1,740.00	
6,382.95	" "					103	38,382.95	
3,771.33	" "					166	93,771.33	
7,718.85	" "					215	217,718.85	
0,299.41	1,435,152					256	270,299.41	1,435,152
4,497.13	4,470,384	1922	60	437,500.00	2,620,000	617	1,141,997.13	7,290,384
5,847.66	5,737,248	1923	84	564,000.00	3,948,000	791	1,309,847.66	9,685,248
3,017.75	6,059,052	1924	79	538,720.00	3,713,000	924	1,331,737.75	9,772,052
7,399.49	10,879,332	1925	143	918,930.00	6,721,000	1,301	2,176,329.49	17,600,332
0,042.13	15,839,700	1926	321	2,106,051.00	15,087,000	1,890	3,286,093.13	30,926,700
5,432.26	18,755,208	1927	327	2,162,479.50	15,369,000	1,777	3,957,911.76	31,824,208
9,084.44	6,069,388	1928	170	1,125,321.00	8,615,000	783	1,795,305.44	14,684,388
2,227.27	12,724,368	1929	345	2,179,453.50	16,928,000	1,385	3,491,680.77	29,652,368
3,783.77	7,778,412	1930	264	1,615,900.25	12,653,000	883	2,448,684.02	20,438,412
7,416.36	9,932,610	1931	59	385,713.50	2,738,000	822	1,363,131.86	12,670,810
5,844.78	1,066,614	1932	33	179,015.50	1,501,200	181	354,860.26	1,567,614
8,987.56	98,247,728		1,885	12,213,084.25	90,030,000	12,113	23,940,071.81	188,337,728

32 to June 30th
32 to October 31st

Plaintiff's Exhibit 19

517

RECORD COVERING GROSS SALES OF FORCED DRAFT INCUBATORS

YEAR	BUCKEYE NUMBER UNITS	BUCKEYE VALUE	BUCKEYE EGG CAPACITY	YEAR	SMITH NUMBER UNITS	SMITH VALUE	SMITH EGG CAPACITY	COMBINED SMITH AND BUCKEYE NUMBER UNITS	COMBINED SMITH AND BUCKEYE VALUE
1917	39.	1,740.00	Not Known					39	1,740.00
1918	103	38,262.95	" "					103	38,262.95
1919	166	93,771.33	" "					166	93,771.33
1920	215	217,718.85	" "					215	217,718.85
1921	236	270,239.41	1,435,152					236	270,239.41
1922	557	684,497.13	4,470,384	1922	60	437,500.00	2,820,000	617	1,121,997.13
1923	707	715,847.66	5,737,248	1923	84	584,000.00	3,948,000	791	1,309,847.66
1924	845	773,017.75	6,059,052	1924	79	528,720.00	3,713,000	924	1,301,737.75
1925	1,158	1,147,399.49	10,879,332	1925	143	928,930.00	6,721,000	1,301	2,176,329.49
1926	1,569	1,820,042.13	15,839,700	1926	321	2,106,051.00	15,087,000	1,890	3,926,093.13
1927	1,450	1,725,432.26	18,255,208	1927	327	2,162,479.50	15,369,000	1,777	3,957,911.76
1928	613	669,984.44	6,069,388	1928	170	1,125,321.00	8,615,000	783	1,795,305.44
1929	1,040	1,312,227.27	12,714,368	1929	345	2,179,453.50	16,928,000	1,385	3,491,680.77
1930	619	835,783.77	7,778,411	1930	264	1,615,900.25	12,653,000	883	2,448,684.02
1931	763	997,416.36	9,932,610	1931	59	365,713.50	2,738,000	822	1,363,131.86
1932	148	175,844.78	1,066,814	1932	33	179,015.50	1,501,200	181	354,860.28
	10,228	11,726,987.56	98,247,728		1,885	12,215,084.25	90,090,000	12,113	23,940,071.81

Buckeye - 1932 to June 30th
Smith - 1932 to October 31st

Plaintiff's Exhibit 20 No. 719 E. 519

HATCHERY IN CONNECTION

SERVICE AND QUALITY

E. H. SNOW

Hardware and Plumbing

RECEIVED

NOV 3 1924

10-30.24

Dr. S. B. Smith,
Smith Incubator Co.,
Cleveland, Ohio.

Dear Sirs:

We have been operating a double deck incubator for sometime; in a small way last spring, we converted this into a force draft machine, with very unsatisfactory results, so we dismantled it shortly after.

As we have practically lost money on every turn of the baby chick business, it has been rather discouraging.

In accordance with your literature which we have received from you regarding your incubator users, looks good.

Up to date we have been undecided what to do, in regard to what machine to buy. Mr. Isackson with the Buckeye Co., called on us yesterday and tried to sell us a Buckeye machine.

We would like very much to own one of your machines but there is a considerable amount of money involved. Kindly cuote us your very best terms.

Also what would your charges be if we built a machine like the Smith?

Kindly let us hear from you at your earliest convenience.

With best regards.

E. H. Snow.

NOV 3 1924 10-30.24

Dr. S. B. Smith,
Smith Incubator Co.,
Cleveland, Ohio.

Dear Sirs:

We have been operating a double deck incubator for sometime; in a small way last spring, we converted this into a force draft machine, with very unsatisfactory results, so we dismantled it shortly after.

As we have practically lost money on every turn of the baby chick business, it has been rather discouraging.

In accordance with your literature which we have received from you regarding your incubator users, looks good.

Up to date we have been undecided what to do, in regard to what machine to buy. Mr. Isackson with the Buckeye Co., called on us yesterday and tried to sell us a Buckeye machine.

We would like very much to own one of your machines but there is a considerable amount of money involved. Kindly cuote us your very best terms.

Also what would your charges be if we built a machine like the Smith?

Kindly let us hear from you at your earliest convenience.

With best regards.

E. B. Snow.

Lennox Torrid Zone Furnaces

Plaintiff's Exhibit 21

No. 3114 Eq

Nov. 4th, 1924.

Mr. E. H. Snow,
Sleepy Eye, Minn.

My dear Mr. Snow:

cy made for our files
11/14/32 GMS

Yours 30th ult. at hand. It just so happens that our Minnesota representative, Mr. T. A. Vesper, is in Minnesota this week and we are arranging to have him call upon you and explain thoroughly our proposition. The price of our machine today (Nov. 4th) is $6442.00. The terms are $3000.00 cash with order, one note for $1721.00 due next May and one note for $1721.00 due next June. Our delivery schedule is fast filling up and we should like to ask you to favor us by placing the orier as early as possible if you decide to increase with a Smith this year.

Regarding your inquiry about what our charges would be if you built a machine like the Smith would state that this would involve the patents and for that reason we could not permit it to be done. For your information will state that several people have built their own machines but upon finding that they had infringed the patents they have torn their machines down and in most cases have replaced them with Smiths.

Yours very truly,

SMITH INCUBATOR COMPANY

Nov. 4th, 1924.

Mr. E. H. Snow,
Sleepy Eye, Minn.

My dear Mr. Snow:

cy made for our files
11/14/32 GMS

Yours 30th ult. at hand. It just so happens that our Minnesota representative, Mr. T. A. Vesper, is in Minnesota this week and we are arranging to have him call upon you and explain thoroughly our proposition. The price of our machine today (Nov. 4th) is $6442.00. The terms are $3000.00 cash with order, one note for $1721.00 due next May and one note for $1721.00 due next June. Our delivery schedule is fast filling up and we should like to ask you to favor us by placing the order as early as possible if you decide to increase with a Smith this year.

Regarding your inquiry about what our charges would be if you built a machine like the Smith would state that this would involve the patents and for that reason we could not permit it to be done. For your information will state that several people have built their own machines but upon finding that they had infringed the patents they have torn their machines down and in most cases have replaced them with Smiths.

Yours very truly,

SMITH INCUBATOR COMPANY

C. R. JENNEY

CRJ'PMC.
CC T A Vesper

No. 8119 Eq.

DATE Nov. 14. 32

TIME 2:05 - 2:25

SHEET No 3.

...ate taken on line B B Test Diagram No 1.

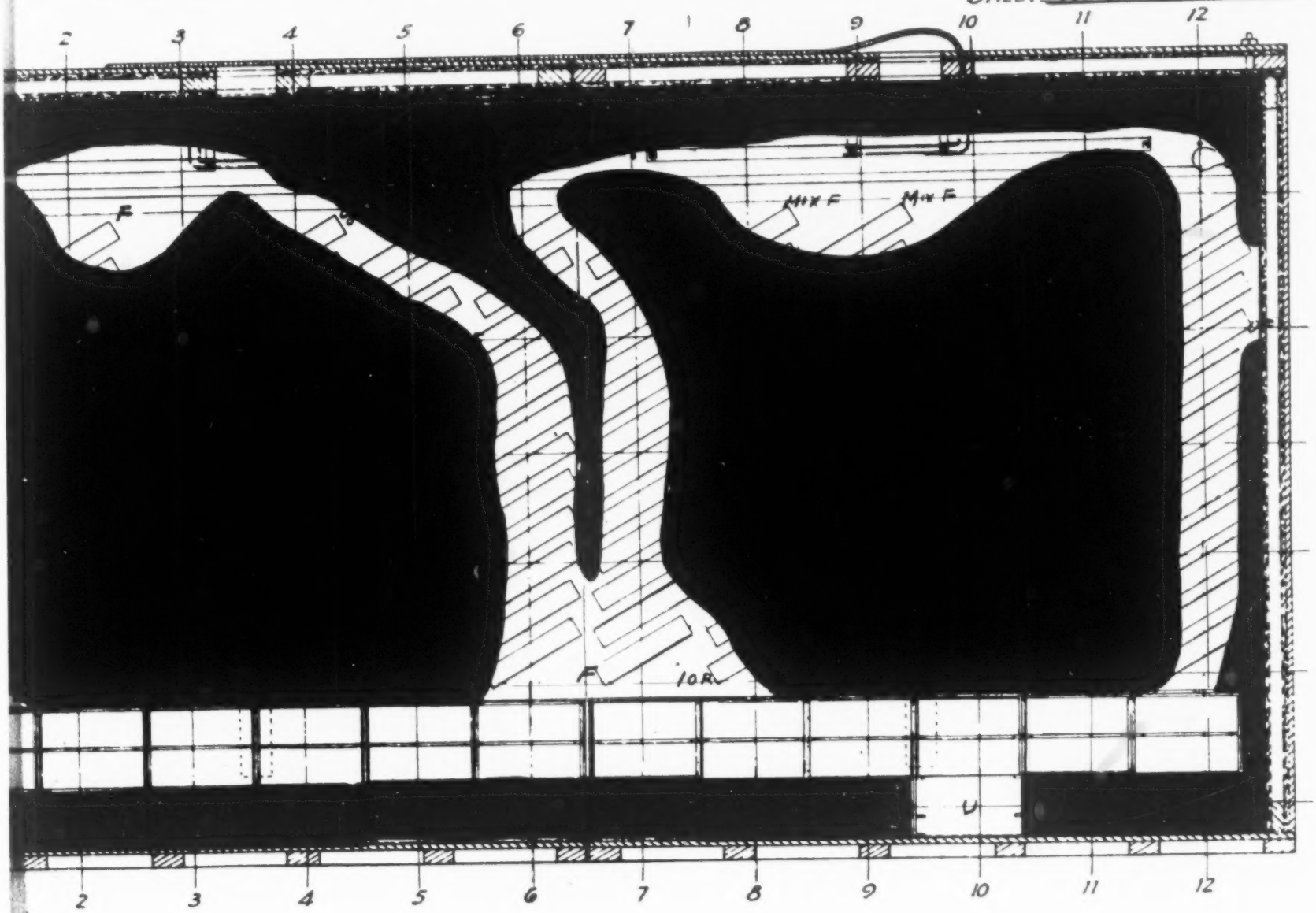

Plfs. Ex. 22

TEST DIAGRAM NO. 2

SNOW INCUBATOR

Frank B. Rowley

No 2119 Eg

DATE Nov. 14. 32

TIME 2:05 - 2:25

SHEET No 3.

Data taken on line B B Test Diagram No 1.

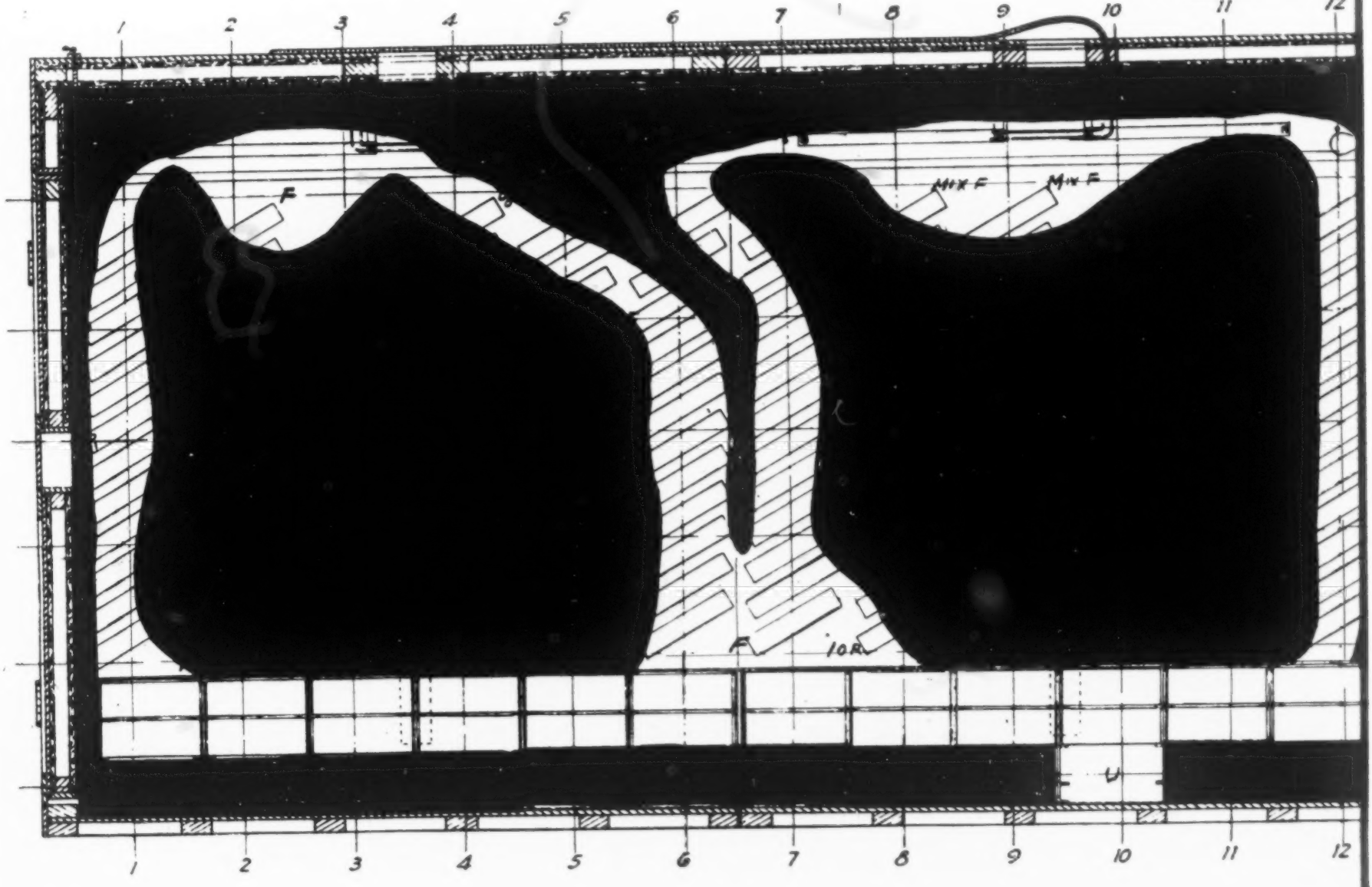

TEST DIAG

Frank B Rowley

SNOW IN

No. 3119

DATE Nov 14-32

TIME 2:00 P - 2:55

SHEET 2

ata on line D D Test Diagram No 1

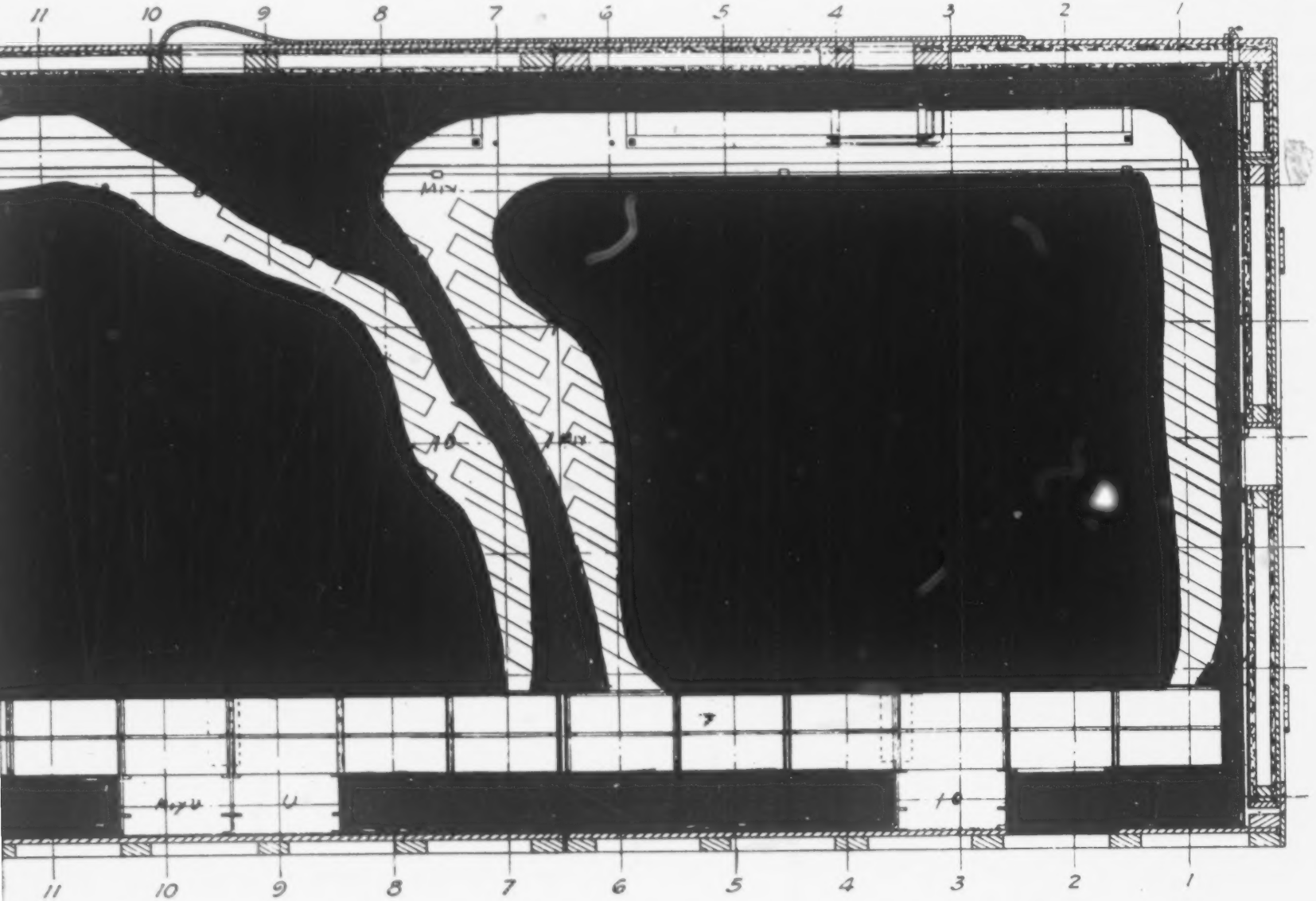

Plfs. Ex. 23

525

TEST DIAGRAM NO. 3

SNOW INCUBATOR

Frank B Rooley

Data on line DD Test Diagram No 1

DATE Nov 4 32

TIME 2:08 - 25

SHEET 2

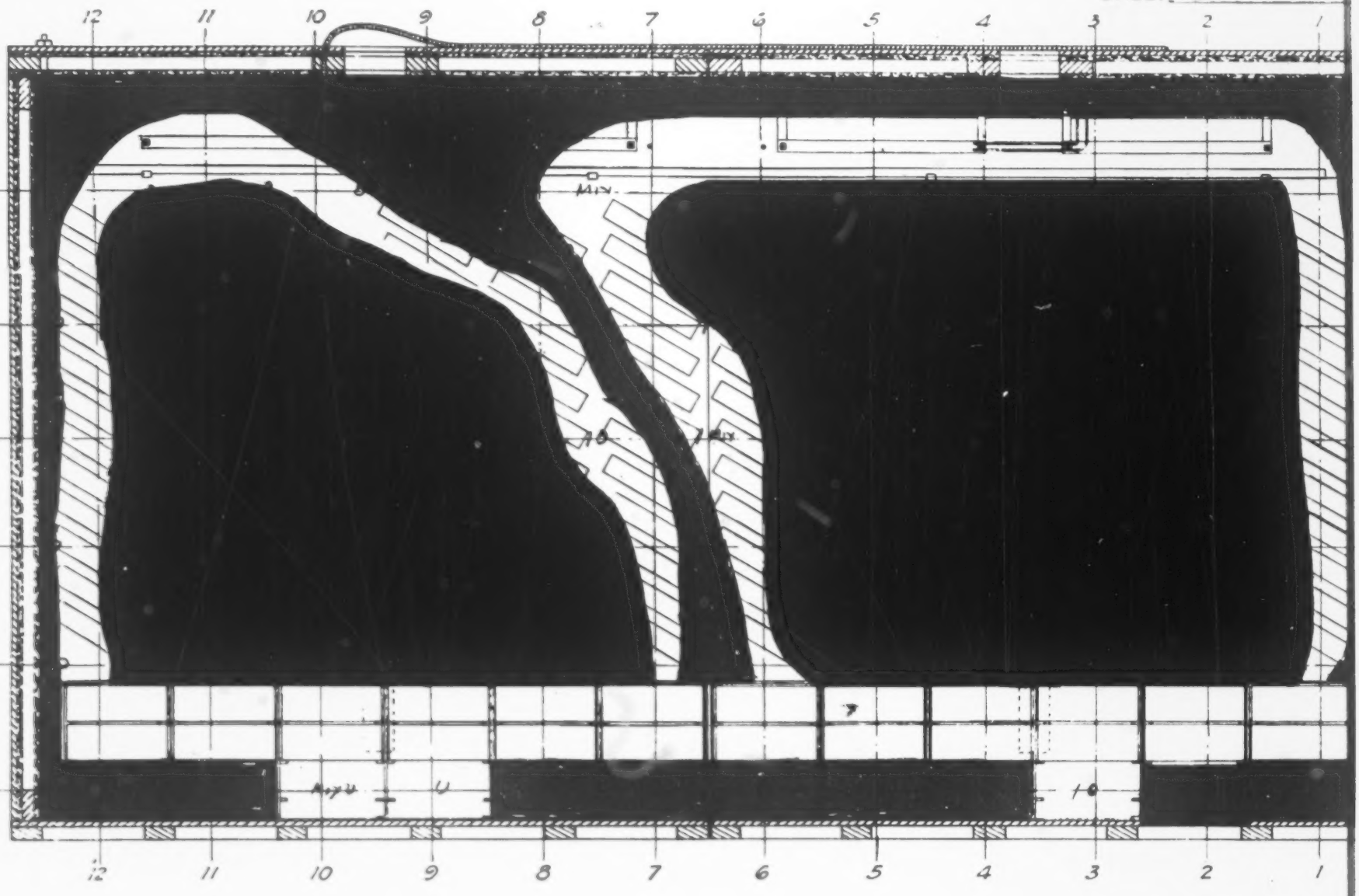

TEST DIAG

Frank B Baxley SNOW IN

708 Plaintiff's Exhibit.
No. 14 (Model).
To Be Treated And Dealt
With Under Provisions Of
C. C. A. Rule 34.

FOLD OUTS NOT INCLUDED

740 Defendant's Exhibit
O (Certified Copy
Of File Wrapper)
To Be Treated And Dealt With
Under Provisions Of C. C. A.
Rule 34.

Memorandum of Clerk of U. S. Circuit Court of Appeals:

The above exhibit was later certified to the Circuit Court of Appeals and a copy thereof will be found at the end of this printed record.

741 (Defendants' Exhibit P, Letters Patent No. 120,253 to H. Endemann, October 24, 1871.)

594

H. ENDEMANN.

Improvement in Apparatus for Drying Fruits, Meat, &c

No. 120,253. Patented Oct. 24, 1871.

Fig. 1.

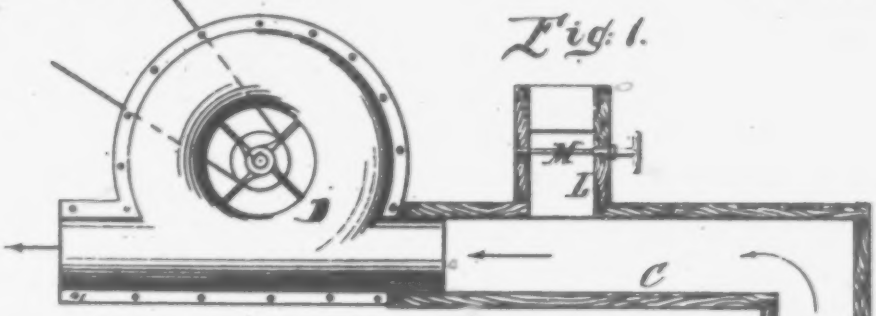

Fig. 2.

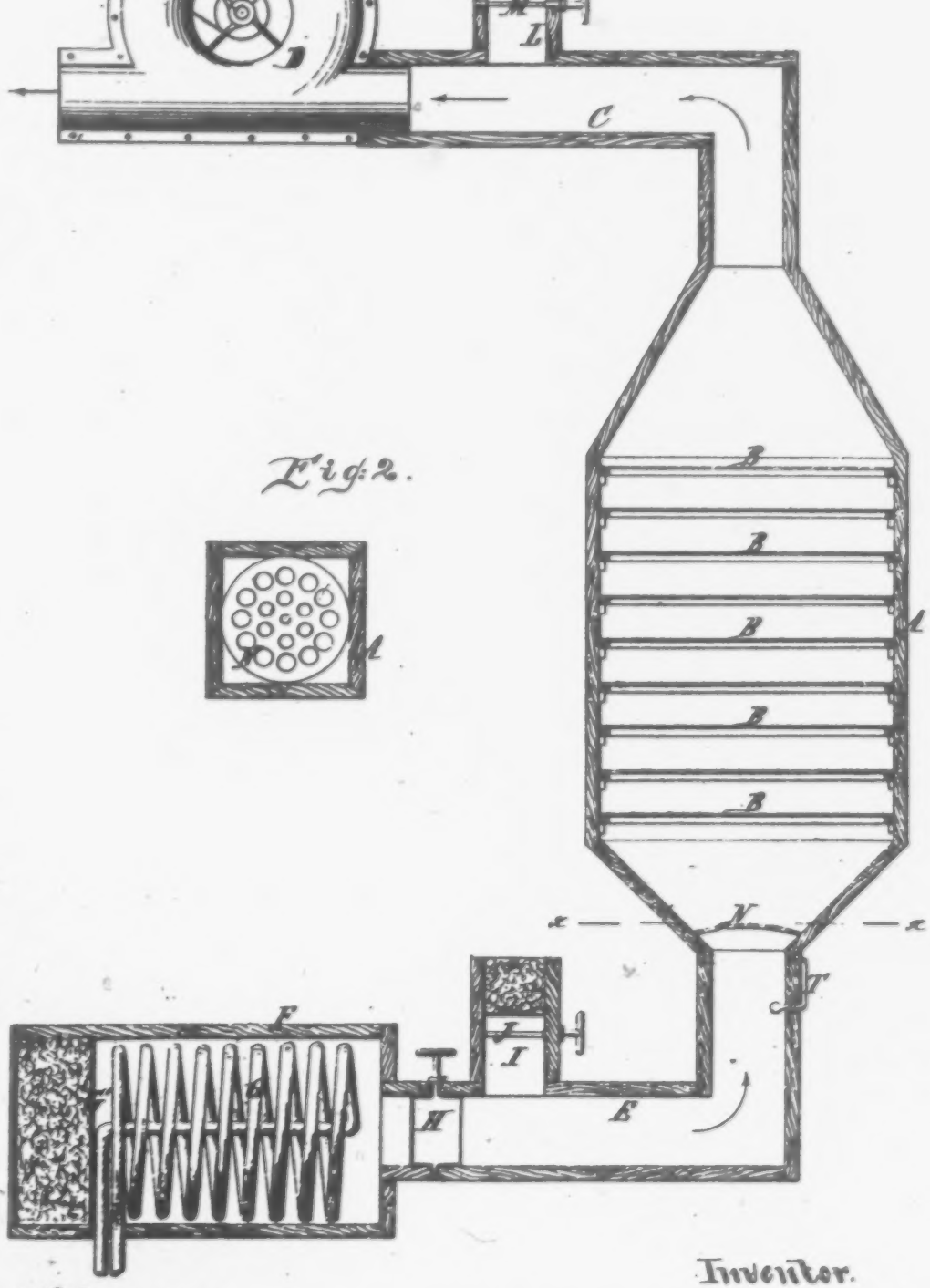

Witnesses.

Inventor.

UNITED STATES PATENT

HERMANN ENDEMANN, OF NEW YORK, N

IMPROVEMENT IN APPARATUS FOR DRYING FRUI

Specification forming part of Letters Patent No. 120,253, dated Oct

To all whom it may concern:

Be it known that I, HERMANN ENDEMANN, of the city, county, and State of New York, have invented a new and Improved Drying Apparatus; and I do hereby declare the following to be a full, clear, and exact description thereof, which will enable those skilled in the art to make and use the same, reference being had to the accompanying drawing, forming part of this specification, in which drawing—

Figure 1 represents a vertical section of this apparatus. Fig. 2 is a horizontal section of the same in the plane *x x*, Fig. 1.

Similar letters indicate corresponding parts.

This invention consists in the combination of a drying-room containing shelves or trays for the reception of the articles to be dried, with an air-heater, with an air-exhauster, and with suitable valves in the pipe leading into and out of the drying-chamber in such a manner that, by the action of said air-exhauster, a current of hot air can be drawn through the drying-chamber, and by opening the valves in the air or discharge-pipes the temperature of the air passing through the drying-chamber can be regulated with the greatest accuracy.

In the drawing, A designates a chamber, which may be made of wood lined with sheet metal or of any other suitable bad conductor of heat, and which is provided with ribs or lugs to support a series of shelves or platforms, B, so constructed that they can be readily removed from or inserted in the drying-chamber, said chamber being provided with a door to give convenient access to its interior. The platforms or trays are composed of frames supporting bottoms of wire-netting or perforated sheet metal, and on them are spread the articles to be dried. From the top of the drying-chamber extends a pipe, C, which connects with an air-exhauster, D, of any suitable construction, and from the bottom of said drying-chamber extends a pipe, E, to a chamber, F, which contains a steam-coil, G. The mouth of the air-chamber F is covered by a sieve, G′, which supports a quantity of loose cotton, so that the air passing in said air-chamber is freed from impurities. In the air-supply pipe E is situated a damper, H, to close the same, and from said pipe rises a nozzle, I, furnished with a valve, J, and protected by a quantity of loose cotton resting on a sieve, K. From the exhaust-pipe C extends a nozzle, L, provided w
the junction of the ai
ing-chamber is placed
lar, while the transv
chamber is square, a
perforations of the si
and they increase gra
ference. By this arra
passing in from the
evenly distributed th
ber. A thermometer
pipe allows of observ
air passing up into th

When the air-exhau
rent of air is caused t
ber F, where the same
tact with the steam-c
ed air passes up throu
air is freed from its
the mouth of the air-c
to reduce the temper
in the supply-pipe E
a quantity of cold air
that has passed the
to increase the tempe
ing-chamber, the val
opened; and thereby
through the steam-c
quently its temperat

In using my appa
where the temperatu
above 140° Fahrenh
the following proport
one-half inch pipe, p
pressure through it,
to such a length that
heating-surface for ev
through the same pe
the capacity of the
eight cubic feet and
teen cubic feet of air
face of the steam-coil
feet.

In some cases I ha
place the exhauster
chamber and the st
dry with a downwar
case the temperatur
above 125°, since air
not be made to tra
current except by a r

H. ENDEMANN.

Improvement in Apparatus for Drying Fruits, Meat, &c.

No. 120,253. Patented Oct. 24, 1871.

Fig. 1.

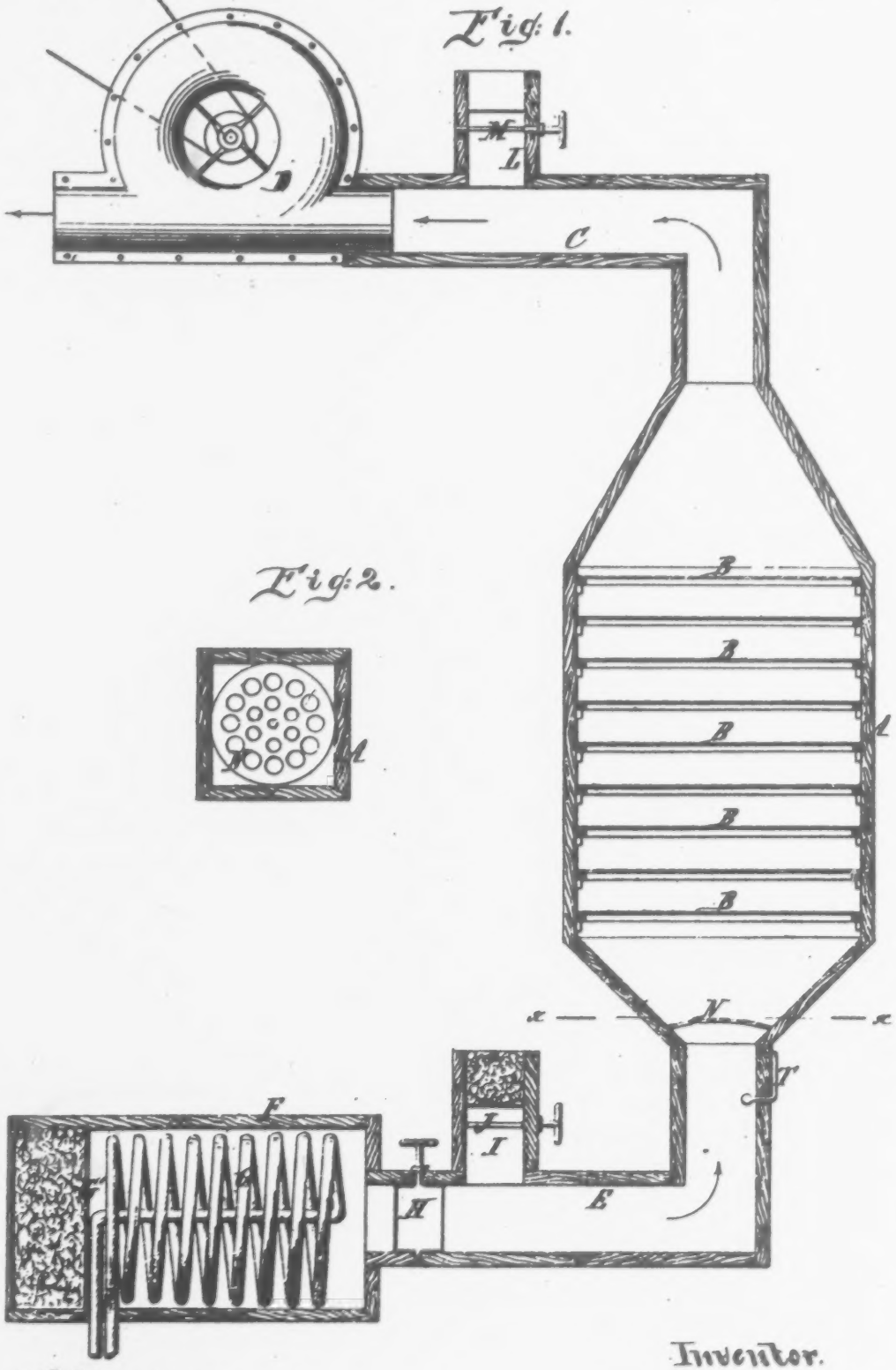

Fig. 2.

Witnesses.

C. Wahlert.

E. Bilhuber

Inventor.

H. Endemann

UNITED STATES PATENT

HERMANN ENDEMANN, OF NEW YORK, N

IMPROVEMENT IN APPARATUS FOR DRYING FRUIT

Specification forming part of Letters Patent No. 120,253, dated Octo

To all whom it may concern:

Be it known that I, HERMANN ENDEMANN, of the city, county, and State of New York, have invented a new and Improved Drying Apparatus; and I do hereby declare the following to be a full, clear, and exact description thereof, which will enable those skilled in the art to make and use the same, reference being had to the accompanying drawing, forming part of this specification, in which drawing—

Figure 1 represents a vertical section of this apparatus. Fig. 2 is a horizontal section of the same in the plane *x x*, Fig. 1.

Similar letters indicate corresponding parts.

This invention consists in the combination of a drying-room containing shelves or trays for the reception of the articles to be dried, with an air-heater, with an air-exhauster, and with suitable valves in the pipe leading into and out of the drying-chamber in such a manner that, by the action of said air-exhauster, a current of hot air can be drawn through the drying-chamber, and by opening the valves in the air or discharge-pipes the temperature of the air passing through the drying-chamber can be regulated with the greatest accuracy.

In the drawing, A designates a chamber, which may be made of wood lined with sheet metal or of any other suitable bad conductor of heat, and which is provided with ribs or lugs to support a series of shelves or platforms, B, so constructed that they can be readily removed from or inserted in the drying-chamber, said chamber being provided with a door to give convenient access to its interior. The platforms or trays are composed of frames supporting bottoms of wire-netting or perforated sheet metal, and on them are spread the articles to be dried. From the top of the drying-chamber extends a pipe, C, which connects with an air-exhauster, D, of any suitable construction, and from the bottom of said drying-chamber extends a pipe, E, to a chamber, F, which contains a steam-coil, G. The mouth of the air-chamber F is covered by a sieve, G′, which supports a quantity of loose cotton, so that the air passing in said air-chamber is freed from impurities. In the air-supply pipe E is situated a damper, H, to close the same, and from said pipe rises a nozzle, I, furnished with a valve, J, and protected by a quantity of loose cotton resting on a sieve, K. From the exhaust-pipe C extends a nozzle, L, provided w
the junction of the ai
ing-chamber is placed
lar, while the transv
chamber is square, as
perforations of the si
and they increase gr
ference. By this arra
passing in from the
evenly distributed th
ber. A thermometer
pipe allows of observi
air passing up into th

When the air-exhau
rent of air is caused t
ber F, where the same
tact with the steam-c
ed air passes up throu
air is freed from its
the mouth of the air-c
to reduce the temper
in the supply-pipe E
a quantity of cold air
that has passed the
to increase the tempe
ing-chamber, the val
opened; and thereby
through the steam-c
quently its temperat

In using my appa
where the temperatu
above 140° Fahrenh
the following proport
one-half inch pipe,
pressure through it,
to such a length that
heating-surface for ev
through the same pe
the capacity of the
eight cubic feet and
teen cubic feet of air
face of the steam-coil
feet.

In some cases I ha
place the exhauster
chamber and the st
dry with a downwar
case the temperature
above 125°, since air
not be made to tra
current except by a r

H. ENDEMANN.

n Apparatus for Drying Fruits, Meat, &c.

Patented Oct. 24, 1871.

Fig. 1.

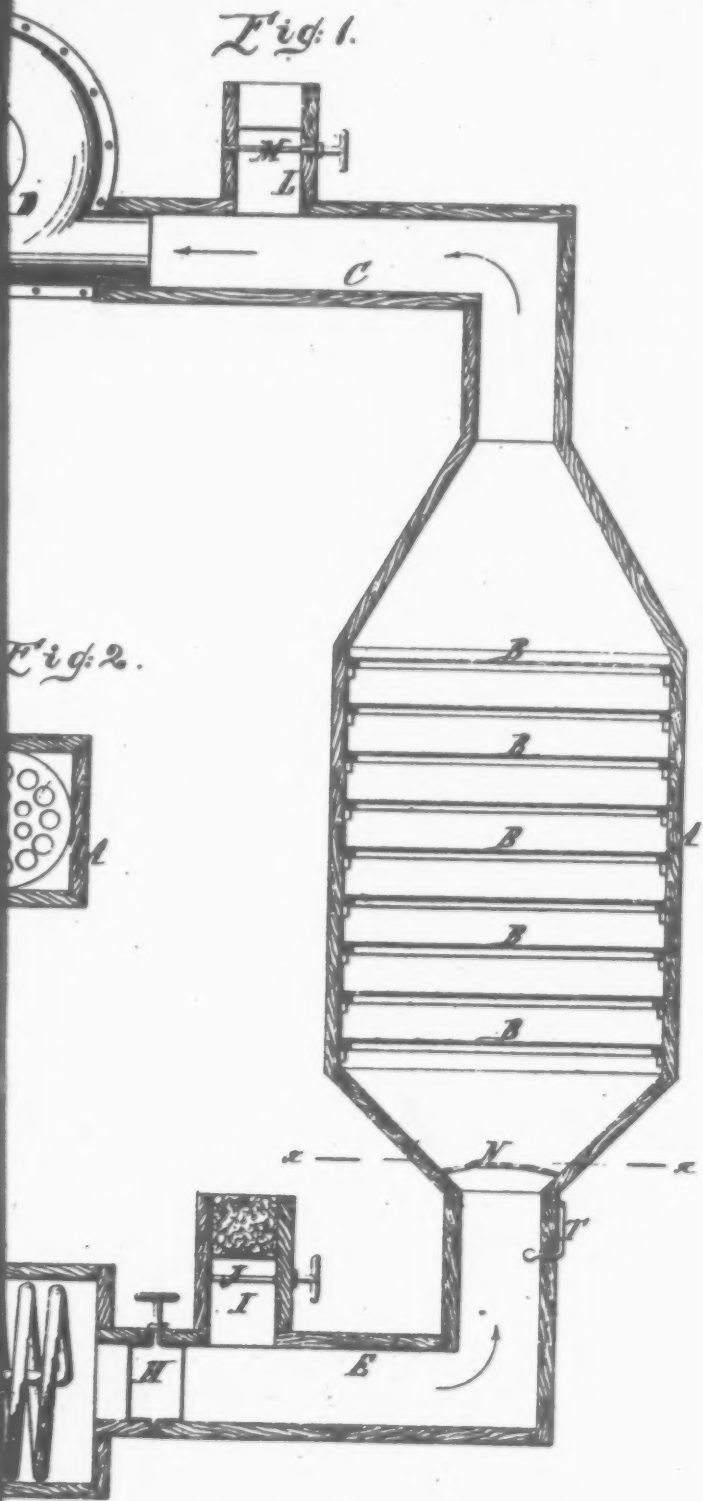

Fig. 2.

Inventor.

UNITED STATES PATENT OFFICE

HERMANN ENDEMANN, OF NEW YORK, N. Y.

IMPROVEMENT IN APPARATUS FOR DRYING FRUITS, MEATS, &c.

Specification forming part of Letters Patent No. 120,253, dated October 24, 1871.

To all whom it may concern:

Be it known that I, HERMANN ENDEMANN, of the city, county, and State of New York, have invented a new and Improved Drying Apparatus; and I do hereby declare the following to be a full, clear, and exact description thereof, which will enable those skilled in the art to make and use the same, reference being had to the accompanying drawing, forming part of this specification, in which drawing—

Figure 1 represents a vertical section of this apparatus. Fig. 2 is a horizontal section of the same in the plane *x x*, Fig. 1.

Similar letters indicate corresponding parts.

This invention consists in the combination of a drying-room containing shelves or trays for the reception of the articles to be dried, with an air-heater, with an air-exhauster, and with suitable valves in the pipe leading into and out of the drying-chamber in such a manner that, by the action of said air-exhauster, a current of hot air can be drawn through the drying-chamber, and by opening the valves in the air or discharge-pipes the temperature of the air passing through the drying-chamber can be regulated with the greatest accuracy.

In the drawing, A designates a chamber, which may be made of wood lined with sheet metal or of any other suitable bad conductor of heat, and which is provided with ribs or lugs to support a series of shelves or platforms, B, so constructed that they can be readily removed from or inserted in the drying-chamber, said chamber being provided with a door to give convenient access to its interior. The platforms or trays are composed of frames supporting bottoms of wire-netting or perforated sheet metal, and on them are spread the articles to be dried. From the top of the drying-chamber extends a pipe, C, which connects with an air-exhauster, D, of any suitable construction, and from the bottom of said drying-chamber extends a pipe, E, to a chamber, F, which contains a steam-coil, G. The mouth of the air-chamber F is covered by a sieve, G′, which supports a quantity of loose cotton, so that the air passing in said air-chamber is freed from impurities. In the air-supply pipe E is situated a damper, H, to close the same, and from said pipe rises a nozzle, I, furnished with a valve, J, and protected by a quantity of loose cotton resting on a sieve, K. From the exhaust-pipe C extends a nozzle, L, provided with a valve, M. Just above the junction of the air-supply pipe with the drying-chamber is placed a sieve, N, which is circular, while the transverse section of the drying-chamber is square, as shown in Fig. 2, and the perforations of the sieve are small in the center and they increase gradually toward the circumference. By this arrangement the current of air passing in from the supply-pipe is spread and evenly distributed throughout the drying-chamber. A thermometer, T, inserted in the supply-pipe allows of observing the temperature of the air passing up into the drying-chamber.

When the air-exhauster is set in motion a current of air is caused to pass through the air-chamber F, where the same is heated by coming in contact with the steam-coil and this current of heated air passes up through the drying-chamber. This air is freed from its impurities by the cotton in the mouth of the air-chamber F. If it is desired to reduce the temperature of the air the valve J in the supply-pipe E is opened, and consequently a quantity of cold air will be mixed with the air that has passed the steam-coil. If it is desired to increase the temperature of the air in the drying-chamber, the valve M in the exhaust-pipe is opened; and thereby the speed of the air passing through the steam-coil is reduced, and consequently its temperature is raised.

In using my apparatus in desiccating meat, where the temperature of the air must not rise above 140° Fahrenheit, I construct the same in the following proportions: I make a steam-coil of one-half inch pipe, pass steam of forty pounds, pressure through it, and extend said steam-coil to such a length that I obtain two square feet of heating-surface for every cubic foot of air passing through the same per minute. For instance, if the capacity of the drying-chamber is twenty-eight cubic feet and the exhauster takes off fourteen cubic feet of air per minute, the heating-surface of the steam-coil must be twenty-eight square feet.

In some cases I have found it of advantage to place the exhauster at the bottom of the drying-chamber and the steam-coil at the top, so as to dry with a downward current of air; but in this case the temperature of the air cannot be raised above 125°, since air of a higher temperature cannot be made to travel downward in a uniform current except by a regular exhaust-pump. It is

obvious that for a steam-coil any other suitable air-heating apparatus can be substituted.

With my apparatus, constructed as above described, I am enabled to dry beef or other meat in three hours so that it can be packed and preserved for a long time.

What I claim as new, and desire to secure by Letters Patent, is—

The combination of an air-exhauster and an air-heating apparatus with a drying-chamber and with valves J M, which allow of regulating the temperature of the air made to pass through the drying-chamber by the action of the exhauster, substantially as herein shown and described.

H. ENDEMANN.

Witnesses:
H. P. ALLEN,
WILLIAM ROBERTS.

(48)

745 (Defendants' Exhibit P, Letters Patent
E. A. Jones and C. W. Jones, June 30, 1

ny other suitable
ubstituted.
ucted as above de-
beef or other meat
e packed and pre-

desire to secure by

-exhauster and an

air-heating apparatus with a drying-chamber and with valves J M, which allow of regulating the temperature of the air made to pass through the drying-chamber by the action of the exhauster, substantially as herein shown and described.

H. ENDEMANN.

Witnesses:
H. P. ALLEN,
WILLIAM ROBERTS.

(48)

745 (Defendants' Exhibit P, Letters Patent No. 152,644 to E. A. Jones and C. W. Jones, June 30, 1874.)

598

2 Sheets--Sheet 2.

E. A. JONES & C. W. JONES.

Fruit-Driers.

No. 152,644.

Patented June 30, 1874.

Fig. 3.

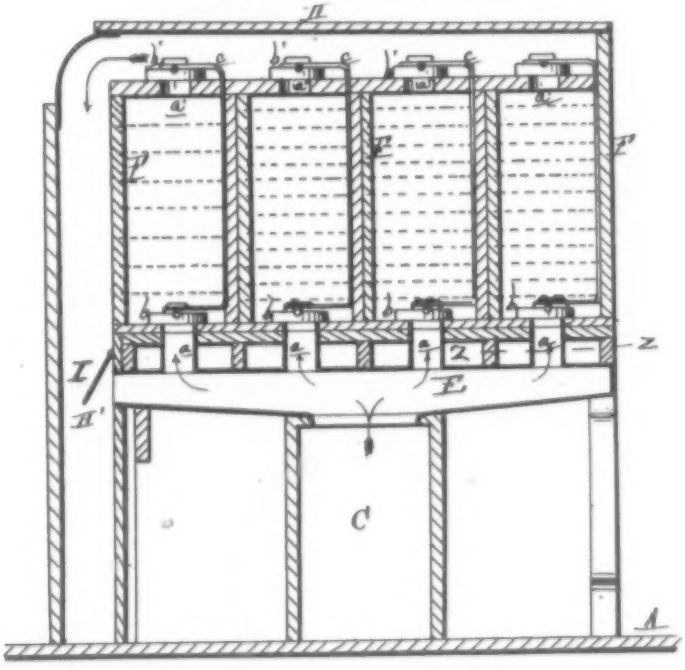

Fig. 4.

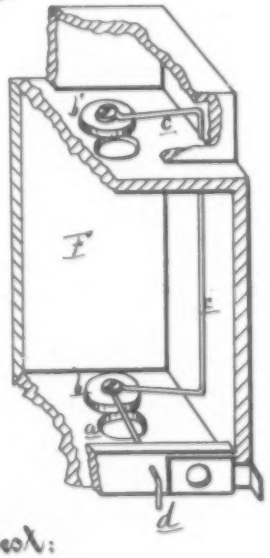

Fig. 5.

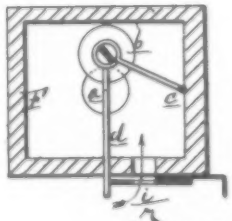

Witnesses:
W. W. Sprague
Ed. Barthel

Inventors:
E. A. Jones
C. W. Jones
By Attorney
Thos. S. Sprague

600

2 Sheets--Sheet 1.

E. A. JONES & C. W. JONES.

Fruit-Driers.

No. 152,644. Patented June 30, 1874.

Fig. 1.

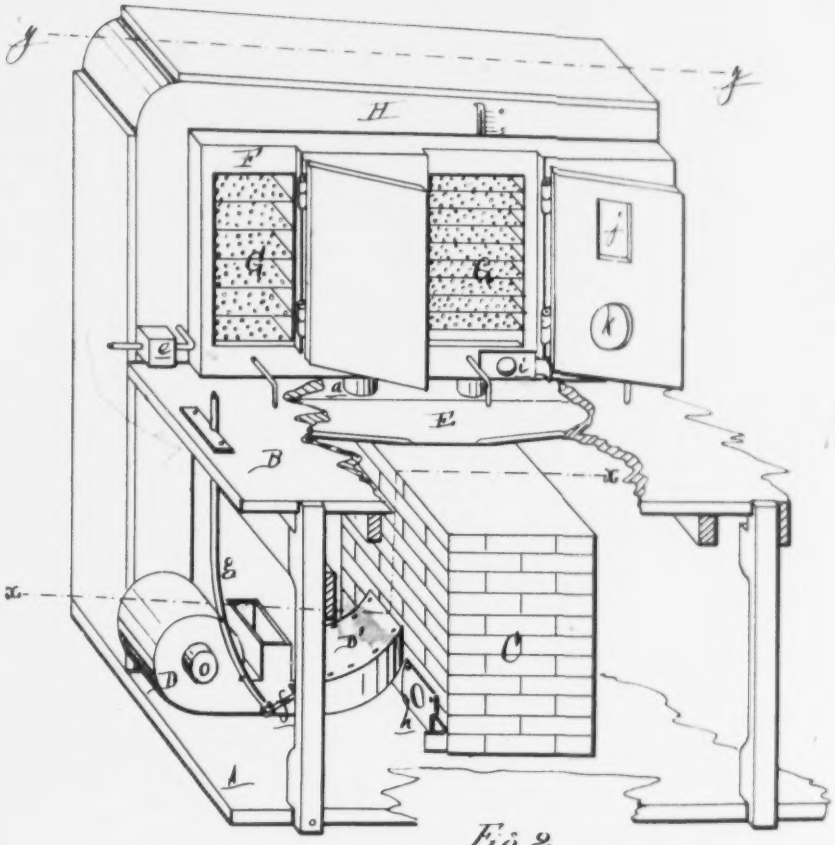

Fig. 2.

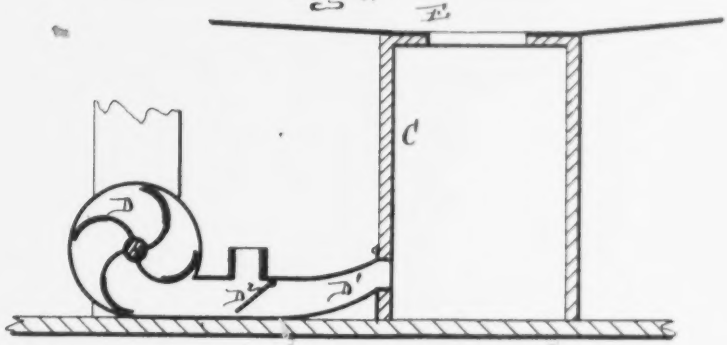

Attest:
W. W. Sprague
Ed Bartlett

Inventors:
E. A. Jones
C. W. Jones
By Attorney
Thos. S. Sprague

UNITED STATES PATENT

EDGAR A. JONES, OF STURGIS, AND CHARLES W. JONE
MICHIGAN.

IMPROVEMENT IN FRUIT-DRIERS.

Specification forming part of Letters Patent No. **132,614**, dated June 30,
May 22, 1874.

To all whom it may concern:

Be it known that we, EDGAR A. JONES, of Sturgis, and CHARLES W. JONES, of Centreville, in the county of St. Joseph and State of Michigan, have invented a certain new and useful Fruit-Drier, of which the following is a specification:

The object of our invention is to so construct and arrange a series of chambers placed side by side on the second floor of a building, each chamber being adapted to receive trays or screens containing fruit, and connected at the bottom with the air-trunk of a hot-air furnace, and at the top with a flue connected with an exhaust-fan, that the heated-air currents may be caused to circulate through the several chambers independently of each other, and back into the furnace, or be discharged into the open air, or a portion be so discharged, and the remainder be returned to the furnace, the chambers being also provided with air-valves so arranged that the temperature of each chamber may be regulated to the requirements of the matter being treated therein, regardless of the temperature of the other chambers.

Figure 1, Sheet 1, is a perspective view of our drier as erected in a building, a portion of which is shown in section. Fig. 2 is a longitudinal vertical section of the blower and trunk at *x x*. Fig. 3, Sheet 2, is a vertical transverse sectional elevation at *y y*. Fig. 4 is a sectional perspective view of a drying-chamber, showing the arrangement of its valves. Fig. 5 is a horizontal section at *z z*, showing the cold-air inlet and regulating-slide.

In the drawing, A represents the basement, and B the first or any other [illegible] above it in a building. C is an air-heating furnace of suitable construction, with which is connected the blast-pipe D^1 of an exhaust-fan, D, driven from any convenient source of power. E is a hot-air trunk, communicating with the top of the furnace. F are chambers entirely disconnected from each other, although placed side by side. The trunk E communicates with the bottom of each chamber through a short pipe, *a*. G are fruit trays or screens of wire-cloth

port the fruit or vege
trays are supported,
cleats, or in grooves i
bers, in the top of ea
a', for the heated-air
or less charged with
pivoted by a central
lower arm of a C-sha
vertical arm is jour
side of the chamber.
oted a valve, *b'*, both
ously operated by a
the pivot of the lower
an opening in the fro
an exhaust-trunk, w
top of all the chamber
eral openings *a'* and
is closed, while the o
to communicate with
intersected, however,
hot-air trunk E, whic
ing flap-valve, I, whos
with a sliding weight
valve will be presentl
pipe D^1 of the fan is
valve, D^2, whose cran
rod, *g*, passing up thr
above, by opening wl
by cuts off the blast f
and vapors are exhau
by the fan, and disch
By closing the valve
the whole volume of t
chambers may be retu
be again circulated th
bers after being raised
by economizing in th
the air.

The valves *b b'* peru
cut off from the circula
terfering with any ot
should so happen that
cut off at the same ti
chambers were in use,
the trunk E would op
the whole or a part of
tion circulate through
and into the furnace a

2 Sheets--Sheet 1.

E. A. JONES & C. W. JONES.

Fruit-Driers.

Patented June 30, 1874.

Fig 1.

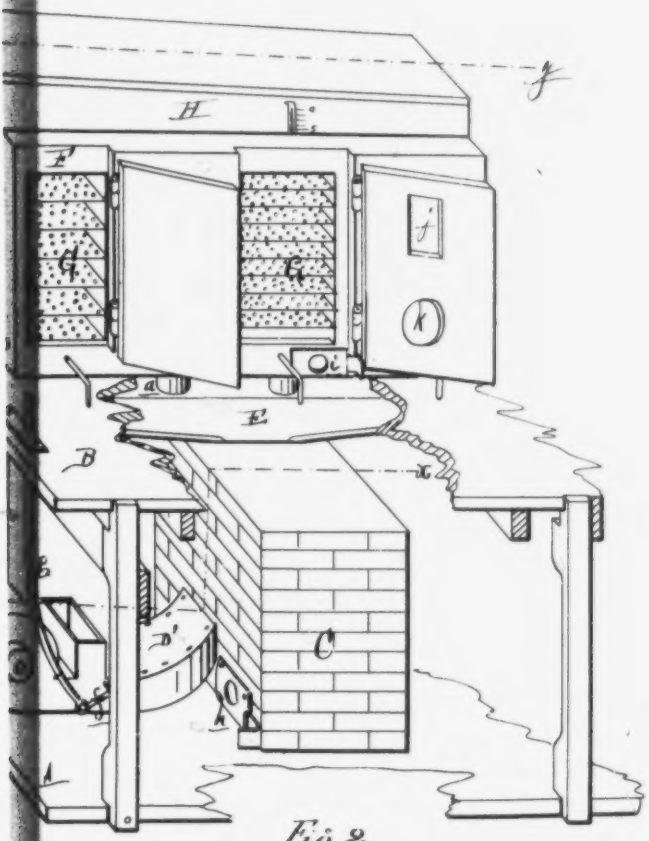

Fig 2.

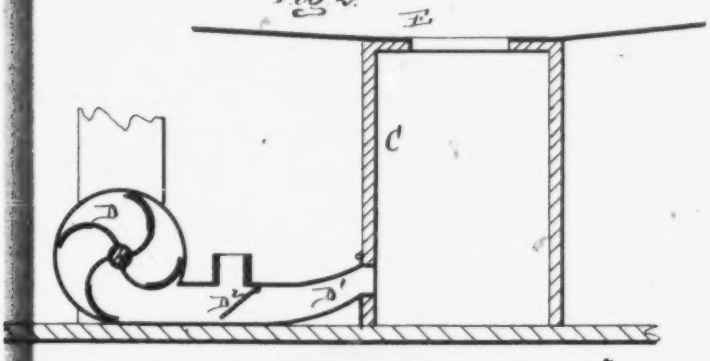

Inventors:
E. A. Jones
C. W. Jones
By Attorney
Thos. S. Sprague

UNITED STATES PATENT OFFICE.

EDGAR A. JONES, OF STURGIS, AND CHARLES W. JONES, OF CENTREVILLE, MICHIGAN.

IMPROVEMENT IN FRUIT-DRIERS.

Specification forming part of Letters Patent No. **152,644**, dated June 30, 1874; application filed May 22, 1874.

To all whom it may concern:

Be it known that we, EDGAR A. JONES, of Sturgis, and CHARLES W. JONES, of Centreville, in the county of St. Joseph and State of Michigan, have invented a certain new and useful Fruit-Drier, of which the following is a specification:

The object of our invention is to so construct and arrange a series of chambers placed side by side on the second floor of a building, each chamber being adapted to receive trays or screens containing fruit, and connected at the bottom with the air-trunk of a hot-air furnace, and at the top with a flue connected with an exhaust-fan, that the heated-air currents may be caused to circulate through the several chambers independently of each other, and back into the furnace, or be discharged into the open air, or a portion be so discharged, and the remainder be returned to the furnace, the chambers being also provided with air-valves so arranged that the temperature of each chamber may be regulated to the requirements of the matter being treated therein, regardless of the temperature of the other chambers.

Figure 1, Sheet 1, is a perspective view of our drier as erected in a building, a portion of which is shown in section. Fig. 2 is a longitudinal vertical section of the blower and trunk at *x x*. Fig. 3, Sheet 2, is a vertical transverse sectional elevation at *y y*. Fig. 4 is a sectional perspective view of a drying-chamber, showing the arrangement of its valves. Fig. 5 is a horizontal section at *z z*, showing the cold-air inlet and regulating-slide.

In the drawing, A represents the basement, and B the first or any other floor above it in a building. C is an air-heating furnace of suitable construction, with which is connected the blast-pipe D^1 of an exhaust-fan, D, driven from any convenient source of power. E is a hot-air trunk, communicating with the top of the furnace. F are chambers entirely disconnected from each other, although placed side by side. The trunk E communicates with the bottom of each chamber through a short pipe, *a*. G are fruit trays or screens of wire-cloth or other material of open texture, adapted to support the fruit or vegetables to be dried, which trays are supported, one above the other, on cleats, or in grooves in the sides of said chambers, in the top of each of which is an outlet, *a'*, for the heated-air currents, which are more or less charged with moisture. *b* is a valve, pivoted by a central stud on its top to the lower arm of a C-shaped valve-stem, *c*, whose vertical arm is journaled in a groove in one side of the chamber. To its upper arm is pivoted a valve, *b'*, both valves being simultaneously operated by a valve-rod, *d*, coupled to the pivot of the lower, and extending through an opening in the front of the chamber. H is an exhaust-trunk, which extends along the top of all the chambers, and includes their several openings *a'* and valves *b'*. At one end it is closed, while the other end, H', is dropped to communicate with the exhaust-fan, being intersected, however, by an open end of the hot-air trunk E, which is closed by a self-acting flap-valve, I, whose crank-arm is provided with a sliding weight, *e*, the purpose of which valve will be presently explained. The blast-pipe D^1 of the fan is provided with a cut-off valve, D^2, whose crank *f* is connected with a rod, *g*, passing up through a plate in the floor above, by opening which valve (which thereby cuts off the blast from the furnace) the air and vapors are exhausted from the chambers by the fan, and discharged into the open air. By closing the valve more or less, a part or the whole volume of the air drawn from the chambers may be returned into the furnace, to be again circulated through the fruit-chambers after being raised in temperature, thereby economizing in the fuel required to heat the air.

The valves *b b'* permit any chamber to be cut off from the circulating current without interfering with any other chamber; but, if it should so happen that all the chambers were cut off at the same time, or but one or two chambers were in use, the pressure of air in the trunk E would open the valve I, and let the whole or a part of the volume of air in motion circulate through the trunk H' and fan, and into the furnace again. When the circulation from the fan into the furnace is cut off

by the valve D^2, fresh air can be admitted to the furnace through an opening therein fitted with a slide, *h*.

i is a slide fitted to the front of the lower part of each chamber over an opening therein, through which cold air can be admitted to modify or temper the heat in any chamber containing articles which require to be dried at a lower temperature.

The door of each chamber is fitted with a glass, *j*, through which the condition of the contents can be observed; also, with a plate, *k*, pivoted over a hand-hole, through which a sample of the article being dried can be withdrawn without being obliged to open the entire door, and thus cool down the chamber.

What we claim as our invention, and desire to secure by Letters Patent, is—

1. The combination, with the air-heating furnace C and exhaust-fan D, of the air-trunk E and a series of independent drying-chambers, F, connected therewith and with the exhaust-trunk H H′, the said chambers being provided with the valves *b b′*, substantially in the manner and for the purpose set forth.

2. In combination, the valves *b b′*, arranged to cover the openings *a a′*, as described, the valve-stem *e*, and rod *d*, constructed and arranged substantially as described and shown.

3. The combination, with the exhaust-trunk H′ and hot-air trunk E, of the self-acting valve I, as and for the purpose set forth.

4. The combination of the valve D^2 in the blast-pipe D^1, the exhaust-fan D, the exhaust-trunk H′, and the furnace C, constructed and arranged substantially as described and shown.

EDGAR A. JONES.
CHARLES W. JONES.

Witnesses:
H. S. SPRAGUE,
W. W. SPRAGUE.

751 (Defendants' Exhibit P, Letters Patent No.
A. H. Morgan, February 20, 1883.)

be admitted to
g therein fitted

f the lower part
pening therein,
be admitted to
ny chamber con-
to be dried at a

is fitted with a
ondition of the
o, with a plate,
hrough which a
ed can be with-
to open the en-
the chamber.
tion, and desire

air-heating fur-
the air-trunk E
ying-chambers,

F, connected therewith and with the exhaust-trunk H H′, the said chambers being provided with the valves *b b′*, substantially in the manner and for the purpose set forth.

2. In combination, the valves *b b′*, arranged to cover the openings *a a′*, as described, the valve-stem *e*, and rod *d*, constructed and arranged substantially as described and shown.

3. The combination, with the exhaust-trunk H′ and hot-air trunk E, of the self-acting valve I, as and for the purpose set forth.

4. The combination of the valve D^2 in the blast-pipe D^1, the exhaust-fan D, the exhaust-trunk H′, and the furnace C, constructed and arranged substantially as described and shown.

EDGAR A. JONES.
CHARLES W. JONES.

Witnesses:
H. S. SPRAGUE,
W. W. SPRAGUE.

751 (Defendants' Exhibit P, Letters Patent No. 272,744 to A. H. Morgan, February 20, 1883.)

604 (No Model.) 2 Sheets—Sheet 1.

A. H. MORGAN.

INCUBATOR.

No. 272,744. Patented Feb. 20, 1883.

Fig. 2.

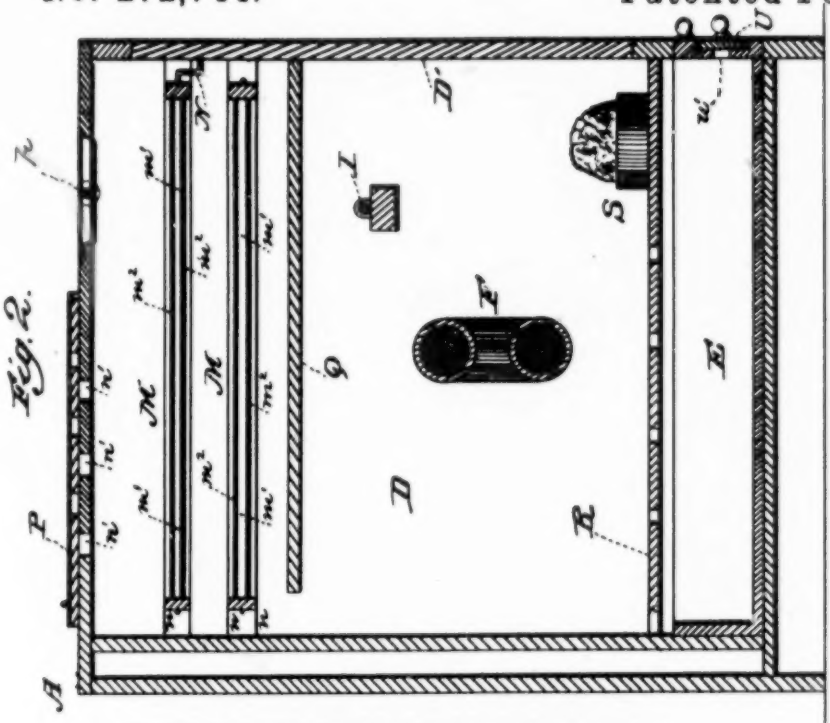

Fig. 1.

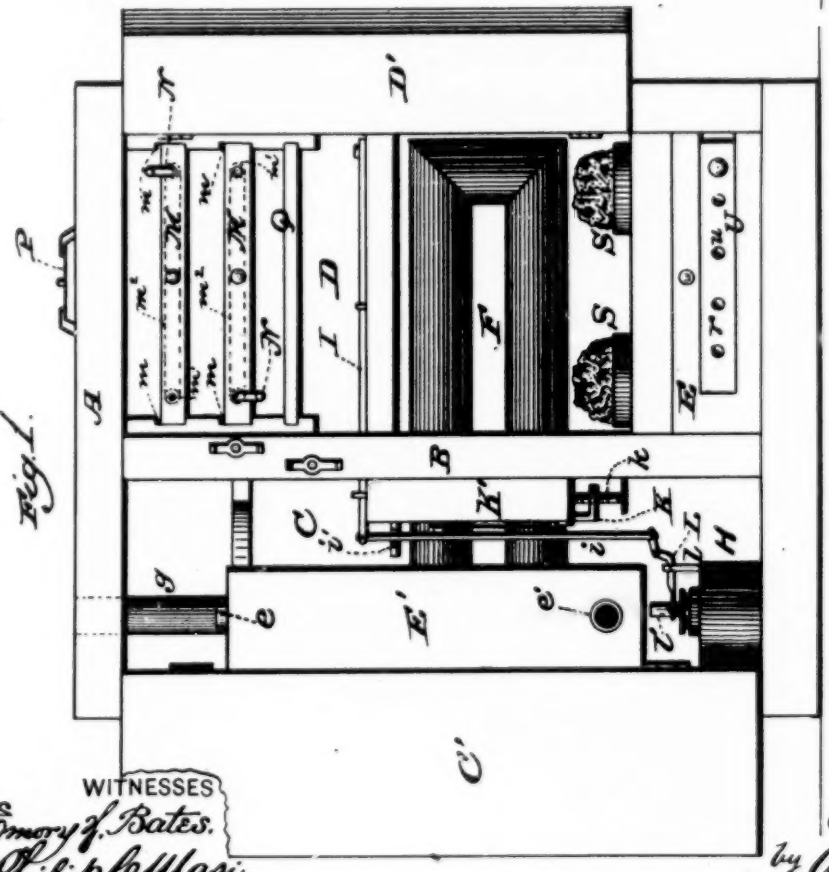

WITNESSES

Emory F. Bates.

Philip C. Masi.

INVENTOR

A. H. Morgan.

by Anderson & Smith

his ATTORNEYS

606 (No Model.) 2 Sheets—Sheet 2.

A. H. MORGAN.

INCUBATOR.

No. 272,744. Patented Feb. 20, 1883.

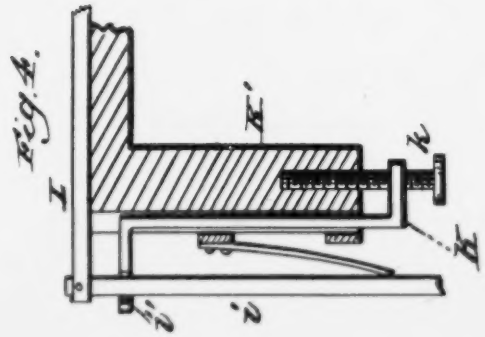

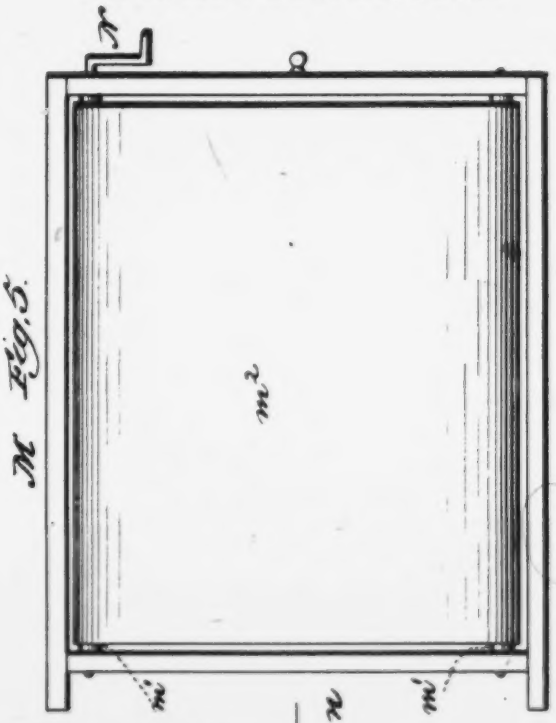

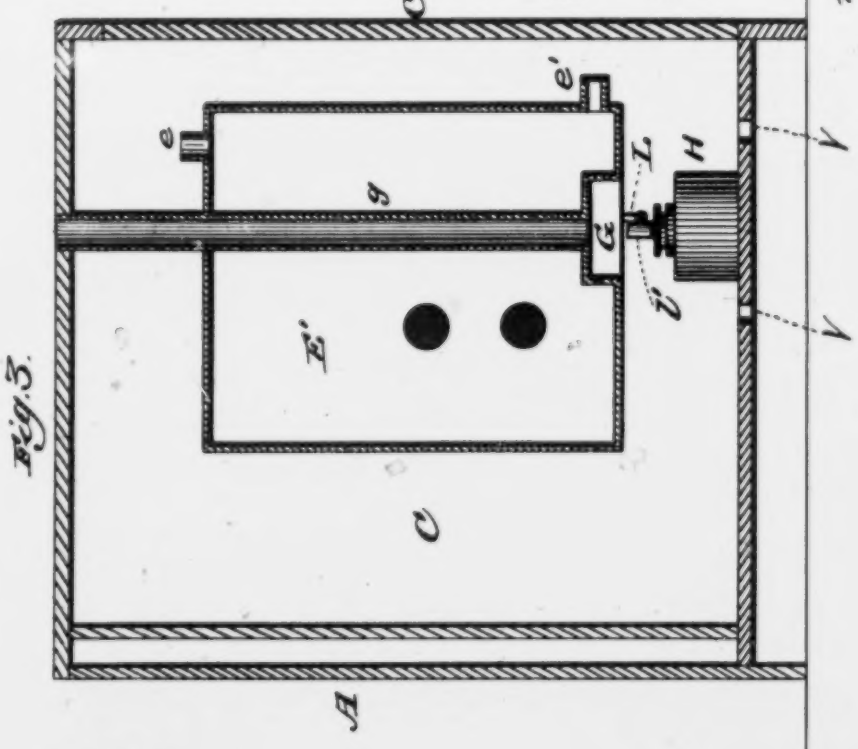

WITNESSES

Emory F. Bates.
Philip C. Masi.

INVENTOR

A. H. Morgan
by Anderson & Smith
his ATTORNEYS

UNITED STATES PATENT

ALBERT H. MORGAN, OF CRESTON, IOWA, ASSIGNOR O
JOSEPH E. BOYELS AND WILLIAM F. MORGAN, OF

INCUBATOR.

SPECIFICATION forming part of Letters Patent No. 272,744, da

Application filed July 8, 1882. (No model.)

To all whom it may concern:

Be it known that I, ALBERT H. MORGAN, a citizen of the United States, and a resident of Creston, in the county of Union and State of Iowa, have invented a new and valuable Improvement in Incubators; and I do hereby declare that the following is a full, clear, and exact description of the construction and operation of the same, reference being had to the annexed drawings, making a part of this specification, and to the letters and figures of reference marked thereon.

Figure 1 of the drawings is a front view of my incubator with the doors open. Fig. 2 is a cross-sectional view of the same, taken through the hatching-chamber D. Fig. 3 is also a cross-section, taken through the reservoir and chamber C. Fig. 4 is a detail view of the parts K′ K enlarged, and Fig. 5 is a plan view of one of the shelves.

This invention has relation to incubators; and it consists in the construction and novel arrangement of parts, as will be hereinafter fully described, and particularly pointed out in the claims appended.

The casing A is made double-walled, so as to leave an air-space between its walls, and it is divided by a vertical partition, B, into two general compartments, one of which, C, contains the water-reservoir and lamp and a portion of the temperature-regulating mechanism, while the remaining compartment, D, constitutes the incubating-chamber, which latter is subdivided near its bottom, so as to afford a compartment for the drawer E, in which latter the chickens can be placed as soon as hatched. The lamp and water-reservoir chamber C is closed by a door, C′, and the incubating-chamber D is closed by a separate door, D′.

The heating apparatus consists of a reservoir or receptacle, E′, for water, provided at the top with an inlet, *e*, and at one side, near its bottom, with an outlet, *e′*. The water-pipe F, for heating the incubating chamber, leads from the water-receptacle into the said chamber and then returns to the water-receptacle, so that a constant circulation of heated water will be maintained through the pipe. The casing of this water-receptacle has in its bottom a small recess or chamber, G, from which

ceptacle and opens a
A suitable lamp, H
chamber G, so that t
combustion will enter
pass up through the
perature within the in
ulated by the followi

I indicates a coppe
ples on a horizontal b
chamber, and secure
in. The remaining
through a slot in the
jointed to the upper e
in the lamp and w
This steel rod *i* passe
notched plate or arm
able slide, K, and is j
a lever, L, which is
ard, *l*, rising from th
turn connected with
the wick-tube. Exces
bating-chamber caus
pand, and hence as it
the lamp-chamber b
sion it will cause rod
crum or arm *i′*, and h
raise the slide on the
the flame, and thus al
to cool to the requ
K is supported by
justed by a set-scre
ing or lowering the sl
which constitutes a
steel rod, the throw o
lated. The shelves M
slide in the ways *m*, a
a rectangular frame c
upon which is stretch
of suitable fabric. O
is provided with a cra
it can be turned so as t
and thereby turn the
latter. Suitable spac
the ends of the shelv
upward circulation of
above the series of a
which can be closed b
thermometer, *p*, is arr
the casing, above the
as to indicate the te

2 Sheets—Sheet 2.

A. H. MORGAN.

INCUBATOR.

Patented Feb. 20, 1883.

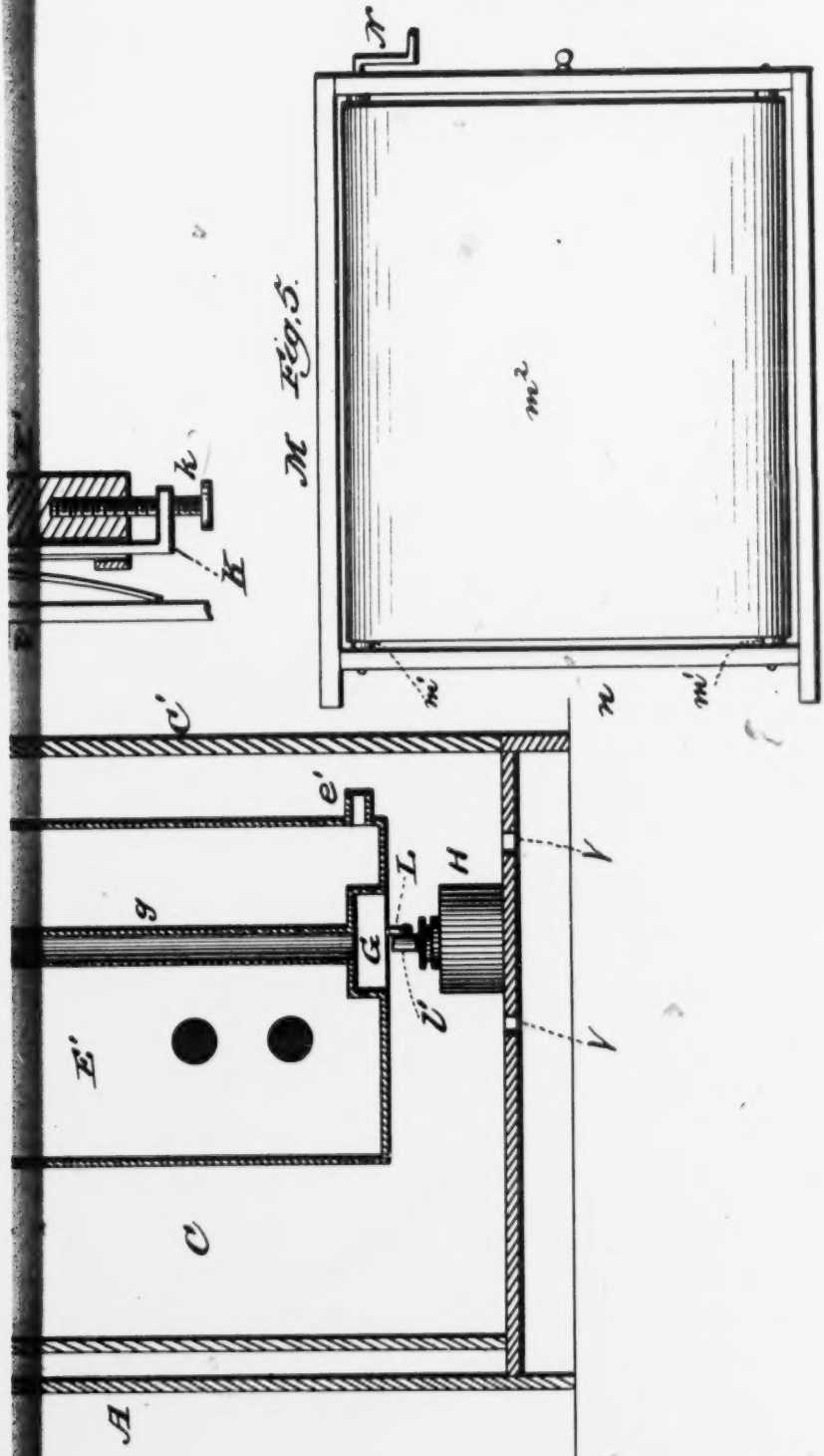

INVENTOR
A. H. Morgan
by Anderson & Smith
his ATTORNEYS

UNITED STATES PATENT OFFICE.

ALBERT H. MORGAN, OF CRESTON, IOWA, ASSIGNOR OF TWO-THIRDS TO JOSEPH E. BOYELS AND WILLIAM F. MORGAN, OF SAME PLACE.

INCUBATOR.

SPECIFICATION forming part of Letters Patent No. 272,744, dated February 20, 1883.

Application filed July 8, 1882. (No model.)

To all whom it may concern:

Be it known that I, ALBERT H. MORGAN, a citizen of the United States, and a resident of Creston, in the county of Union and State of Iowa, have invented a new and valuable Improvement in Incubators; and I do hereby declare that the following is a full, clear, and exact description of the construction and operation of the same, reference being had to the annexed drawings, making a part of this specification, and to the letters and figures of reference marked thereon.

Figure 1 of the drawings is a front view of my incubator with the doors open. Fig. 2 is a cross-sectional view of the same, taken through the hatching-chamber D. Fig. 3 is also a cross-section, taken through the reservoir and chamber C. Fig. 4 is a detail view of the parts K′ K enlarged, and Fig. 5 is a plan view of one of the shelves.

This invention has relation to incubators; and it consists in the construction and novel arrangement of parts, as will be hereinafter fully described, and particularly pointed out in the claims appended.

The casing A is made double-walled, so as to leave an air-space between its walls, and it is divided by a vertical partition, B, into two general compartments, one of which, C, contains the water-reservoir and lamp and a portion of the temperature-regulating mechanism, while the remaining compartment, D, constitutes the incubating-chamber, which latter is subdivided near its bottom, so as to afford a compartment for the drawer E, in which latter the chickens can be placed as soon as hatched. The lamp and water-reservoir chamber C is closed by a door, C′, and the incubating-chamber D is closed by a separate door, D′.

The heating apparatus consists of a reservoir or receptacle, E′, for water, provided at the top with an inlet, *e*, and at one side, near its bottom, with an outlet, *e′*. The water-pipe F, for heating the incubating chamber, leads from the water-receptacle into the said chamber and then returns to the water-receptacle, so that a constant circulation of heated water will be maintained through the pipe. The casing of this water-receptacle has in its bottom a small recess or chamber, G, from which a vertical pipe, *g*, passes up through the receptacle and opens at the top of the casing A. A suitable lamp, H, is located below the chamber G, so that the heat and products of combustion will enter said chamber, and thence pass up through the pipe or flue *g*. The temperature within the incubating-chamber is regulated by the following devices:

I indicates a copper rod, maintained by staples on a horizontal bar within the incubating-chamber, and secured at one of its ends therein. The remaining end of the rod passes through a slot in the vertical partition, and is jointed to the upper end of a vertical rod within the lamp and water-reservoir chamber. This steel rod *i* passes through the horizontal notched plate or arm *i′* of a vertically-adjustable slide, K, and is jointed at its lower end to a lever, L, which is fulcrumed upon a standard, *l*, rising from the lamp. This lever is in turn connected with a sliding sleeve, *l′*, upon the wick-tube. Excess of heat within the incubating-chamber causes the copper rod to expand, and hence as it is projected farther into the lamp-chamber by reason of such expansion it will cause rod *i* to move about the fulcrum or arm *i′*, and hence operate lever *l* and raise the slide on the wick-tube, so as to lessen the flame, and thus allow the water-receptacle to cool to the required extent. The slide K is supported by a block, K′, and adjusted by a set-screw, *k*, whereby by raising or lowering the slide and its notched arm, which constitutes a fulcral bearing for the steel rod, the throw of the latter can be regulated. The shelves M, for supporting the eggs, slide in the ways *m*, and are each composed of a rectangular frame carrying two rollers, *m′*, upon which is stretched an endless apron, *m²*, of suitable fabric. One of each pair of rollers is provided with a crank, N, by means of which it can be turned so as to move the belt or apron, and thereby turn the eggs supported on the latter. Suitable spaces, *n*, will be left between the ends of the shelves and the casing for the upward circulation of air, and in the casing, above the series of aprons, is a vent-hole, *n′*, which can be closed by a pivoted slide, P. A thermometer, *p*, is arranged in an opening in the casing, above the incubating chamber, so as to indicate the temperature, said opening being closely covered by glass.

Below the lowest egg-shelf is a horizontal sliding partition, Q, which prevents the hot air radiated from the heating-pipe from ascending and impinging directly on said lower shelf. This portion is narrower than the space between the back of the casing and the door of the incubating chamber, so that passages are left for the upward passage of the heated air, which will pass upward and be evenly distributed over the several shelves. Below the pipes in the incubating-chamber is a horizontal perforated partition, R, which supports one or more sponge cups or holders, S. Moist sponges placed in these cups will absorb such impurities in the air as do not escape through the vent-hole in the top of the casing. In practice these sponges should be cleansed every day, and then placed in their holders in a moist condition.

Below the partition R is a drawer, E, in which the chickens can be placed as soon as hatched. Warm air enters this drawer through the perforations in partition R, and fresh air can be supplied to the drawer through a perforated slide, *r*, fitted in the front of the latter, when the perforations in said slide register with like perforations in the front side of the drawer.

U indicates said slide, having a line of perforations, *u*, and *u'* indicate the perforations in the drawer. Air thus entering the drawer will also pass up through the perforated partition R.

Perforations V are formed through the bottom of the lamp-chamber, so as to admit air to support combustion, and an opening can, if desired, be also formed through the top of said chamber. The casing and other supplemental parts of the structure are preferably made of wood, and the same will present a neat and attractive appearance.

The dimensions are left to the option of the manufacturer, and, if desired, several sets of shelves can be employed, with a single drawer under all of said sets.

The form of lamp can be varied and a round or flat wick-tube employed, and the lever connected with the sleeve can be pivoted to any appropriate part of the burner—as, for example, to the rim when a base-burner is used; also, if the apparatus is made on a large scale, several lamps and mechanisms for adjusting their sleeves could be employed.

Having thus described my invention, what I claim is—

1. The combination, with the shelves M, located within the incubating-chamber, of the partition Q, located below the lowest shelf, air-passages at the sides of said partition, and means for supplying heat below said partition, substantially as described.

2. The combination, with the incubating-chamber, of the perforated partition R for supporting sponge-cups, and the drawer located below said partition, substantially as described.

3. The drawer E, located below the incubating-chamber, and provided with perforations in its front, in combination with the slide *r*, provided with like perforations, substantially as described.

In testimony that I claim the above I have hereunto subscribed my name in the presence of two witnesses.

ALBERT HARDING MORGAN.

Witnesses:

GEO. W. DEVOE,

J. W. SCOTT.

757 (Defendants' Exhibit P, Letters Patent No. 286,
C. F. Winkler, October 16, 1883.)

e lowest egg-shelf is a horizontal
tition, Q, which prevents the hot air
om the heating-pipe from ascend-
pinging directly on said lower shelf.
n is narrower than the space be-
back of the casing and the door of
ting chamber, so that passages are
upward passage of the heated air,
pass upward and be evenly distrib-
the several shelves. Below the
e incubating-chamber is a horizon-
ated partition, R, which supports
e sponge cups or holders, S. Moist
aced in these cups will absorb such
in the air as do not escape through
ole in the top of the casing. In
hese sponges should be cleansed
and then placed in their holders in
dition.

he partition R is a drawer, E, in
chickens can be placed as soon as
Warm air enters this drawer
e perforations in partition R, and
n be supplied to the drawer through
d slide, *r*, fitted in the front of the
n the perforations in said slide reg-
ike perforations in the front side
wer.

tes said slide, having a line of per-
, and *w'* indicate the perforations
wer. Air thus entering the drawer
ass up through the perforated par-

ons V are formed through the bot-
lamp-chamber, so as to admit air to
mbustion, and an opening can, if
also formed through the top of
er. The casing and other supple-
ts of the structure are preferably
made of wood, and the same will present a neat and attractive appearance.

The dimensions are left to the option of the manufacturer, and, if desired, several sets of shelves can be employed, with a single drawer under all of said sets.

The form of lamp can be varied and a round or flat wick-tube employed, and the lever connected with the sleeve can be pivoted to any appropriate part of the burner—as, for example, to the rim when a base-burner is used; also, if the apparatus is made on a large scale, several lamps and mechanisms for adjusting their sleeves could be employed.

Having thus described my invention, what I claim is—

1. The combination, with the shelves M, located within the incubating-chamber, of the partition Q, located below the lowest shelf, air-passages at the sides of said partition, and means for supplying heat below said partition, substantially as described.

2. The combination, with the incubating-chamber, of the perforated partition R for supporting sponge-cups, and the drawer located below said partition, substantially as described.

3. The drawer E, located below the incubating-chamber, and provided with perforations in its front, in combination with the slide *r*, provided with like perforations, substantially as described.

In testimony that I claim the above I have hereunto subscribed my name in the presence of two witnesses.

ALBERT HARDING MORGAN.

Witnesses:

GEO. W. DEVOE,

J. W. SCOTT.

757 (Defendants' Exhibit P, Letters Patent No. 286,756 to C. F. Winkler, October 16, 1883.)

610

(No Model.) 3 Sheets—Sheet 3.

C. F. WINKLER.

INCUBATOR.

No. 286,756. Patented Oct. 16, 1883.

Fig. 4.

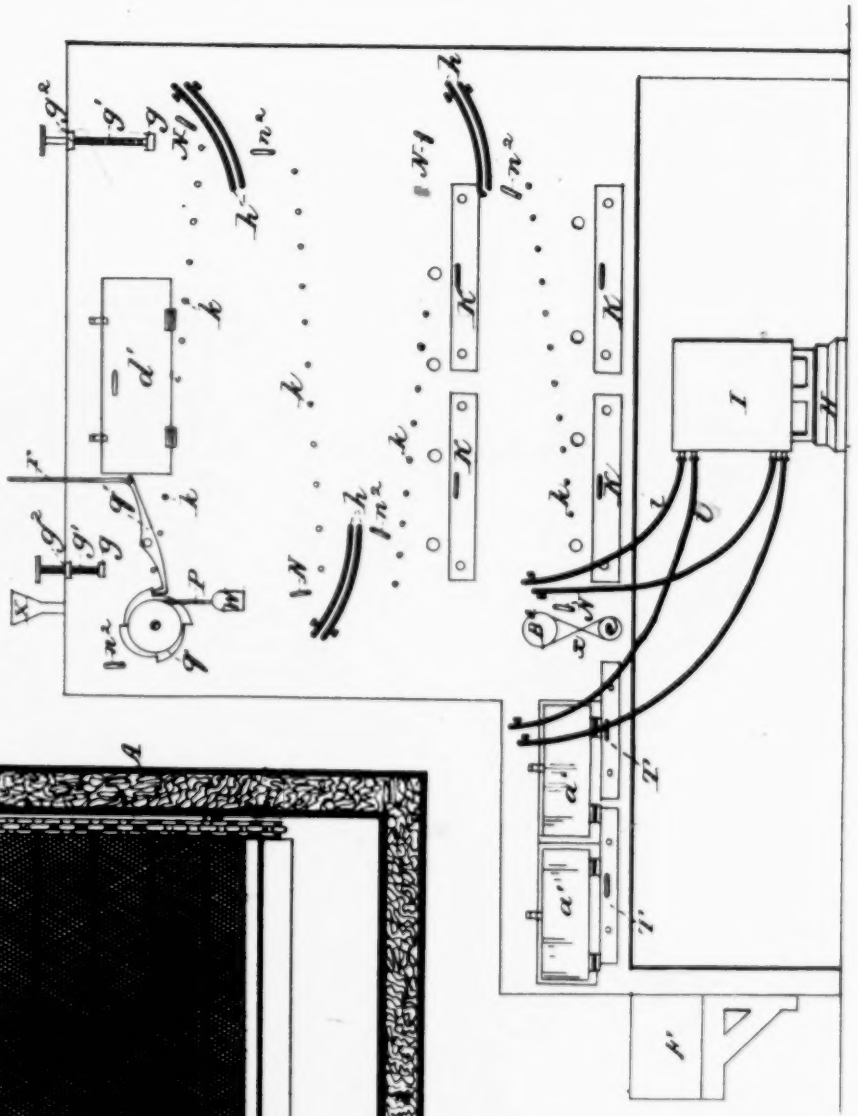

Fig. 5

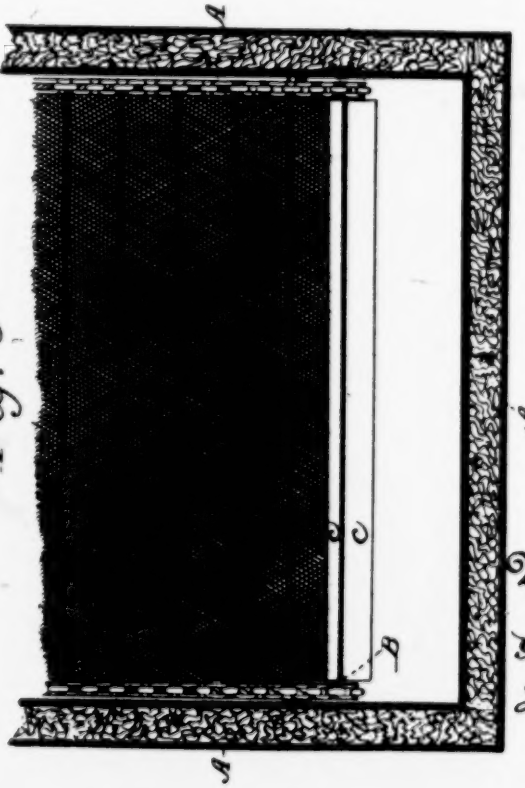

Witnesses, Inventor
C. F. Winkler
Geo. H. Strong
Lawrence Dewey & Co.
Attorneys

612 (No Model.) 3 Sheets—Sheet 2.

C. F. WINKLER.

INCUBATOR.

No. 286,756. Patented Oct. 16, 1883.

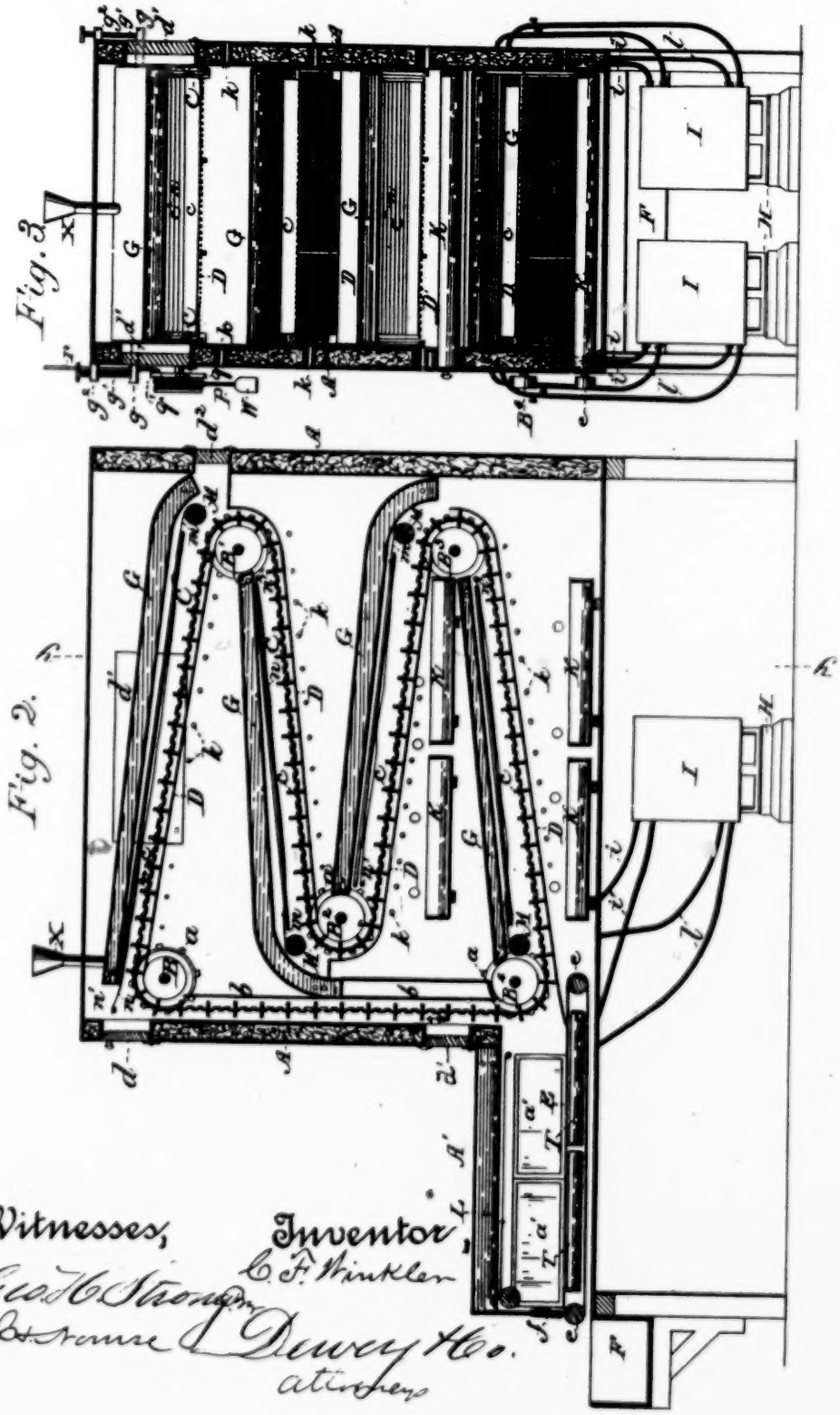

Witnesses, Inventor,

Geo. H. Strong C. F. Winkler

J. S. Krause Dewey & Co.

attorneys

614

(No Model.) 3 Sheets—Sheet 1.

C. F. WINKLER.

INCUBATOR.

No. 286,756. Patented Oct. 16, 1883.

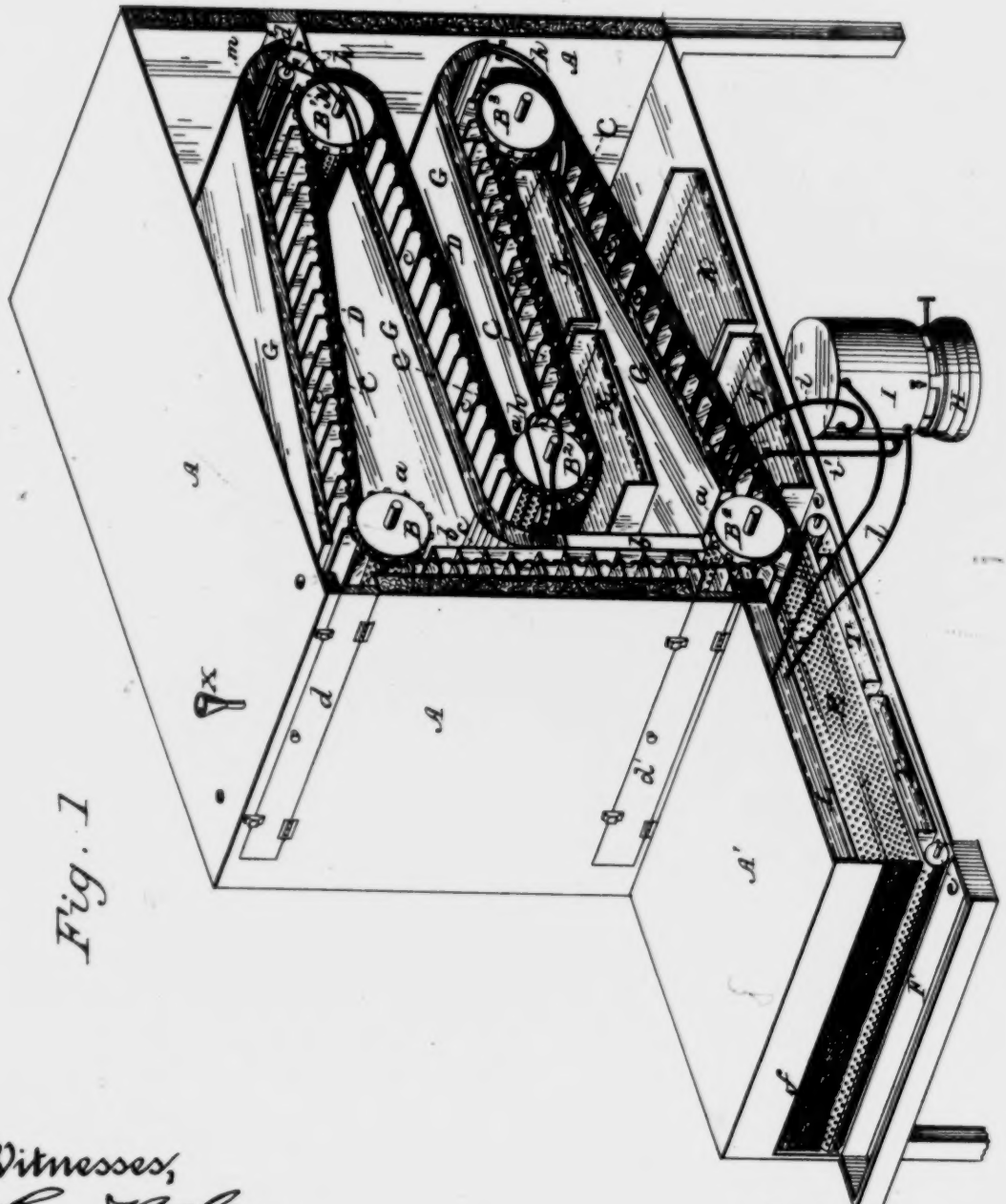

Fig. 1

Witnesses,
Geo. H. Strong.
J. H. Munn

Inventor,
C. F. Winkler
by Dewey & Co.
Attorneys

UNITED STATES PATENT

CHARLES F. WINKLER, OF BAKERSFIELD, CA

INCUBATOR.

SPECIFICATION forming part of Letters Patent No. 288,756; d

Application filed May 17, 188 (No model.)

To all whom it may concern:

Be it known that I, CHARLES F. WINKLER, of Bakersfield, county of Kern, State of California, have invented an Improvement in an Incubator; and I hereby declare the following to be a full, clear, and exact description thereof.

My invention relates to certain new and useful improvements in the class of incubators employing an endless traveling conveyer for receiving and advancing the eggs; and the invention consists in novel features of construction and combination of parts, all as will be hereinafter fully described, and set forth in the claims hereto annexed.

The object I have in view in this invention is to overcome certain patent difficulties which attend the operation of machines now in use. A brief recital of these will serve to explain more clearly my object. During the progress of incubation the temperature must vary. At the beginning the eggs require a greater heat than at the close, because toward the end the embryo, having increased, furnishes a certain amount of heat for itself. For this reason the temperature produced by the apparatus should be gradually decreased during the process. This necessitates the complete charging of the incubator at the start. One lot of eggs cannot be introduced to-day and another in a week, because the temperature would be unsuitable for either one lot or the other. In large machines this immediate and large collection of eggs presents the difficulty of getting them fresh enough, or requires an outlay of money. My machine is so constructed as to allow the introduction of a fresh lot of eggs at short intervals, and gives to each lot its own required temperature. This enables me to use successively perfectly fresh eggs without trouble, and makes the process continuous, which is a very desirable result in poultry-raising. Again, when all the eggs have reached an equal stage, and the young begin to come out, they are all crowded in the same apartment, or many are in several chambers. They hatch practically simultaneously, so that a great many are always wet. This necessitates the constant opening of the

or, if allowed to rem
gling about while s
hatched eggs and pre
they injure themselv
in the interstices bet
chine hatches them i
from the unhatched e
ture is not lowered b
they injured, nor do t
Again, the ordinary r
for all kinds of egg
and chicken eggs p
ously,) because these
of incubation, the pe
one kind will not a
machine provides fo
abled to place all ki
each its required p
These are some of
overcome. The vari
vantages which I gai
course of the followi
struction, which will
ence to the accompany

Figure 1, Sheet 1, i
my machine, having
to show the interior.
tical longitudinal sec
cross-section on line y
3, is a side elevation
tion of a plan, showi

A is the casing of th
ble-spaced walls filled
ing material.

B is a hollow drum
face, and mounted tra
the machine near its t
similar drum, mounte
little lower down. B²
first end, lower down
B³ is a drum at the ot
at the bottom in the fi

C C are endless chai
of the drums, and fol
down to and around B³,
around B², to and ar
cally behind an inner
beginning. The ends

C. F. WINKLER.

INCUBATOR.

Patented Oct. 16, 1883.

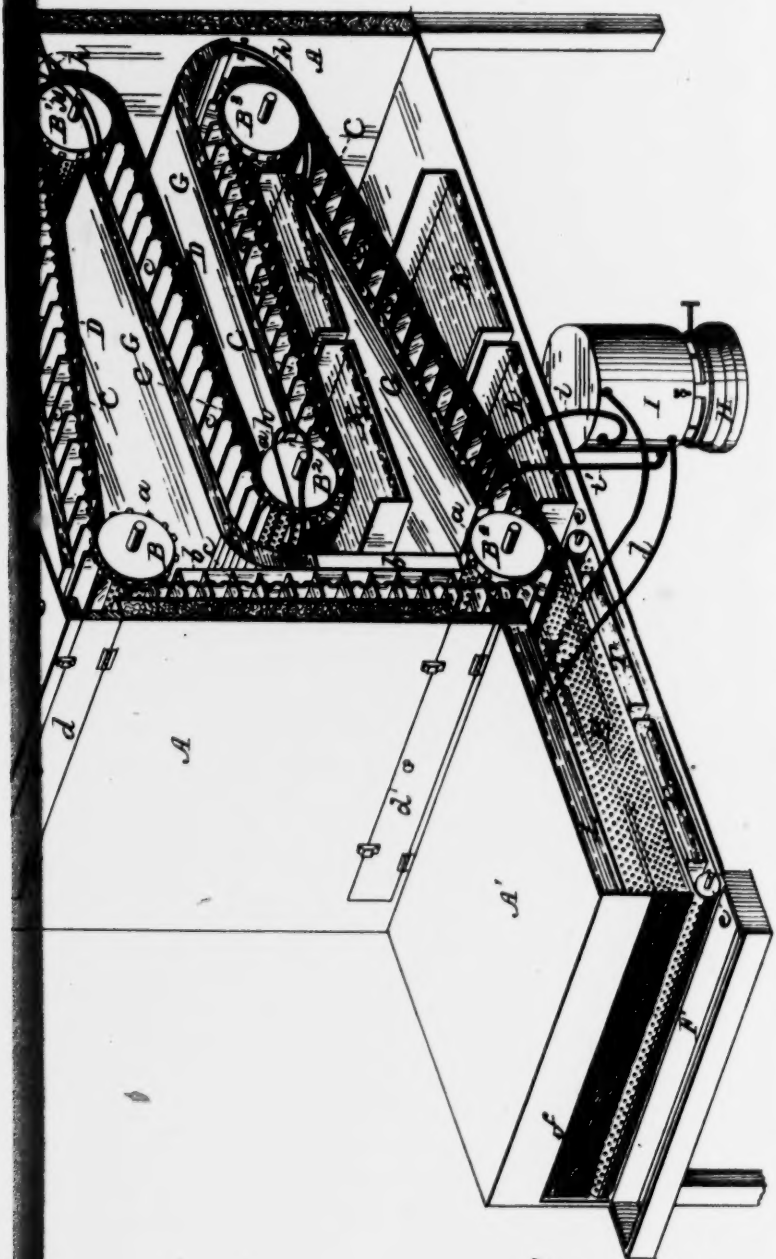

Inventor,
C. F. Winkler
by Dewey & Co.
Attorneys

UNITED STATES PATENT OFFICE.

CHARLES F. WINKLER, OF BAKERSFIELD, CALIFORNIA

INCUBATOR.

SPECIFICATION forming part of Letters Patent No. 286,756; dated October 16, 1883.

Application filed May 17, 1883. (No model.)

To all whom it may concern:

Be it known that I, CHARLES F. WINKLER, of Bakersfield, county of Kern, State of California, have invented an Improvement in an Incubator; and I hereby declare the following to be a full, clear, and exact description thereof.

My invention relates to certain new and useful improvements in the class of incubators employing an endless traveling conveyer for receiving and advancing the eggs; and the invention consists in novel features of construction and combination of parts, all as will be hereinafter fully described, and set forth in the claims hereto annexed.

The object I have in view in this invention is to overcome certain patent difficulties which attend the operation of machines now in use. A brief recital of these will serve to explain more clearly my object. During the progress of incubation the temperature must vary. At the beginning the eggs require a greater heat than at the close, because toward the end the embryo, having increased, furnishes a certain amount of heat for itself. For this reason the temperature produced by the apparatus should be gradually decreased during the process. This necessitates the complete charging of the incubator at the start. One lot of eggs cannot be introduced to-day and another in a week, because the temperature would be unsuitable for either one lot or the other. In large machines this immediate and large collection of eggs presents the difficulty of getting them fresh enough, or requires an outlay of money. My machine is so constructed as to allow the introduction of a fresh lot of eggs at short intervals, and gives to each lot its own required temperature. This enables me to use successively perfectly fresh eggs without trouble, and makes the process continuous, which is a very desirable result in poultry-raising. Again, when all the eggs have reached an equal stage, and the young begin to come out, they are all crowded in the same apartment, or many are in several chambers. They hatch practically simultaneously, so that a great many are always wet. This necessitates the constant opening of the doors to remove them, which, by lowering the temperature, affects injuriously the other eggs; or, if allowed to remain, the young, in struggling about while still wet, smear the unhatched eggs and prevent their hatching; or they injure themselves on the broken shells or in the interstices between the eggs. My machine hatches them in small batches removed from the unhatched eggs, so that the temperature is not lowered by removing them, nor are they injured, nor do they injure the other eggs. Again, the ordinary machines are not adapted for all kinds of eggs, (goose, turkey, duck, and chicken eggs placed therein promiscuously,) because these having different periods of incubation, the periods of temperature for one kind will not answer for another. My machine provides for this, so that I am enabled to place all kinds of eggs and give to each its required period and temperature. These are some of the difficulties which I overcome. The various other and minor advantages which I gain will appear during the course of the following description of the construction, which will be clearly seen by reference to the accompanying drawings, in which—

Figure 1, Sheet 1, is a perspective view of my machine, having one of its sides removed to show the interior. Fig. 2, Sheet 2, is a vertical longitudinal section of same. Fig. 3 is a cross-section on line *y y*, Fig. 2. Fig. 4, Sheet 3, is a side elevation of same. Fig. 5 is a portion of a plan, showing the conveyer.

A is the casing of the machine, having double-spaced walls filled with some non-conducting material.

B is a hollow drum perforated over its surface, and mounted transversely in the sides of the machine near its top at one end. B' is a similar drum, mounted in the other end and a little lower down. B^2 is a drum mounted in the first end, lower down and a little farther in. B^3 is a drum at the other end, and B^4 a drum at the bottom in the first end.

C C are endless chains passing over the ends of the drums, and following a course from B down to and around B', to and around B^2, to and around B^3, to and around B^4, and up vertically behind an inner wall *b*, to the point of beginning. The ends of the drums are provided with teeth or pins *a*, similar to a sprocket-pulley, for engaging with the links of the chains and insuring a positive motion there-

for. On account of the position of the drums the course of the chains is inclined downwardly to drum B'. Secured at short intervals in the chains are the tranverse slats *c*, which form a conveyer, as I shall explain. These slats are secured to the chains at the middle line of their ends, thus making half the width of the slat below and half above the chains, for the reason that in turning around the drums they become reversed edge for edge. These slats travel over flooring D. This may consist of any perforated material, wire screen being preferable, to permit ventilation. This flooring is in sections, the uppermost piece lying between the drums B B', the next between drums B' B², and so on down. The top section is straight; but the others are bent around the upper drum of each, following its curvature to a point above its center, in order to receive and guard the eggs when traveling around the drum, and to keep them to their places between the slats. The lowest of these flooring-sections opens down upon an endless perforated belt or carrier, E, placed in a horizontal plane, and traveling over rollers *e* within an extension, A', of the main casing A.

I shall now explain the operation and advantages of the devices as far as described.

In one end of the machine, at its top, is a door, *d*, another, *d'*, in its sides, below the former, and another, *d²*, in its other end. The conveyer, consisting of the chains and slats, travels downward at certain times by means which I shall hereinafter describe. The length of the belt and the distances of its periodical progression are so regulated that from the point where a slat, *c*, passes the door *d'* to the point where it turns and begins to ascend will be about nineteen days. This period covers the time during which it is found necessary to turn chicken-eggs. From the point where the conveyer passes the door *d'* to the lowest point, the period is from twenty-five to twenty-eight days, and from the very top at door *d* to to bottom it is about thirty days. These periods cover the time necessary for turning other than chicken-eggs. The eggs are placed between the slats *c* and rest upon the floors D. The chicken-eggs are placed into the conveyer through the door *d²*, the duck and turkey eggs through the door *d'*, and the goose-eggs through door *d*. Knowing the times at which the conveyer is advanced its set distance, I am ready with a fresh lot of eggs to put through the doors into the slats which are within reach. At the next time, these eggs have been carried forward and empty slats presented, into which I put another lot, and so on. In this way I put in, at short intervals, a limited number. The eggs being discharged below, the slats ascend empty, and the operation is continuous. The turning of the eggs is entirely automatic, for the reason that they rest on a stationary downwardly-inclined floor, and are advanced by the traveling slats, between which they lie. They thus roll, and the distance which the conveyer advances at one time is regulated to turn them a quarter or a half a turn, as the case may be. The curved ends of the floor-sections D receive the eggs as they come around the drums. When they reach the bottom the chicks will have picked the shells, and the eggs must not thereafter be turned. This is the object of the horizontal traveling carrier E. This carrier is advanced at intervals at such a rate that it may take, say, about three days to reach the end. The eggs do not roll on the carrier, but are advanced. The chicks come out, and are removed through side doors, *a'*, while the shells and bad eggs continue, and are discharged through the open end of the extension A' into a receptacle, F. The end of the extension is preferably covered by a fringe, *f*. It will be observed that the place in which the chicks are hatched is sufficient in area not to be crowded, thereby giving the chicks a fair chance, and they are sufficiently removed from the other eggs yet in process to prevent injury to them.

I shall now describe the means by which I obtain the desired temperature.

Over the conveyer, above all its folds and following its inclination, are the sections of water-jacket G. These are independent of each other, and are suspended at their ends by means of blocks *g*, projecting through slots in the casing A, and the screws *g'*, attached at their lower ends to the blocks *g*, and passing vertically through suitable holes in the blocks *g²*, Fig. 4. By turning these screws each section of water-jacket may be raised or lowered independently. The ends of these sections are curved, where necessary, to follow the course of the conveyer, and they are preferably tapered to their upper ends, in order to reduce their thickness and provide for a greater vertical play in small space. The ends of the sections of water-jacket G are connected with each other by two flexible pipes, *h*. Of these, one joins the bottoms of the jackets and the other the tops, whereby the free circulation of the hot and cold water is permitted. Under the machine are the coal-oil stoves H, having the boilers I. From the tops of these boilers extend flexible pipes *i* to the upper portion of the lower end of the lowest section of water-jacket G. Flexible pipes *i'* join the bottom of the boilers with the lower portion of said sections. These connecting-pipes, being flexible, permit the adjustment of each section of water-jacket. It is through the means of this adjustment that I obtain the required heat for all stages of the operation. As hot water goes to the top, it will be found that the uppermost water-jacket will be the hottest, and so on down, and as greater heat is required at the beginning of the process, this is the suitable condition. After the machine has been set up and tested, it will readily be seen what difference in temperature exists between each of the sections. Then by vertically adjusting the water-sections they may be brought in closer prox-

imity to or farther from the eggs, in order to give them the heat required at whatever stage of the process they may be. In like manner, the adjustment of one end of a section will provide for any change in temperature which may be required in the extent of one fold of the conveyer.

X is the funnel, through which the water-jacket and boilers are filled. Small holes *k* through the sides of the casing A provide for the admission of fresh air under the perforated floor-sections. Under the lower two floor-sections I have the water-trays K, to provide moisture during the later stages of the process, when it is most needed. Over the horizontal carrier E, I have a separate water-jacket, L, which is connected with the top and bottom of boiler by pipes *l*. The heat of this is regulated to give the required temperature during the very latest stages of incubation.

The eggs require to be cooled about once a day. This I do by the following means: Mounted transversely in the casing over the bends or turns in the conveyer, and between it and the water-jackets, are rollers M, upon which are wound curtains *m*, of some kind of cloth or fabric. With the edges of these are connected strings *n*, which extend over the conveyer, and are wound on a shaft, *n'*, having crank *n²*. By winding these strings the curtains are unwound and lie over the eggs, shielding them from the heat. When sufficiently cool, they are wound back upon their rollers. This is done by small cranks N on their ends, though I may provide them with springs to operate automatically, as ordinary window-curtains work.

In Fig. 4 I show a portion of the means by which I cause the periodical advancement of the conveyer. The end of drum B, or a gudgeon thereon, projects through the side of the casing, and has a cord, P, wound thereon. This cord suspends a weight, W, which is sufficient, with the weight of the conveyer and its eggs, to cause said conveyer to advance with a positive motion. Upon the drum is a ratchet, *q*, with which a pivoted latch, *q'*, engages. The outer arm of this latch is heavy enough to cause its point to engage with the ratchet and hold the drum stationary. The end of the latch is connected by a rod, *r*, with clock-work, which I have not deemed it necessary to show here. At stated periods—say every six hours—the clock-work raises rod *r*, withdrawing the latch from the ratchet momentarily. The drum then turns, advancing the conveyer. The rod is immediately relieved, and the latch drops back to engage with the next tooth of the ratchet and stop the conveyer. By regulating the diameter of this ratchet the advancement of the conveyer is rendered definite. Between the top and bottom of the horizontal carrier E are water-trays T, for supplying moisture. In order to impart a forward motion to the horizontal carrier E, I have the cross-belt *x*, Fig. 4, from the drum B' to one of the rollers *e*.

Having thus descr
claim as new, and de
Patent, is—

1. In an incubator
the eggs, and means
veyer periodically, i
ing devices arranged
at all points during
substantially as and
described.

2. In an incubator
the eggs, consisting
which the eggs lie, a
it, in combination wi
which the conveyer
the eggs rest, where
vancement of the co
gress, substantially
herein described.

3. In an incubator
and B', having teeth
having spaced cross
advancing said chai
tion with the perfora
which the slats trave
the purpose herein d

4. In an incubato
drums B, B', B², B³,
the endless chains C
slats *c*, and a means
and slats, in combina
floor-sections D, hav
centric with the dru
substantially as and f
scribed.

5. In an incubato
doors *d d' d²*, in comb
egg-conveyer consist
C C and cross-slats *c*,
means for advancing
tially as and for the

6. In an incubator
the endless chains C
means for advancing
the perforated floor
tion with the water-j
slats, and means for h
substantially as and f
scribed.

7. In an incubator,
the endless chains C
means for advancing
the perforated floor
tion with the superp
jacket G, means for h
and means for adjust
stantially as and for
scribed.

8. In an incubator,
consisting of the endl
slats *c*, and means fo
perforated floor-secti
with superposed sect
means for vertically a
ently, the flexible co
ers I, and flexible co

sition of the drums
clined downwardly
ort intervals in the
ts *e*, which form a
n. These slats are
middle line of their
e width of the slat
ains, for the reason
drums they become
These slats travel
consist of any per-
n being preferable.
s flooring is in sec-
lying between the
n drums B' B², and
is straight; but the
e upper drum of
re to a point above
ive and guard the
the drum, and to
between the slats.
ng-sections opens
orated belt or car-
zontal plane, and
hin an extension,

operation and ad-
ar as described.
at its top, is a door,
below the former,
er end. The con-
ns and slats, travels
s by means which
e. The length of
its periodical pro-
at from the point
oor *d*² to the point
to ascend will be
period covers the
d necessary to turn
oint where the con-
o the lowest point,
ive to twenty-eight
top at door *d* to
rty days. These
essary for turning
The eggs are placed
upon the floors D.
l into the conveyer
ck and turkey eggs
goose-eggs through
s at which the con-
stance, I am ready
o put through the
e within reach. At
have been carried
sented, into which

In this way I put
ited number. The
w, the slats ascend
continuous. The
rely automatic, for
a stationary down-
re advanced by the
ich they lie. They
which the conveyer

advances at one time is regulated to turn them a quarter or a half a turn, as the case may be. The curved ends of the floor-sections D receive the eggs as they come around the drums. When they reach the bottom the chicks will have picked the shells, and the eggs must not thereafter be turned. This is the object of the horizontal traveling carrier E. This carrier is advanced at intervals at such a rate that it may take, say, about three days to reach the end. The eggs do not roll on the carrier, but are advanced. The chicks come out, and are removed through side doors, *a'*, while the shells and bad eggs continue, and are discharged through the open end of the extension A' into a receptacle, F. The end of the extension is preferably covered by a fringe, *f*. It will be observed that the place in which the chicks are hatched is sufficient in area not to be crowded, thereby giving the chicks a fair chance, and they are sufficiently removed from the other eggs yet in process to prevent injury to them.

I shall now describe the means by which I obtain the desired temperature.

Over the conveyer, above all its folds and following its inclination, are the sections of water-jacket G. These are independent of each other, and are suspended at their ends by means of blocks *g*, projecting through slots in the casing A, and the screws *g'*, attached at their lower ends to the blocks *g*, and passing vertically through suitable holes in the blocks *g²*, Fig. 4. By turning these screws each section of water-jacket may be raised or lowered independently. The ends of these sections are curved, where necessary, to follow the course of the conveyer, and they are preferably tapered to their upper ends, in order to reduce their thickness and provide for a greater vertical play in small space. The ends of the sections of water-jacket G are connected with each other by two flexible pipes, *h*. Of these, one joins the bottoms of the jackets and the other the tops, whereby the free circulation of the hot and cold water is permitted. Under the machine are the coal-oil stoves H, having the boilers I. From the tops of these boilers extend flexible pipes *i* to the upper portion of the lower end of the lowest section of water-jacket G. Flexible pipes *i'* join the bottom of the boilers with the lower portion of said sections. These connecting-pipes, being flexible, permit the adjustment of each section of water-jacket. It is through the means of this adjustment that I obtain the required heat for all stages of the operation. As hot water goes to the top, it will be found that the uppermost water-jacket will be the hottest, and so on down, and as greater heat is required at the beginning of the process, this is the suitable condition. After the machine has been set up and tested, it will readily be seen what difference in temperature exists between each of the sections. Then by vertically adjusting the water-sections they may be brought in closer prox-

imity to or farther from the eggs, in order to give them the heat required at whatever stage of the process they may be. In like manner, the adjustment of one end of a section will provide for any change in temperature which may be required in the extent of one fold of the conveyer.

X is the funnel, through which the water-jacket and boilers are filled. Small holes *k* through the sides of the casing A provide for the admission of fresh air under the perforated floor-sections. Under the lower two floor-sections I have the water-trays K, to provide moisture during the later stages of the process, when it is most needed. Over the horizontal carrier E, I have a separate water-jacket, L, which is connected with the top and bottom of boiler by pipes *l*. The heat of this is regulated to give the required temperature during the very latest stages of incubation.

The eggs require to be cooled about once a day. This I do by the following means: Mounted transversely in the casing over the bends or turns in the conveyer, and between it and the water-jackets, are rollers M, upon which are wound curtains *m*, of some kind of cloth or fabric. With the edges of these are connected strings *n*, which extend over the conveyer, and are wound on a shaft, *n'*, having crank *n²*. By winding these strings the curtains are unwound and lie over the eggs, shielding them from the heat. When sufficiently cool, they are wound back upon their rollers. This is done by small cranks N on their ends, though I may provide them with springs to operate automatically, as ordinary window-curtains work.

In Fig. 4 I show a portion of the means by which I cause the periodic advancement of the conveyer. The end of drum B, or a gudgeon thereon, projects through the side of the casing, and has a cord, P, wound thereon. This cord suspends a weight, W, which is sufficient, with the weight of the conveyer and its eggs, to cause said conveyer to advance with a positive motion. Upon the drum is a ratchet, *q*, with which a pivoted latch, *q'*, engages. The outer arm of this latch is heavy enough to cause its point to engage with the ratchet and hold the drum stationary. The end of the latch is connected by a rod, *r*, with clock-work, which I have not deemed it necessary to show here. At stated periods—say every six hours—the clock-work raises rod *r*, withdrawing the latch from the ratchet momentarily. The drum then turns, advancing the conveyer. The rod is immediately relieved, and the latch drops back to engage with the next tooth of the ratchet and stop the conveyer. By regulating the diameter of this ratchet the advancement of the conveyer is rendered definite. Between the top and bottom of the horizontal carrier E are water-trays T, for supplying moisture. In order to impart a forward motion to the horizontal carrier E, I have the cross-belt *x*, Fig. 4, from the drum B' to one of the rollers *e*.

Having thus described my invention, what I claim as new, and desire to secure by Letters Patent, is—

1. In an incubator, a conveyer for receiving the eggs, and means for advancing said conveyer periodically, in combination with heating devices arranged to give the heat requisite at all points during the progress of the eggs, substantially as and for the purposes herein described.

2. In an incubator, a conveyer for receiving the eggs, consisting of spaced slats, between which the eggs lie, and means for advancing it, in combination with an inclined floor, down which the conveyer travels and upon which the eggs rest, whereby they turn with the advancement of the conveyer and their own progress, substantially as and for the purposes herein described.

3. In an incubator, the drums B, B', B², B³, and B⁴, having teeth *a*, the endless chain C C, having spaced cross-slats *c*, and a means for advancing said chains and slats, in combination with the perforated floor-sections D, over which the slats travel, substantially as and for the purpose herein described.

4. In an incubator, the hollow perforated drums B, B', B², B³, and B⁴, having teeth *a*, the endless chains C C, having spaced cross-slats *c*, and a means for advancing said chains and slats, in combination with the perforated floor-sections D, having their upper ends concentric with the drums for a short distance, substantially as and for the purpose herein described.

5. In an incubator, the casing A, having doors *d d' d²*, in combination with the endless egg-conveyer consisting of the endless chains C C and cross-slats *c*, passing said doors, and a means for advancing said conveyer, substantially as and for the purpose herein described.

6. In an incubator, the drums B B' B² B³ B⁴, the endless chains C C and spaced slats *c*, and means for advancing said chains and slats, and the perforated floor-sections D, in combination with the water-jackets G, placed over the slats, and means for heating the water therein, substantially as and for the purpose herein described.

7. In an incubator, the drums B B' B² B³ B⁴, the endless chains C C and spaced slats *c*, and means for advancing said chains and slats, and the perforated floor sections D, in combination with the superposed sections of water-jacket G, means for heating the water therein, and means for adjusting them vertically, substantially as and for the purpose herein described.

8. In an incubator, the tortuous conveyer consisting of the endless chains C C and cross-slats *c*, and means for advancing it, and the perforated floor-sections D, in combination with superposed sections of water-jacket G, means for vertically adjusting them independently, the flexible connecting-pipes *h*, the boilers I, and flexible connecting-pipes *i i'*, sub-

stantially as and for the purpose herein described.

9. In an incubator, the tortuous conveyer, as herein described, and means for advancing it, in combination with the horizontal endless carrier E and means for actuating it, substantially as and for the purpose herein described.

10. In an incubator, the tortuous conveyer consisting of the endless chains C C and spaced cross-slats *c*, and means for advancing it, and the downwardly-inclined floor-sections D, upon which the eggs roll, in combination with the horizontal endless carrier E and means for actuating it, substantially as and for the purpose herein described.

11. In an incubator, the tortuous traveling conveyer, as herein described, in combination with the endless traveling carrier E, the superposed water-jacket L, the boilers I, and connecting-pipes *l*, substantially as and for the purpose herein described.

12. In an incubator, the traveling conveyer, as herein described, and the superposed sections of water-jacket G, in combination with the intervening curtains, *m*, substantially as and for the purpose herein described.

13. In an incubator, the traveling conveyer, as herein described, and the superposed sections of water-jacket G, in combination with the rollers M, the curtains *m* thereon, and the draw-strings *n*, substantially as and for the purpose herein described.

14. In an incubator, the endless conveyer, as herein described, in combination with the means for advancing it periodically, consisting of the driving-drum B, the rope P, and weight W, and the holding mechanism consisting of the ratchet *q* and pivoted latch *q'*, which are to be operated by a momentary releasing mechanism, substantially as and for the purpose herein described.

In witness whereof I have hereunto set my hand.

CHARLES F. WINKLER.

Witnesses:
WM. F. BOOTH,
J. H. BLOOD.

767 (Defendants' Exhibit P, Letters Patent No. G. Conant, April 29, 1884.)

and for the purpose herein de-

ncubator, the tortuous conveyer, scribed, and means for advancing nation with the horizontal endless d means for actuating it, substan- l for the purpose herein described.

incubator, the tortuous conveyer f the endless chains C C and spaced , and means for advancing it, and ardly-inclined floor-sections D, the eggs roll, in combination with al endless carrier E and means for substantially as and for the pur- described.

incubator, the tortuous traveling s herein described, in combination lless traveling carrier E, the su- ater-jacket L, the boilers I, and pipes *l*, substantially as and for herein described.

incubator, the traveling conveyer, scribed, and the superposed sec- ter-jacket G, in combination with the intervening curtains, *m*, substantially as and for the purpose herein described.

13. In an incubator, the traveling conveyer, as herein described, and the superposed sections of water-jacket G, in combination with the rollers M, the curtains *m* thereon, and the draw-strings *n*, substantially as and for the purpose herein described.

14. In an incubator, the endless conveyer, as herein described, in combination with the means for advancing it periodically, consisting of the driving-drum B, the rope P, and weight W, and the holding mechanism consisting of the ratchet *q* and pivoted latch *q'*, which are to be operated by a momentary releasing mechanism, substantially as and for the purpose herein described.

In witness whereof I have hereunto set my hand.

CHARLES F. WINKLER.

Witnesses:
WM. F. BOOTH,
J. H. BLOOD.

767 (Defendants' Exhibit P, Letters Patent No. 297,676 to G. Conant, April 29, 1884.)

620

(No Model.)

G. CONANT

DEVICE FOR PRESERVING EGGS.

No. 297,676. Patented Apr. 29, 1884.

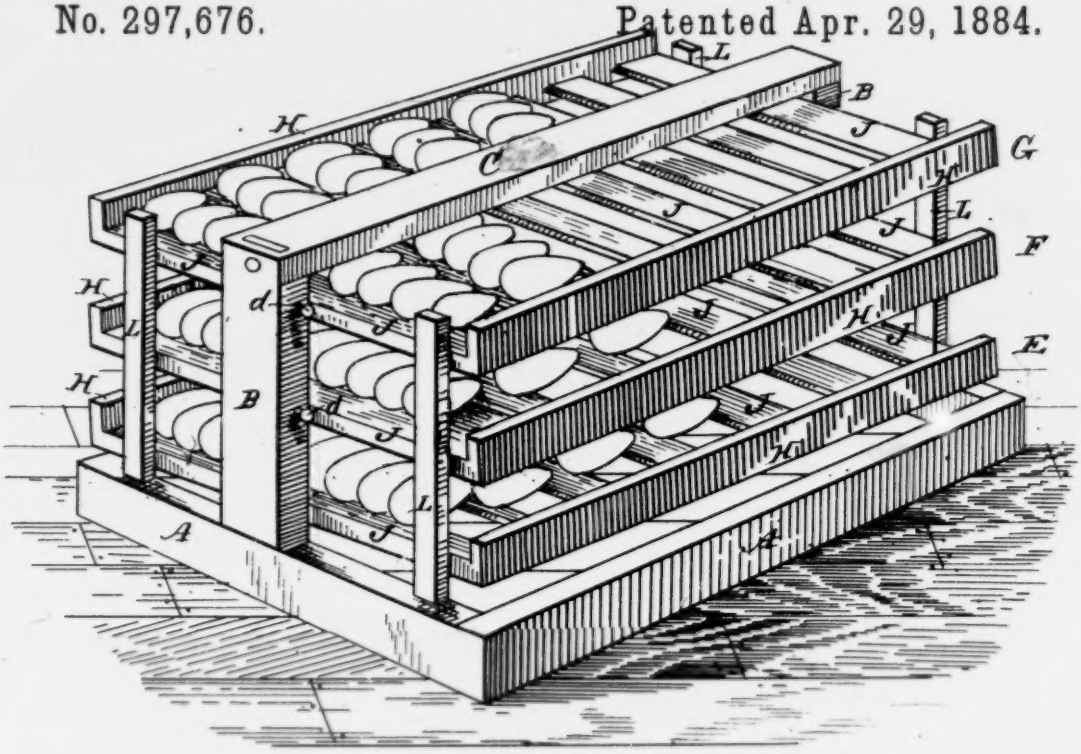

Fig. 1.

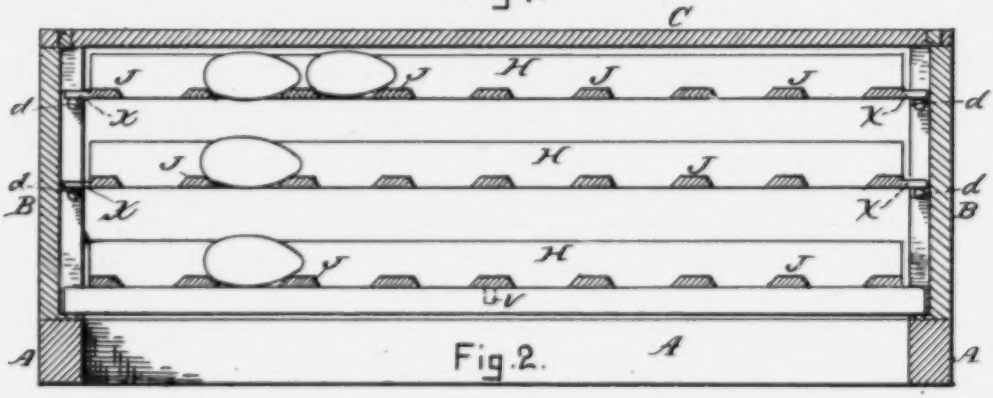

Fig. 2.

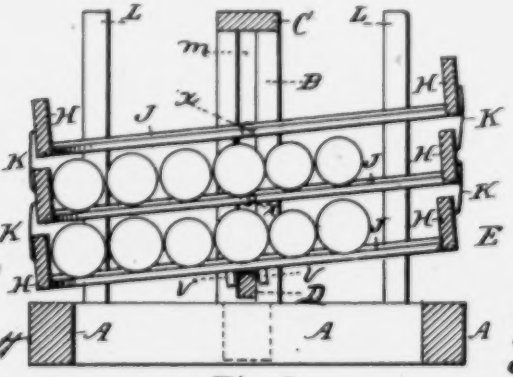

Fig. 3.

Witnesses:
Alfred. Faucett
L. J. White

Inventor:
George Conant,
per C. C. Shaw,
Atty

UNITED STATES PATEN

GEORGE CONANT, OF MARSHFIELD, MAS

DEVICE FOR PRESERVING E

SPECIFICATION forming part of Letters Patent No. 297,6

Application filed October 5, 1883. (No model.)

To all whom it may concern:

Be it known that I, GEORGE CONANT, of Marshfield, in the county of Plymouth, State of Massachusetts, have invented a certain new and useful Improvement on Egg-Preservers, of which the following is a description sufficiently full, clear, and exact to enable any person skilled in the art or science to which said invention appertains to make and use the same, reference being had to the accompanying drawings, forming a part of this specification, in which—

Figure 1 is an isometrical perspective view representing my improved egg-preserver in use; Fig. 2, a vertical transverse section taken through the center of the standards, and Fig. 3 a vertical longitudinal section.

Like letters of reference indicate corresponding parts in the different figures of the drawings.

My invention relates to that class of egg-preservers in which the eggs are preserved by mechanical in contradistinction to chemical means; and it consists in a novel construction and arrangement of the parts, as hereinafter more fully set forth and claimed, by which a simpler, cheaper, and more effective device of this character is produced than is now in ordinary use.

The nature and operation of the improvement will be readily understood by all conversant with such matters from the following explanation, its extreme simplicity rendering an elaborate description unnecessary.

In the drawings, A represents the base or bed-piece of the machine, and B the uprights or standards. The standards are framed into the base, and connected at their upper ends by the cross-bar C, each one being provided on its inner face with a vertical longitudinal groove or slot, *m*.

Disposed in the lower part of the machine, between the standards, there is a cross-bar or fulcrum, D, and centrally arranged thereon is a rack, E, provided with downwardly-projecting pins *v*, to prevent it from sliding or moving out of position, but so arranged as to permit the rack to be freely tilted or rocked. This rack consists of the end pieces, H, connected by a series of rails or slats, J, the rails being beveled o
seen in Fig. 2.
tended slightly a
eggs from rolling
is tilted.

Two racks, F G
the same manne
above said last-n
ing provided wi
the slots *m*, an
through the sta
pivoting them a
or rocked in the
If preferred, all
with pins *v* and
entering the slot
the pins *d*, or in
A wire, K, is se
such a manner a
thereby enabling
on their supports
will be understoo
signed to be rota
tilted in either
the horizontal.
the bed-piece A
the motion of th
stop may be emp
are connected on
for connecting th
to tilt in unison,
their motion and
of inclination.
ard L, is also pro
bed-piece to assi
proper position.

In the use of my
or machine is plac
ed for the purpo
eggs being placed
contiguous bevel
their axes at right
being sufficiently
eggs from falling
ciently far apart
air. When the
chine in the mann
side by side, and
seen in Figs. 1 an
separated, and ea

G. CONANT.

DEVICE FOR PRESERVING EGGS.

Patented Apr. 29, 1884.

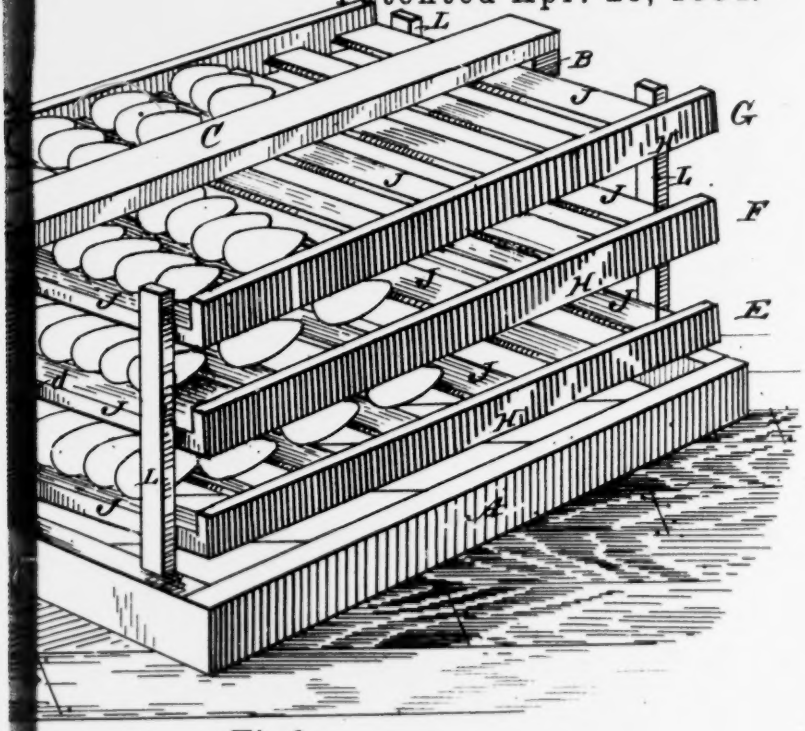

Fig. 1.

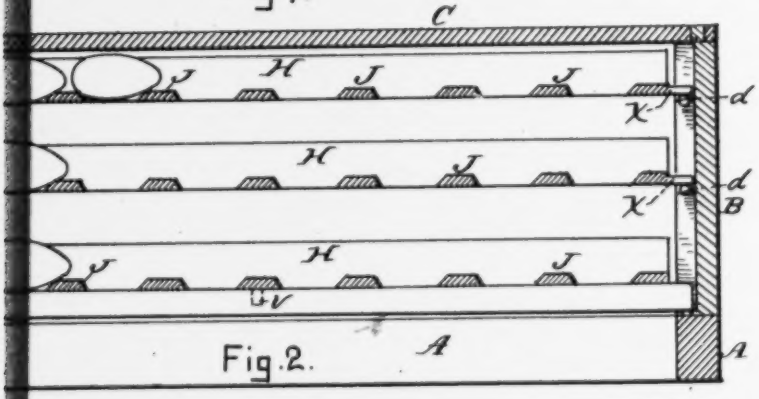

Fig. 2.

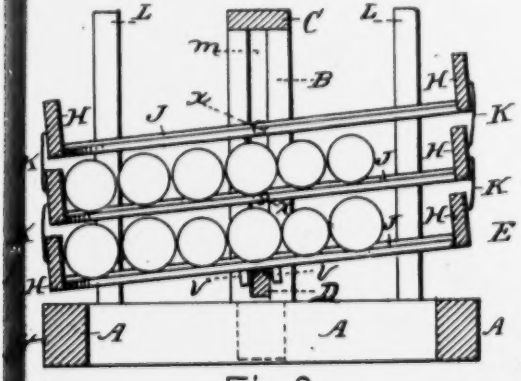

Fig. 3.

Inventor:
George Conant,
per C. C. Shaw,
Atty.

UNITED STATES PATENT OFFICE.

GEORGE CONANT, OF MARSHFIELD, MASSACHUSETTS.

DEVICE FOR PRESERVING EGGS.

SPECIFICATION forming part of Letters Patent No. 297,676, dated April 29, 1884.

Application filed October 5, 1883. (No model.)

To all whom it may concern:

Be it known that I, GEORGE CONANT, of Marshfield, in the county of Plymouth, State of Massachusetts, have invented a certain new and useful Improvement on Egg-Preservers, of which the following is a description sufficiently full, clear, and exact to enable any person skilled in the art or science to which said invention appertains to make and use the same, reference being had to the accompanying drawings, forming a part of this specification, in which—

Figure 1 is an isometrical perspective view representing my improved egg-preserver in use; Fig. 2, a vertical transverse section taken through the center of the standards, and Fig. 3 a vertical longitudinal section.

Like letters of reference indicate corresponding parts in the different figures of the drawings.

My invention relates to that class of egg-preservers in which the eggs are preserved by mechanical in contradistinction to chemical means; and it consists in a novel construction and arrangement of the parts, as hereinafter more fully set forth and claimed, by which a simpler, cheaper, and more effective device of this character is produced than is now in ordinary use.

The nature and operation of the improvement will be readily understood by all conversant with such matters from the following explanation, its extreme simplicity rendering an elaborate description unnecessary.

In the drawings, A represents the base or bed-piece of the machine, and B the uprights or standards. The standards are framed into the base, and connected at their upper ends by the cross-bar C, each one being provided on its inner face with a vertical longitudinal groove or slot, *m*.

Disposed in the lower part of the machine, between the standards, there is a cross-bar or fulcrum, D, and centrally arranged thereon is a rack, E, provided with downwardly-projecting pins *v*, to prevent it from sliding or moving out of position, but so arranged as to permit the rack to be freely tilted or rocked. This rack consists of the end pieces, H, connected by a series of rails or slats, J, the rails being beveled on their upper edges, as best seen in Fig. 2. The end pieces, H, are extended slightly above the rails, to prevent the eggs from rolling from the rack when the rack is tilted.

Two racks, F G, constructed in substantially the same manner as the rack E, are arranged above said last-named rack, their side rails being provided with pins *x*, which project into the slots *m*, and rest upon pins *d*, passing through the standards B, thereby centrally pivoting them and enabling them to be tilted or rocked in the same manner as the rack E. If preferred, all of the racks may be provided with pins *v* and bars D, the ends of the bars entering the slots *m*, and being supported on the pins *d*, or in any other suitable manner. A wire, K, is secured to the end pieces, H, in such a manner as to connect all of the racks, thereby enabling them to be tilted or rocked on their supports conjointly or in unison. It will be understood that the racks are not designed to be rotated or revolved, but simply tilted in either direction at a slight angle to the horizontal. When but one rack is used, the bed-piece A may serve as a stop to arrest the motion of the rack, or any other suitable stop may be employed. When several racks are connected one above another, the means for connecting them will not only cause them to tilt in unison, but will also serve to arrest their motion and hold them at a proper angle of inclination. A vertically-arranged standard L, is also provided at either corner of the bed-piece to assist in keeping the racks in proper position.

In the use of my improvement, the preserver or machine is placed in a cold apartment adapted for the purpose and filled with eggs, the eggs being placed so that they rest upon the contiguous beveled edges of the rails, with their axes at right angles to said rails, the rails being sufficiently near together to prevent the eggs from falling between them, and sufficiently far apart to admit of a circulation of air. When the eggs are placed in the machine in the manner described, they will rest side by side, and be arranged in rows, as best seen in Figs. 1 and 3, the rows being slightly separated, and each of the eggs in any particu-

lar row in contact with the adjoining eggs in the same row. The rows of eggs do not extend the entire distance between the end pieces, H, of the racks, a space being left at one end of each row corresponding as nearly as possible with half the circumference of an ordinary hen's egg, or, say, one and one-half inch, so that when the racks are tilted on their supports all of the eggs in each row will roll toward the lowest side of the rack, each egg performing a half-revolution, thereby being turned completely upside down before the traverse of the eggs is stopped by the lower egg in the row coming into contact with the lower end piece of the rack, it being understood that the racks are to be tilted to turn the eggs once a day, or as often as may be required to properly preserve them.

It will be obvious that when one end of the racks is elevated, as described, and the eggs caused to roll to the opposite side of the machine, the center of gravity in each rack will be thrown outside its center of motion, or between its pivotal support or fulcrum and its lowest end, thereby rendering it unnecessary to fasten the racks to keep them in a proper position after being tilted to turn the eggs.

I do not confine myself to connecting the racks by the wire K, as they may be connected by a rod or rods, or in any other convenient manner. Neither do I confine myself to the use of any special number of racks in a machine, or to beveling the edges of the rails J, or to the use of the standards L, or to constructing the racks of any special size, or to pivoting the racks precisely as described, as they may be supported and pivoted in such a manner as to be readily tilted by any suitable means for that purpose without departing from the spirit of my improvement.

Having thus explained my invention, what I claim is—

1. The combination of a supporting-frame, a tilting rack pivoted thereto, provided with rails at right angles to the axis on which the rack oscillates, said rails being a proper distance apart for the support of hens' eggs placed side by side between them, and means for arresting the rack at a slight incline to the horizontal in either direction to which it may be tilted, substantially as described.

2. The combination of the standards provided with vertical grooves and supporting-pins crossing the grooves at different heights, and oscillatory racks provided with pivot-pins adapted to rest within said grooves on said supporting-pins, said racks having rails at right angles to their axes of oscillation a proper distance apart for the support of eggs placed side by side between them, substantially as described.

3. The improved egg-preserver herein described, the same consisting of the base A, bar D, standards B, provided with the grooves *m*, and pins *d*, rack E, provided with the pins *v*, racks F G, provided with the pins *x*, and the wire K, constructed, combined, and arranged to operate substantially as set forth.

GEORGE CONANT.

Witnesses:
C. A. SHAW,
L. J. WHITE.

771 (Defendant's Exhibit P, Letters Patent No. 3
C. Bassini & A. Heyden, November 17, 188

he adjoining eggs in
s of eggs do not ex-
tween the end pieces,
eing left at one end
g as nearly as possi-
rence of an ordinary
nd one-half inch, so
tilted on their sup-
ach row will roll to-
the rack, each egg
ition, thereby being
le down before the
topped by the lower
nto contact with the
ack, it being under-
to be tilted to turn
often as may be re-
ve them.

when one end of the
cribed, and the eggs
osite side of the ma-
ity in each rack will
ter of motion, or be-
t or fulcrum and its
ering it unnecessary
ep them in a proper
l to turn the eggs.

lf to connecting the
hey may be connect-
any other convenient
onfine myself to the
er of racks in a ma-
edges of the rails J,
ndards L, or to con-
y special size, or to
sely as described, as

they may be supported and pivoted in such a manner as to be readily tilted by any suitable means for that purpose without departing from the spirit of my improvement.

Having thus explained my invention, what I claim is—

1. The combination of a supporting-frame, a tilting rack pivoted thereto, provided with rails at right angles to the axis on which the rack oscillates, said rails being a proper distance apart for the support of hens' eggs placed side by side between them, and means for arresting the rack at a slight incline to the horizontal in either direction to which it may be tilted, substantially as described.

2. The combination of the standards provided with vertical grooves and supporting-pins crossing the grooves at different heights, and oscillatory racks provided with pivot-pins adapted to rest within said grooves on said supporting-pins, said racks having rails at right angles to their axes of oscillation a proper distance apart for the support of eggs placed side by side between them, substantially as described.

3. The improved egg-preserver herein described, the same consisting of the base A, bar D, standards B, provided with the grooves *m*, and pins *d*, rack E, provided with the pins *v*, racks F G, provided with the pins *x*, and the wire K, constructed, combined, and arranged to operate substantially as set forth.

GEORGE CONANT.

Witnesses:
C. A. SHAW,
L. J. WHITE.

771 (Defendant's Exhibit P, Letters Patent No. 330,457 to C. Bassini & A. Heyden, November 17, 1885.)

C. BASSINI & A. HEYDEN.

INCUBATOR.

No. 330,457. Patented Nov. 17, 1885.

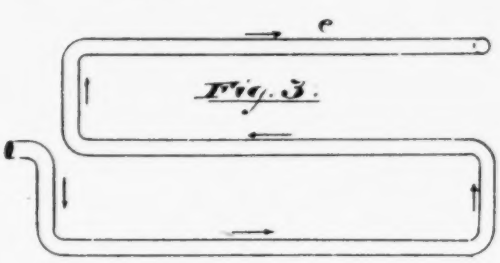

Fig. 3.

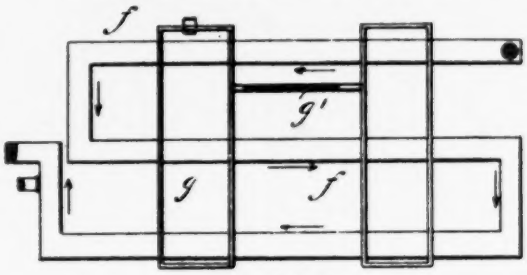

Fig. 4.

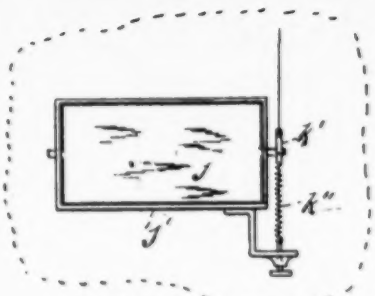

Fig. 6.

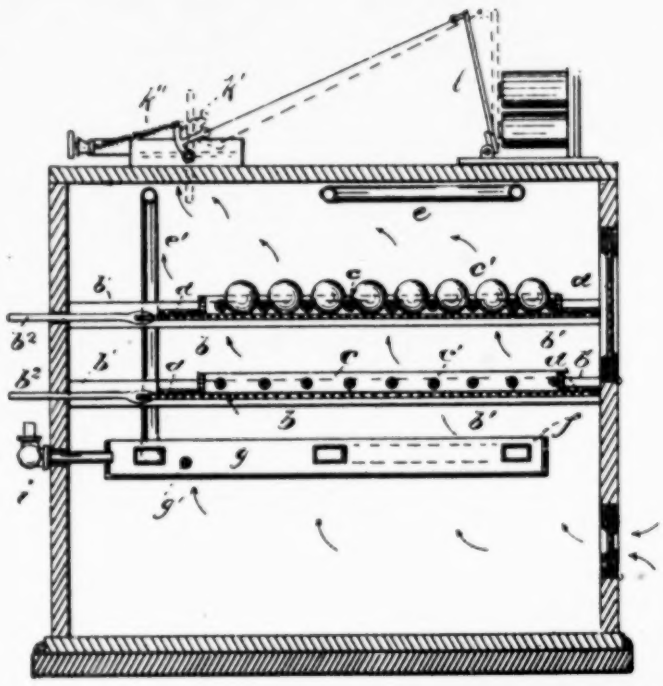

Fig. 5.

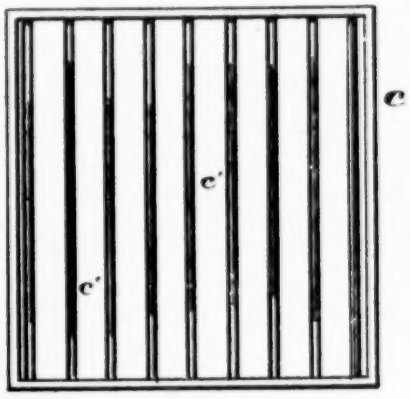

Fig. 7.

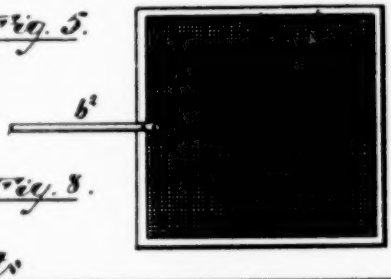

Fig. 8.

Attest:

Frdk. P. Campbell.
Fred. S. Adams

Inventors:

Charles Bassini,
Adolf Heyden,
by Drake & Co
Attys

626 (No Model.) 2 Sheets—Sheet 1.

C. BASSINI & A. HEYDEN.

INCUBATOR.

No. 330,457. Patented Nov. 17, 1885.

Fig. 1.

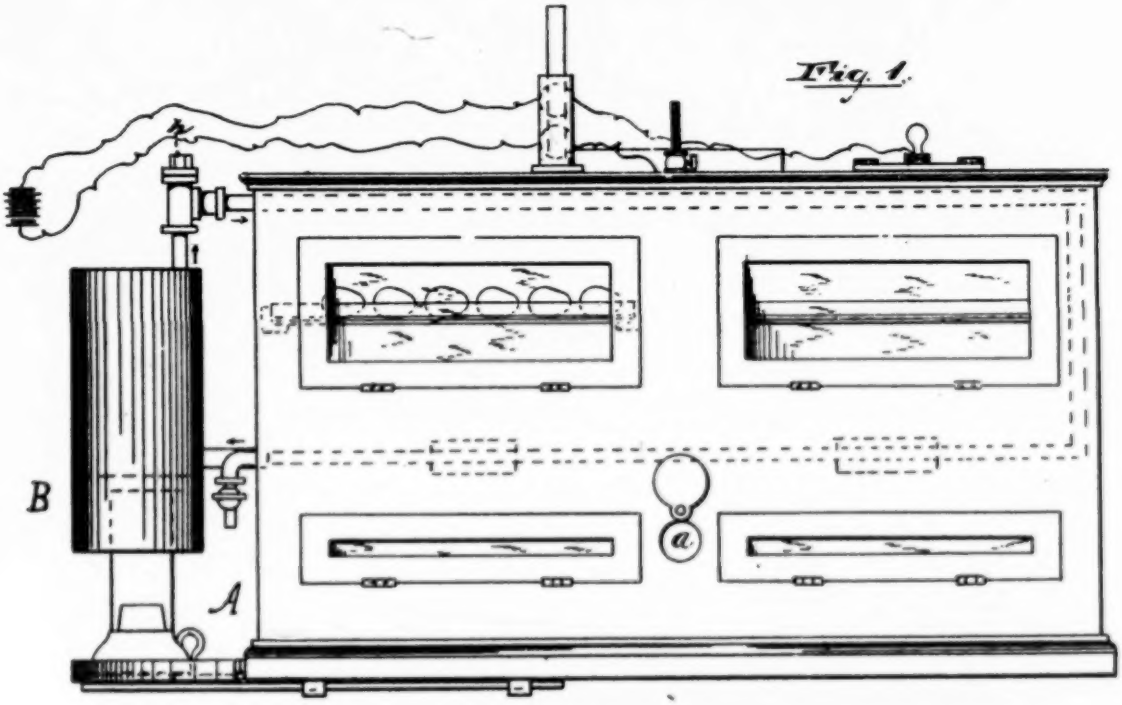

Fig. 2.

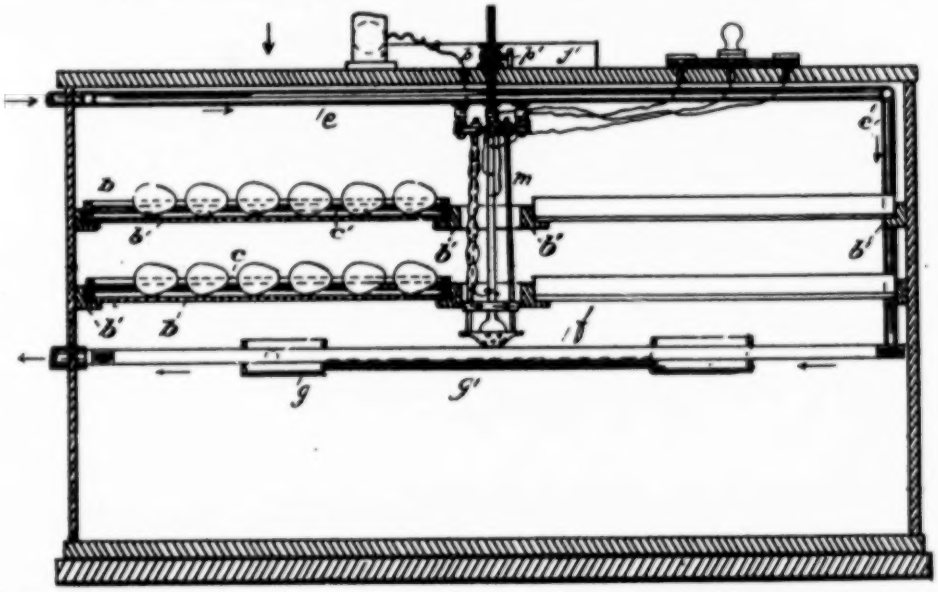

Attest:

Wm. F. Campbell.
Fred. S. Adams

Inventors:

Charles Bassini,
and Adolf Heyden,
by Drake & Co

UNITED STATES PATENT

CHARLES BASSINI, OF IRVINGTON, AND ADOLF HE
NEW JERSEY.

INCUBATOR.

SPECIFICATION forming part of Letters Patent No. 330,457, da

Application filed April 16, 1885. Serial No. 162,449. (No m

To all whom it may concern:

Be it known that we, CHARLES BASSINI and ADOLF HEYDEN, citizens of the United States, residing at Irvington and Newark, respectively, in the county of Essex and State of New Jersey, have invented certain new and useful Improvements in Incubators; and we do hereby declare the following to be a full, clear, and exact description of the invention, such as will enable others skilled in the art to which it appertains to make and use the same, reference being had to the accompanying drawings, and to letters of reference marked thereon, which form a part of this specification.

Our invention relates to incubators for the artificial hatching of chickens, &c.; and it consists more particularly in the improved mechanism for turning the eggs without necessitating access to the interior of the box, and in the novel construction and arrangement of the heating and air-moistening apparatus.

In the accompanying drawings, Figure 1 is a front elevation of an incubating box and boiler illustrating our invention. Fig. 2 is a longitudinal section of the same. Figs. 3 and 4 are plan views of the upper and lower heating-coils, respectively. Fig. 5 is a transverse section in the direction of *x* in Fig. 2. Fig. 6 is a plan view of the damper and adjacent mechanism. Fig. 7 is a plan view of an egg-receiving frame, and Fig. 8 is a similar view of one of the slides or tables.

Similar letters of reference indicate like parts.

A is the incubating box or chamber, provided with glass-paneled doors. In the front side of said box is an opening, *a*, for the admission of fresh air. Said opening is provided with a pivoted lid or cover, as shown. In large boxes several openings similar to *a* may be provided. In the top of the box A is arranged a damper, *j*, which when opened allows of the escape of the warm air from the box. Inside the box are secured grooved ways, *b'*, which support and in which move the slides or tables *b*. Each slide is provided with a rod, *b²*, which extends through the back of the box. By means of this rod the slide may be conveniently reciprocated in its ways. Above each of the slides *b* is an egg-receiving frame, *c*, gular frame-work bars, or partitions. the slide beneath it vented from movi or strips, *d*, whic tionary position. made of wire, an in rear of the fra box A at their en the spaces betwe the frames *c*, and meet the upper su the slides *b* are rec eggs are thereby t are supported by titions of the fra with their whole

We are aware t placed between th and caused to rest whereby they ar gresses, the frame carried along by t tion the whole we web, and, as some ers, this weight i web then sinks than in others, an unevenly rotated, along by the web contact with thei the web is moved. device is that the sisted by the wei upon it.

Inasmuch as th will prevent the ceedingly impor that the mecha should move freel all the eggs shoul shocks.

By our inventi are secured and wholly avoided. frame support t body of the egg p ficiently to make the slide in movi

We find it pr

2 Sheets—Sheet 1.

C. BASSINI & A. HEYDEN.

INCUBATOR.

Patented Nov. 17, 1885.

Fig. 1.

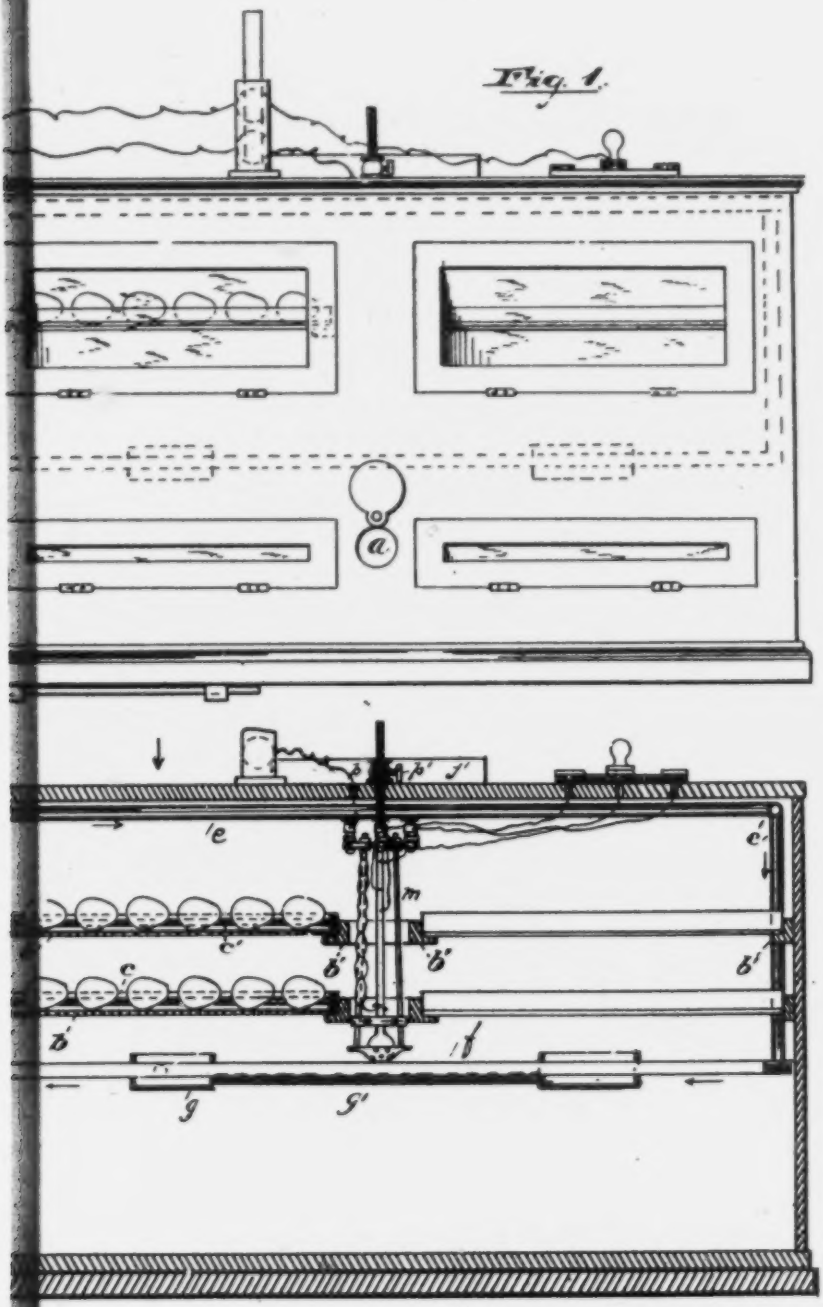

Inventors:

Charles Bassini,
and Adolf Heyden,
by Drake & Co

CHARLES BASSINI, OF IRVINGTON, AND ADOLF HEYDEN, OF NEWARK, NEW JERSEY.

INCUBATOR.

SPECIFICATION forming part of Letters Patent No. 330,457, dated November 17, 1885.

Application filed April 16, 1885. Serial No. 162,449. (No model.)

To all whom it may concern:

Be it known that we, CHARLES BASSINI and ADOLF HEYDEN, citizens of the United States, residing at Irvington and Newark, respectively, in the county of Essex and State of New Jersey, have invented certain new and useful Improvements in Incubators; and we do hereby declare the following to be a full, clear, and exact description of the invention, such as will enable others skilled in the art to which it appertains to make and use the same, reference being had to the accompanying drawings, and to letters of reference marked thereon, which form a part of this specification.

Our invention relates to incubators for the artificial hatching of chickens, &c.; and it consists more particularly in the improved mechanism for turning the eggs without necessitating access to the interior of the box, and in the novel construction and arrangement of the heating and air-moistening apparatus.

In the accompanying drawings, Figure 1 is a front elevation of an incubating box and boiler illustrating our invention. Fig. 2 is a longitudinal section of the same. Figs. 3 and 4 are plan views of the upper and lower heating-coils, respectively. Fig. 5 is a transverse section in the direction of *x* in Fig. 2. Fig. 6 is a plan view of the damper and adjacent mechanism. Fig. 7 is a plan view of an egg-receiving frame, and Fig. 8 is a similar view of one of the slides or tables.

Similar letters of reference indicate like parts.

A is the incubating box or chamber, provided with glass-paneled doors. In the front side of said box is an opening, *a*, for the admission of fresh air. Said opening is provided with a pivoted lid or cover, as shown. In large boxes several openings similar to *a* may be provided. In the top of the box A is arranged a damper, *j*, which when opened allows of the escape of the warm air from the box. Inside the box are secured grooved ways, *b'*, which support and in which move the slides or tables *b*. Each slide is provided with a rod, *b²*, which extends through the back of the box. By means of this rod the slide may be conveniently reciprocated in its ways. Above each of the slides *b* is an egg-receiving frame, *c*, which consists of a rectangular frame-work having transverse slats, bars, or partitions. Said frame may rest upon the slide beneath it, as is here shown, but is prevented from moving with said slide by bars or strips, *d*, which secure said frame in stationary position. The bars *d* are preferably made of wire, and are arranged in front and in rear of the frame *c*, and are attached to the box A at their ends. The eggs are placed in the spaces between the bars or partitions of the frames *c*, and hence their lower portions meet the upper surfaces of the slides *b*. When the slides *b* are reciprocated in their ways, the eggs are thereby turned or rotated. The eggs are supported by the transverse bars or partitions of the frames *c*, so that they do not rest with their whole weight on the slides.

We are aware that eggs have hitherto been placed between the bars of a stationary frame and caused to rest upon a moving web beneath, whereby they are turned as the web progresses, the frame preventing the eggs being carried along by the web. By this construction the whole weight of the eggs rests on the web, and, as some eggs are heavier than others, this weight is unequally disposed. The web then sinks down more in some places than in others, and the eggs become displaced, unevenly rotated, and, besides, are carried along by the web and brought into jarring contact with their retaining-bars whenever the web is moved. Another difficulty of this device is that the movement of the web is resisted by the weight of all the eggs resting upon it.

Inasmuch as the smallest crack in the shell will prevent the hatching of an egg, it is exceedingly important in devices of this sort that the mechanism for turning the eggs should move freely and easily, and that above all the eggs should not be subjected to jars or shocks.

By our invention the above requirements are secured and the difficulties mentioned wholly avoided. The transverse bars of our frame support the weight of the egg. The body of the egg protrudes below the slats sufficiently to make contact with the slide, and the slide in moving turns the eggs.

We find it preferable to make the slides

with roughened or corrugated surfaces, and also to form holes through them so as to allow free circulation of air to the eggs. In practice we find wire cloth or netting to be well adapted for this purpose, inasmuch as it is sufficiently rough to engage with and easily move the eggs, while it also allows free circulation of the heated air through its meshes.

Referring now more particularly to the heating apparatus, B is a boiler arranged outside the box A, and heated by a lamp or any other suitable means. Connected with the upper portion of said boiler, and arranged in the upper portion of the box, is a coil of tubes, *e*. Connected with the lower part of the boiler, and disposed in the lower part of the box, is a coil of tubes, *f*. The two coils *e* and *f* communicate by a vertical tube, *e'*.

The egg-receiving devices above described are disposed between the coils *e* and *f*. In said coils there is a constant circulation of water from the boiler, and hence heat is radiated from them, and by this means the air within the box A is suitably warmed.

We find it especially advantageous to employ coils of tubes in lieu of tanks or other large receptacles for the hot water and steam, because a better circulation is obtained, their contents are more quickly heated, they occupy less space in the box, they are not so liable to become leaky by expansion and contraction, they are more easily got at and removed for repair, they allow of circulation of air between the tubes and hence of unobstructed draft between air inlet and outlet, they are cheaper in construction, and by actual experiment we find that the warmth diffused is much more equable and uniform.

In order to render the heated air properly moist, we provide open pans *g*, which are placed in the lower part of the box. Through these pans pass the tubes of the lower coil, *f*. The pans are filled with water, which is slowly evaporated by the heat obtained from the warm tubes passing through it. The vapor thus generated thoroughly and uniformly moistens the air in the box.

It is well known that the temperature within an incubating-box must be steadily maintained at certain points, and that it should range between 104° Fahrenheit at the beginning of the incubation to 98° Fahrenheit at the end.

In order properly to regulate the temperature in our device, we arrange in connection with the damper *j* an electrical thermostat, which when the degree of temperature in the box rises unduly opens the damper, and on a lowering of the temperature causes the damper to close. When the damper is open, the heated air escapes, and the aperture *a* in the lower part of the case also being open cold air is free to enter.

The heat-regulating contrivance which we preferably employ comprises a mercurial thermometer, *m*, which acts as a circuit-closer when the mercury in rising reaches certain predetermined points, and so establishes a current from a battery through an electro-magnet, energizing the latter and causing it to attract its armature *l*.

From Figs. 5 and 6 it will be seen that the damper is journaled in a frame, *j'*, and provided at one end with an arm, *k'*, which is connected to the armature *l*. Said arm is also provided with a spring, *k''*. The armature when attracted by the electro-magnet opens the damper, and when the armature is released the damper is closed by the action of the spring *k''*.

We do not limit ourselves to the use of the particular electrical heat-regulator here shown in connection with the damper of our incubator; neither do we herein claim the construction and arrangement of the heat-regulating device above described, because the same is fully set forth and claimed by us in another application for Letters Patent No. 172,270, filed July 22, 1885.

Referring now to the particular arrangement and construction of an incubator, it will be seen that we arrange our egg-receptacles between the heating-coils, and hence in the place where there is most uniform heat; also, that our open water-vessels *g* are placed in the lower part of the box, and are traversed by the lower coils. Being directly below the eggs, the moisture from said vessels rising of course meets the eggs. We place our air-inlet below the lower coil and also below the water-vessels so that the incoming cold air is not only warmed by contact with the lower coil, but is also moistened by meeting the vapor rising from the open vessels before it encounters the eggs. In this way we prevent sudden chilling drafts and like abrupt variations of temperature. Our damper, on the other hand, is placed above the top coils, and hence is in the best position to carry off the heated air. It will be seen, therefore, that in operation the fresh-air supply enters at the air-inlet, thence passes around the first or lower heating-coil and over the moistening-pans, thence to and around the eggs, thence to and around the upper or second heating device, and then through the damper if the latter be open.

We claim as our invention—

1. In an incubator, the combination of a horizontally-reciprocating slide and a stationary frame supported above said slide, provided with transverse slats or bars, between and upon which bars the eggs are received and supported, substantially as described.

2. In an incubator, the combination of the incubator-box provided with air-inlets, an egg-receptacle therein supported upon a perforated reciprocating slide, a boiler or heater, heating-coils in said box above and below said egg-receptacle, connecting-pipes *e'*, damper *j*, and means for automatically opening said damper.

3. In an incubator, the combination, with the incubator-box provided with air-inlet *a* and damper *j*, of the upper and lower heating-

coils, *e f*, connecting-pipes *e'*, and an open water-vessel, *g*, through which the lower coils, *f*, pass, substantially as described.

4. In an incubator, the combination of an incubating-box, egg-receptacles therein supported upon reciprocating perforated slides, an open water-vessel, and heating coils or pipes passing through said vessel, substantially as described.

5. An incubator consisting of an incubating-box provided with air-inlet *a*, and damper *j*, egg-receptacles on said box supported above reciprocating perforated slides, a boiler or heater, upper co
ing-pipes *e'*, and
which the lowe
combined substa

In testimony t
have hereunto s
April, 1885.

Witnesses:
FREDERIC
OSCAR A.

ated surfaces, and
h them so as to al-
to the eggs. In
h or netting to be
ose, inasmuch as it
ge with and easily
o allows free circu-
rough its meshes.
articularly to the
oiler arranged out-
d by a lamp or any
nected with the up-
nd arranged in the
s a coil of tubes, *c*.
part of the boiler,
part of the box, is a
coils *e* and *f* com-
e, *e'*.
es above described
oils *e* and *f*. In said
irculation of water
ce heat is radiated
eans the air within
ned.
dvantageous to em-
of tanks or other
t water and steam,
n is obtained, their
eated, they occupy
are not so liable to
n and contraction,
t and romoved for
culation of air be-
ce of unobstructed
nd outlet, they are
and by actual ex-
warmth diffused is
niform.
eated air properly
pans *g*, which are
the box. Through
of the lower coil, *f*.
ter, which is slowly
obtained from the
gh it. The vapor
ly and uniformly
x.
temperature with-
t be steadily main-
and that it should
nheit at the begin-
98° Fahrenheit at

ulate the tempera-
range in connection
ctrical thermostat,
temperature in the
e damper, and on a
re causes the damp-
amper is open, the
e aperture *a* in the
being open cold air

ntrivance which we
ses a mercurial ther-
as a circuit-closer
ng reaches certain
predetermined points, and so establishes a current from a battery through an electro-magnet, energizing the latter and causing it to attract its armature *l*.

From Figs. 5 and 6 it will be seen that the damper is journaled in a frame, *j'*, and provided at one end with an arm, *k'*, which is connected to the armature *l*. Said arm is also provided with a spring, *k''*. The armature when attracted by the electro-magnet opens the damper, and when the armature is released the damper is closed by the action of the spring *k''*.

We do not limit ourselves to the use of the particular electrical heat-regulator here shown in connection with the damper of our incubator; neither do we herein claim the construction and arrangement of the heat-regulating device above described, because the same is fully set forth and claimed by us in another application for Letters Patent No. 172,270, filed July 22, 1885.

Referring now to the particular arrangement and construction of an incubator, it will be seen that we arrange our egg-receptacles between the heating-coils, and hence in the place where there is most uniform heat; also, that our open water-vessels *g* are placed in the lower part of the box, and are traversed by the lower coils. Being directly below the eggs, the moisture from said vessels rising of course meets the eggs. We place our air-inlet below the lower coil and also below the water-vessels so that the incoming cold air is not only warmed by contact with the lower coil, but is also moistened by meeting the vapor rising from the open vessels before it encounters the eggs. In this way we prevent sudden chilling drafts and like abrupt variations of temperature. Our damper, on the other hand, is placed above the top coils, and hence is in the best position to carry off the heated air. It will be seen, therefore, that in operation the fresh-air supply enters at the air-inlet, thence passes around the first or lower heating-coil and over the moistening-pans, thence to and around the eggs, thence to and around the upper or second heating device, and then through the damper if the latter be open.

We claim as our invention—

1. In an incubator, the combination of a horizontally-reciprocating slide and a stationary frame supported above said slide, provided with transverse slats or bars, between and upon which bars the eggs are received and supported, substantially as described.

2. In an incubator, the combination of the incubator-box provided with air-inlets, an egg-receptacle therein supported upon a perforated reciprocating slide, a boiler or heater, heating-coils in said box above and below said egg-receptacle, connecting-pipes *e'*, damper *j*, and means for automatically opening said damper.

3. In an incubator, the combination, with the incubator-box provided with air-inlet *a* and damper *j*, of the upper and lower heating-

coils, *e f*, connecting-pipes *e'*, and an open water-vessel, *g*, through which the lower coils, *f*, pass, substantially as described.

4. In an incubator, the combination of an incubating-box, egg-receptacles therein supported upon reciprocating perforated slides, an open water-vessel, and heating coils or pipes passing through said vessel, substantially as described.

5. An incubator consisting of an incubating-box provided with air-inlet *a*, and damper *j*, egg-receptacles on said box supported above reciprocating perforated slides, a boiler or heater, upper coils, *e*, lower coils, *f*, connecting-pipes *e'*, and open water-vessels through which the lower coils pass, the parts being combined substantially as described.

In testimony that we claim the foregoing we have hereunto set our hands this 11th day of April, 1885.

CHARLES BASSINI.
ADOLF HEYDEN.

Witnesses:
FREDERICK F. CAMPBELL,
OSCAR A. MICHEL.

778 (Defendants' Exhibit P, Letters Patent No. 344,474 to J. W. Campbell, June 29, 1886.)

632 (No Model.) 2 Sheets—Sheet 2.

J. W. CAMPBELL.

HEAT REGULATING ATTACHMENT FOR INCUBATORS.

No. 344,474. Patented June 29, 1886.

Fig. 3.

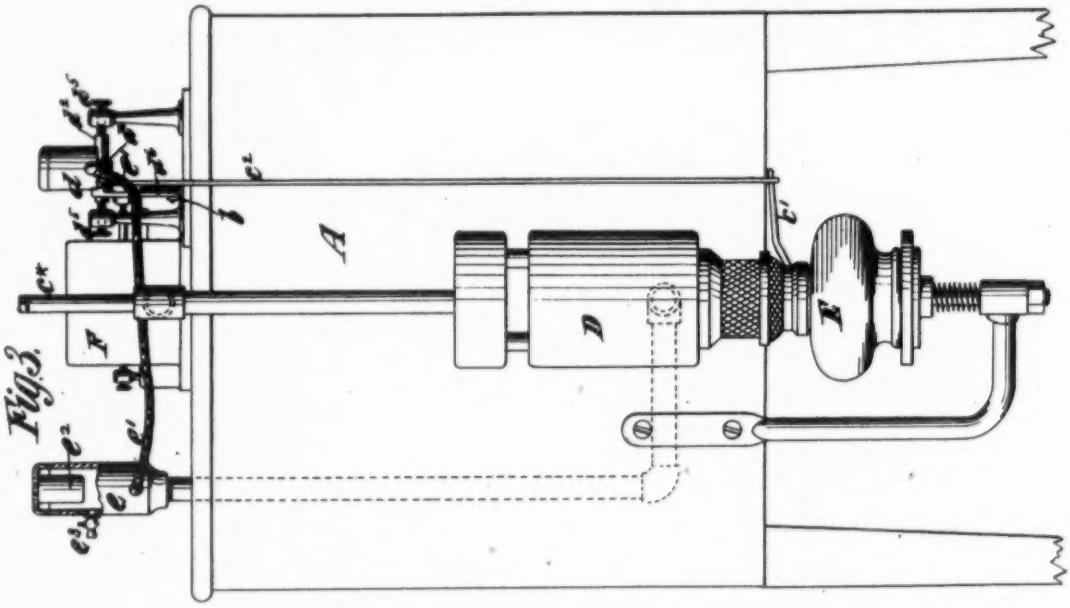

Fig. 2.

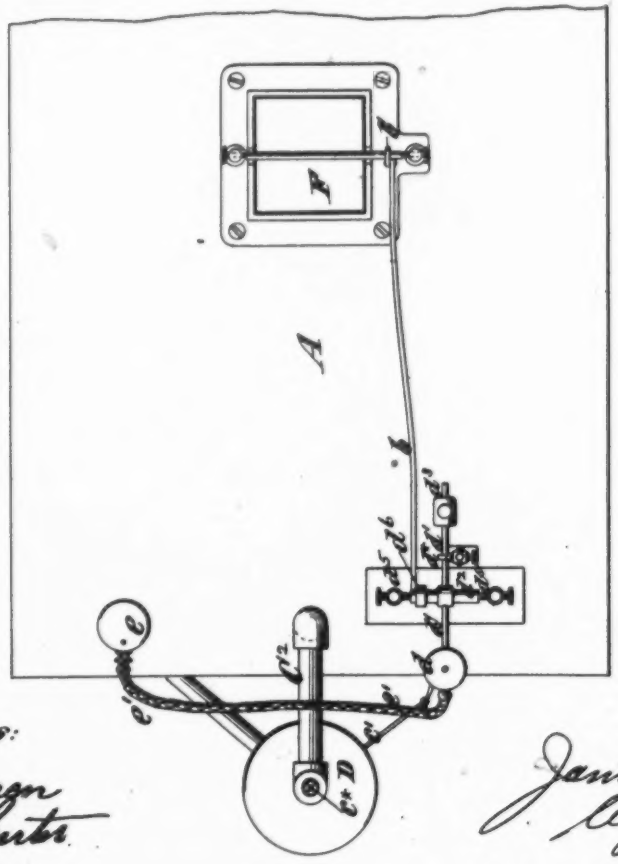

Witnesses:
C. Sundgren
Emil Hunter

Inventor:
James W. Campbell
by his attys
Brown & Hall

634 (No Model.) 2 Sheets—Sheet 1.

J. W. CAMPBELL.

HEAT REGULATING ATTACHMENT FOR INCUBATORS.

No. 344,474. Patented June 29, 1886.

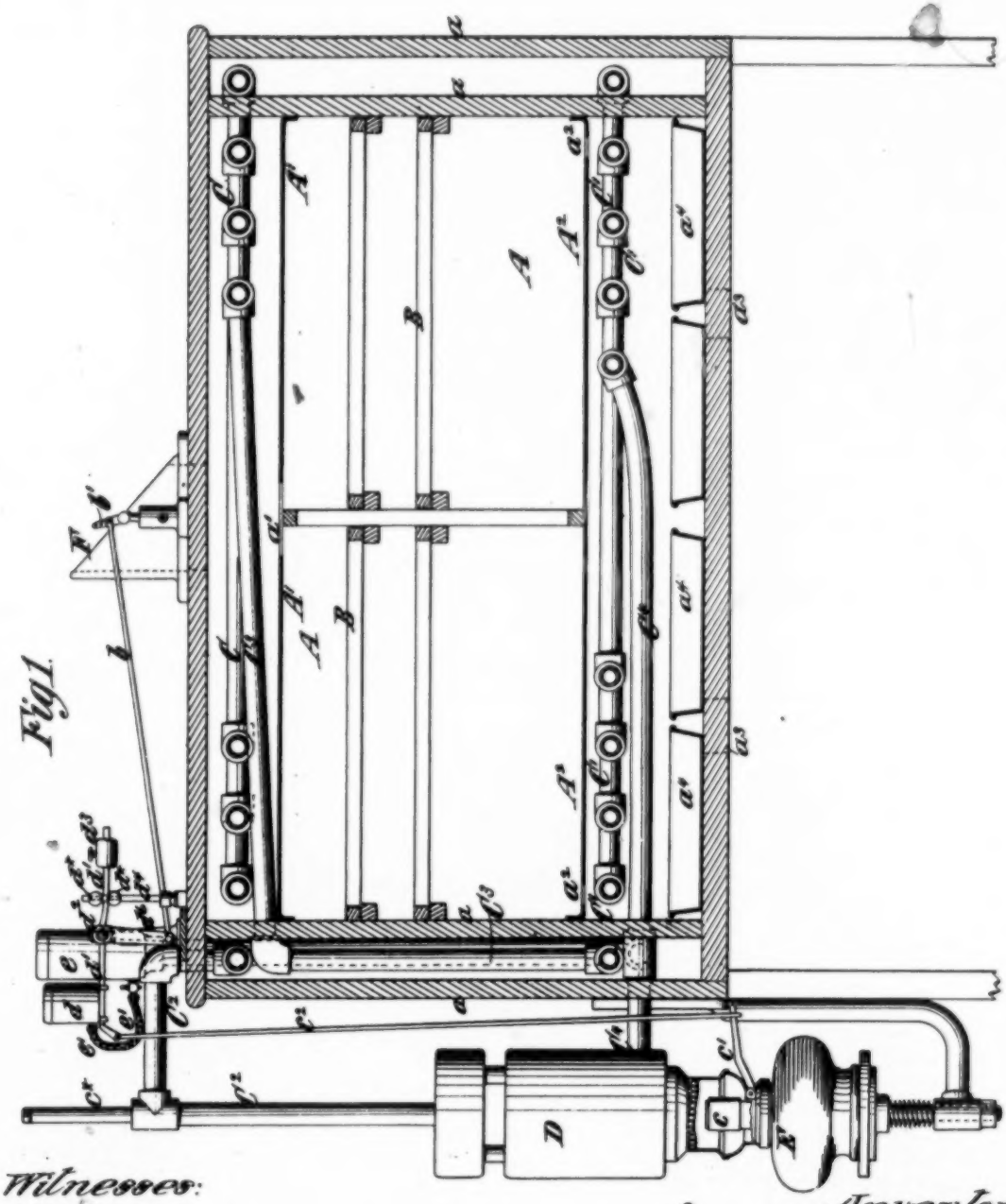

Fig 1.

Witnesses:
C. L. Sundgren
Emil Hunter

Inventor.
James W. Campbell
by his Attys
Brown & Hall

UNITED STATES PATEN

JAMES W. CAMPBELL, OF GERMANTOWN

HEAT-REGULATING ATTACHMENT FO

SPECIFICATION forming part of Letters Patent No. 344,

Application filed March 6, 1886. Serial No. 194,205. (N

To all whom it may concern:

Be it known that I, JAMES W. CAMPBELL, of Germantown, in the county of Columbia and State of New York, have invented a new and useful Improvement in Heat-Controlling Attachments for Incubators, of which the following is a specification.

My invention relates more particularly to incubators, in which the egg-chamber is heated by means of a water-heater and a system of circulating-pipes, comprising heating-coils arranged in the upper and lower parts of the incubator-chamber.

The water-heater has been heretofore heated by means of a lamp or oil-burner having a flame-controlling device adjustable relatively to the wick-tube, and by this device the amount of heat imparted to the water is controlled.

The object of my invention is to provide for properly operating either the ventilator at the top of the incubator or the heat-controlling device of the water-heater, or both these parts, by means of the expansion of the water in the heater and system of circulating-pipes.

In order to utilize the excessive expansion of the water in the heating system when unduly heated for operating the ventilator and the heat-controlling device, I employ a balance carrying a water-chamber, which is in constant communication through a flexible tube with the circulating system, and which is arranged just above the level of liquid in the circulating system, that liquid being heated to the desired degree.

This chamber, on the liquid or water rising into it by undue expansion, will fall, and thereby shift the ventilator and the heat-controlling device, either or both. I prefer to mount the water-chamber on one end of the beam, which is weighted on the other end, and connect it with a water-reservoir which surmounts the system of circulating-pipes, and which has its upper portion contracted in area, so that the balanced chamber will not receive a large volume of water when it falls, by reason of the small quantity of water entering it.

In the accompanying drawings, Figure 1 is a vertical section of an incubator having my attachments applied thereto. Fig. 2 is a plan thereof; and Fig. 3 is an end view showing the water-reservoi
chamber is sup
Similar letter
sponding parts
A designates
double walls *a*,
for eggs.
C C are upper
with the heate
system. The w
E, and is condu
per heating-coil
lower heating-c
C', to the heate
A' A² are baff
below the uppe
lower heating c
openings *a' a²*.
In the bottom
openings *a³* and
the air.
At the top o
have represente
may be swung
rod, *b*, connecte
ots of the vent
the heat to whi
jected I have re
vided with a fl
device, *c*, which
a rod, *c²*, may b
and the heat pr
employ means
the heat-control
both of them, be
rising into a ba
in the system o
heated. As her
a balanced water
upon a beam or
having an adjust
end opposite the
also shown the
surmounted by
connected by a fl
balanced water-c
or lever *d'* oper
which are adjust
different distanc
The pivot *d²* of t

2 Sheets—Sheet 1.

J. W. CAMPBELL.

REGULATING ATTACHMENT FOR INCUBATORS.

Patented June 29, 1886.

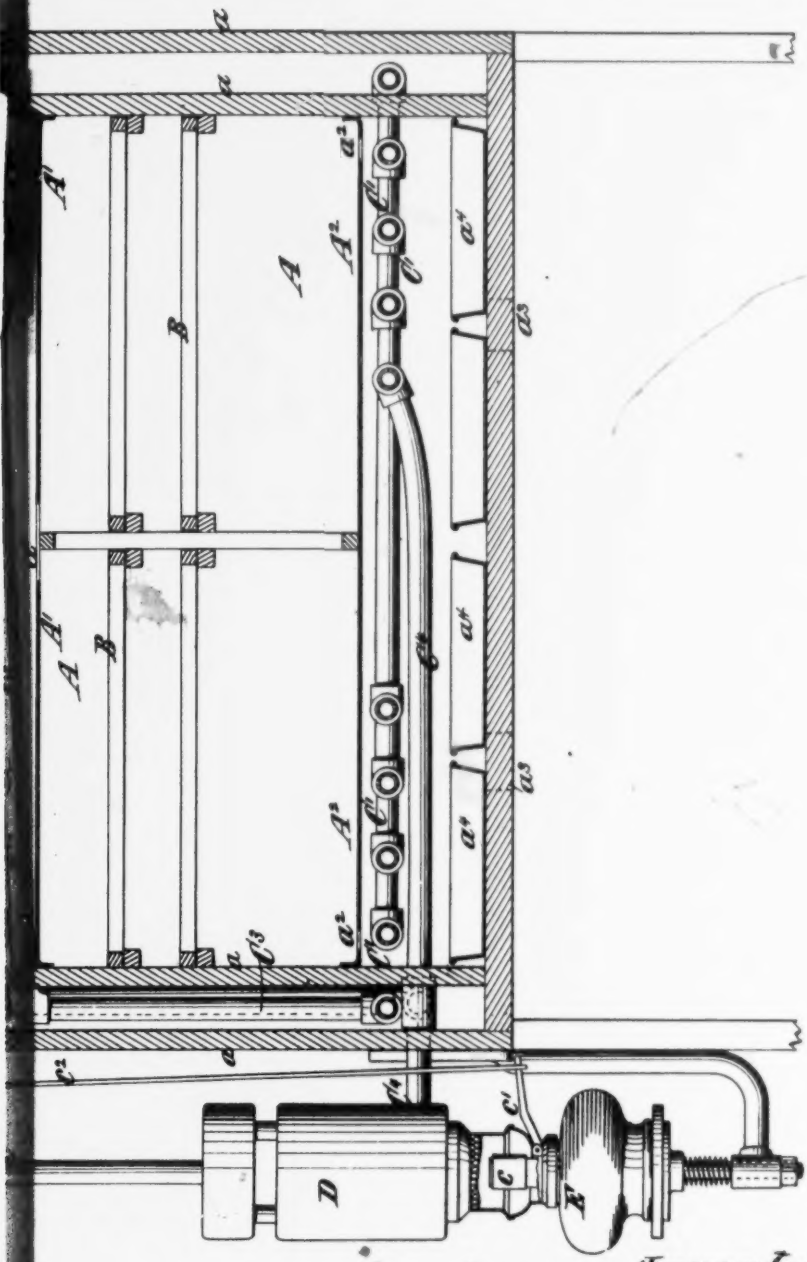

Witnesses:

Inventor:
James W. Campbell
by his Attys
Brown & Hall

UNITED STATES PATENT OFFICE.

JAMES W. CAMPBELL, OF GERMANTOWN, NEW YORK.

HEAT-REGULATING ATTACHMENT FOR INCUBATORS.

SPECIFICATION forming part of Letters Patent No. 344,474, dated June 29, 1886.

Application filed March 6, 1886. Serial No. 194,205. (No model.)

To all whom it may concern:

Be it known that I, JAMES W. CAMPBELL, of Germantown, in the county of Columbia and State of New York, have invented a new and useful Improvement in Heat-Controlling Attachments for Incubators, of which the following is a specification.

My invention relates more particularly to incubators, in which the egg-chamber is heated by means of a water-heater and a system of circulating-pipes, comprising heating-coils arranged in the upper and lower parts of the incubator-chamber.

The water-heater has been heretofore heated by means of a lamp or oil-burner having a flame-controlling device adjustable relatively to the wick-tube, and by this device the amount of heat imparted to the water is controlled.

The object of my invention is to provide for properly operating either the ventilator at the top of the incubator or the heat-controlling device of the water-heater, or both these parts, by means of the expansion of the water in the heater and system of circulating-pipes.

In order to utilize the excessive expansion of the water in the heating system when unduly heated for operating the ventilator and the heat-controlling device, I employ a balance carrying a water-chamber, which is in constant communication through a flexible tube with the circulating system, and which is arranged just above the level of liquid in the circulating system, that liquid being heated to the desired degree.

This chamber, on the liquid or water rising into it by undue expansion, will fall, and thereby shift the ventilator and the heat-controlling device, either or both. I prefer to mount the water-chamber on one end of the beam, which is weighted on the other end, and connect it with a water-reservoir which surmounts the system of circulating-pipes, and which has its upper portion contracted in area, so that the balanced chamber will not receive a large volume of water when it falls, by reason of the small quantity of water entering it.

In the accompanying drawings, Figure 1 is a vertical section of an incubator having my attachments applied thereto. Fig. 2 is a plan thereof; and Fig. 3 is an end view showing the water-reservoir, from which the balanced chamber is supplied, partly in section.

Similar letters of reference designate corresponding parts in the several figures.

A designates the incubator-chamber having double walls *a*, and within which are trays B for eggs.

C C′ are upper and lower heating coils, which, with the heater D, form a water-circulating system. The water may be heated by a lamp, E, and is conducted by a pipe, C^2, to the upper heating-coil, C, thence by a pipe, C^3, to the lower heating-coil, C′, and thence by a pipe, C^1, to the heater D.

A′ A^2 are baffle-plates or deflectors arranged below the upper heating coil and above the lower heating coil, and having, respectively, openings a' a^2.

In the bottom of the chamber are air-inlet openings a^3 and water-pans a^1, for moistening the air.

At the top of the incubator-chamber A, I have represented a hinged ventilator, F, which may be swung upon its pivots by means of a rod, *b*, connected with an arm, *b′*, on the pivots of the ventilator, and in order to control the heat to which the water-heater D is subjected I have represented the lamp E as provided with a flame regulator or controlling device, *c*, which, by means of a lever, *c′*, and a rod, c^2, may be shifted to control the flame and the heat produced by the lamp. I also employ means whereby the ventilator F and the heat-controlling device *c* may, either or both of them, be shifted by the weight of water rising into a balanced vessel when the water in the system of circulating-pipes is unduly heated. As here represented, I have shown a balanced water-chamber, *d*, which is mounted upon a beam or lever, *d′*, fulcrumed at d^2, and having an adjustable weight, d^3, applied to the end opposite the vessel or chamber *d*. I have also shown the system of circulating-pipes as surmounted by a water-reservoir, *e*, which is connected by a flexible pipe or tube, *e′*, with the balanced water-chamber *d*. The balance beam or lever *d′* operates between two stops, d^4, which are adjustable upward and downward at different distances apart upon a standard, d^5. The pivot d^2 of the beam *d′* may be supported

by pivot-screws d^2, as best shown in Figs. 2 and 3, and it has an arm, d^4, with which the rod *b*, for controlling the ventilator F, is connected, and the rod c^3, which serves to move the heat-controlling device, is also connected with the extremity of the lever or beam d'. The upper part of the water-reservoir *e* should be greatly contracted in area, for a purpose hereinafter described, and in Fig. 3 I have represented this contraction as produced by a downwardly-extending projection, e^3, on the cap which closes the upper end of the reservoir *e*. When the water becomes unduly heated and the temperature in the incubator-chamber approaches the maximum limit, the great expansion of water will cause a volume of water to flow into the balance-chamber *d* sufficient to overcome the weight d^3 and to cause the chamber to fall, thereby shifting the flame-controlling device *c*, and also opening the ventilator. It will be understood that the water rises to a considerable height in the water-reservoir *e* before it enters the balance-chamber *d*, and hence, as the balance-chamber falls by the increment of weight due to the volume of water entering it, a larger volume of water will flow into the chamber *d* and hold it down for a longer time than is desired. To prevent a too great increment of water into the chamber *d* when it thus falls, I contract the upper part of the water-reservoir *e*, so that after the water rises therein to the bottom of the plug or projection e^2 a further rise will represent but a very small volume of water, and these parts should be so arranged that the bottom of the plug or projection e^2 will be on about a level with the bottom of the balance water-chamber *d* when the latter is in its lowest position. If it is desired to change the degree of heat in the incubator-chamber, it may be accomplished by adding a small quantity of water through the pipe c^*, which surmounts the system of circulating-pipes, or by drawing off a small quantity of water through the cock e^3. If it is desired to maintain a less degree of heat in the incubator-chamber, a small quantity of water may be added through the pipe c^*; but if it be desired to increase the temperature of the chamber a suitably-small quantity of water may be drawn off through the cock e^3.

I am aware that heat-controlling devices for incubators and ventilators for other purposes have been controlled by the expansion of air or vapor of liquid under excess of heat acting upon mercury to operate a balance, and hence do not claim such device as of my invention. In my incubator I employ a closed circulating system for heating, and a water vessel or chamber, *d*, which is in constant communication with said circulating system, is arranged at such a height that when the desired heat is not exceeded the chamber *d* will receive no water; but when the desired temperature is exceeded the chamber will receive an increment of water by reason of expansion of the water in the circulating system, and the chamber, by the addition of the water to its weight, will fall and move the balance-beam d'.

What I claim as my invention, and desire to secure by Letters Patent, is—

1. The combination, with a ventilator or heat-controlling device of an incubator, a water-heater, and a system of circulating-pipes for heating the incubator, of a balanced water-chamber in closed and constant communication with the circulating system, and arranged just above the level of water in the system, said water being heated to the desired degree, and into which water from the system will flow on being expanded by excess of heat, and connections through which the ventilator or heat-controlling device will be shifted by the downward movement of such water-chamber on said water rising thereinto, substantially as herein described.

2. The combination, with a ventilator or heat-controlling device of an incubator, a water-heater, and a system of circulating pipes for heating the incubator, of a weighted beam carrying a water-chamber which has a constant communication through a flexible tube with the circulating system, and is arranged just above the level of water in the system, said water being heated to the desired degree, and a connection between said beam and the ventilator or heat-controlling device, whereby said ventilator or heat-controlling device will be shifted on said water rising into the water-chamber by undue expansion produced by excess of heat, substantially as herein described.

3. The combination, with the ventilator or heat-controlling device of an incubator, of a water-heater and a system of circulating-pipes for heating the same, a water-reservoir, *e*, surmounting the system of pipes, and having the water-space in its upper portion contracted, and a balance supporting a water-chamber connected flexibly with the water-reservoir, and itself connected with the ventilator or heat-controlling device, substantially as herein described.

JAMES W. CAMPBELL.

Witnesses:
LEWIS E. DICK,
CLAUDIUS ROCKEFELLER.

784 (Defendants' Exhibit P, Letters Patent No. 55
T. R. C. Christianson, May 5, 1896.)

rews d^5, as best shown in Figs. 2 it has an arm, d^6, with which the ntrolling the ventilator F, is con- the rod c^3, which serves to move ntrolling device, is also connected remity of the lever or beam d'. The of the water-reservoir e should be tracted in area, for a purpose here- ribed, and in Fig. 3 I have repre- contraction as produced by a down- ending projection, e^3, on the cap s the upper end of the reservoir he water becomes unduly heated perature in the incubator-cham- hes the maximum limit, the great f water will cause a volume of wa- into the balance-chamber d suffi- rcome the weight d^5 and to cause to fall, thereby shifting the flame- levice c, and also opening the ven- will be understood that the water onsiderable height in the water- before it enters the balance-cham- hence, as the balance-chamber increment of weight due to the ater entering it, a larger volume flow into the chamber d and hold a longer time than is desired. a too great increment of water mber d when it thus falls, I con- per part of the water-reservoir e, the water rises therein to the bot- lug or projection e^2 a further rise t but a very small volume of wa- e parts should be so arranged that of the plug or projection e^3 will a level with the bottom of the r-chamber d when the latter is t position. If it is desired to degree of heat in the incubator- may be accomplished by adding a ty of water through the pipe c^*, unts the system of circulating- drawing off a small quantity of h the cock e^3. If it is desired to ss degree of heat in the incubator- small quantity of water may be gh the pipe c^*; but if it be de- ease the temperature of the cham- y-small quantity of water may be rough the cock e^3.

e that heat-controlling devices for nd ventilators for other purposes ontrolled by the expansion of air liquid under excess of heat acting y to operate a balance, and hence such device as of my invention. ator I employ a closed circulating heating, and a water vessel or chamber, d, which is in constant communication with said circulating system, is arranged at such a height that when the desired heat is not exceeded the chamber d will receive no water; but when the desired temperature is exceeded the chamber will receive an increment of water by reason of expansion of the water in the circulating system, and the chamber, by the addition of the water to its weight, will fall and move the balance-beam d'.

What I claim as my invention, and desire to secure by Letters Patent, is—

1. The combination, with a ventilator or heat-controlling device of an incubator, a water-heater, and a system of circulating-pipes for heating the incubator, of a balanced water-chamber in closed and constant communication with the circulating system, and arranged just above the level of water in the system, said water being heated to the desired degree, and into which water from the system will flow on being expanded by excess of heat, and connections through which the ventilator or heat-controlling device will be shifted by the downward movement of such water-chamber on said water rising thereinto, substantially as herein described.

2. The combination, with a ventilator or heat-controlling device of an incubator, a water-heater, and a system of circulating pipes for heating the incubator, of a weighted beam carrying a water-chamber which has a constant communication through a flexible tube with the circulating system, and is arranged just above the level of water in the system, said water being heated to the desired degree, and a connection between said beam and the ventilator or heat-controlling device, whereby said ventilator or heat-controlling device will be shifted on said water rising into the water-chamber by undue expansion produced by excess of heat, substantially as herein described.

3. The combination, with the ventilator or heat-controlling device of an incubator, of a water-heater and a system of circulating-pipes for heating the same, a water-reservoir, e, surmounting the system of pipes, and having the water-space in its upper portion contracted, and a balance supporting a water-chamber connected flexibly with the water-reservoir, and itself connected with the ventilator or heat-controlling device, substantially as herein described.

JAMES W. CAMPBELL.

Witnesses:
LEWIS E. DICK,
CLAUDIUS ROCKEFELLER.

784 (Defendants' Exhibit P, Letters Patent No. 559,676 to T. R. C. Christianson, May 5, 1896.)

(No Model.) 4 Sheets—Sheet 1.

T. R. C. CHRISTIANSON.

STORING EGGS AND APPARATUS FOR TURNING THEM TO KEEP THEM FRESH.

No. 559,676. Patented May 5, 1896.

Fig. 1.

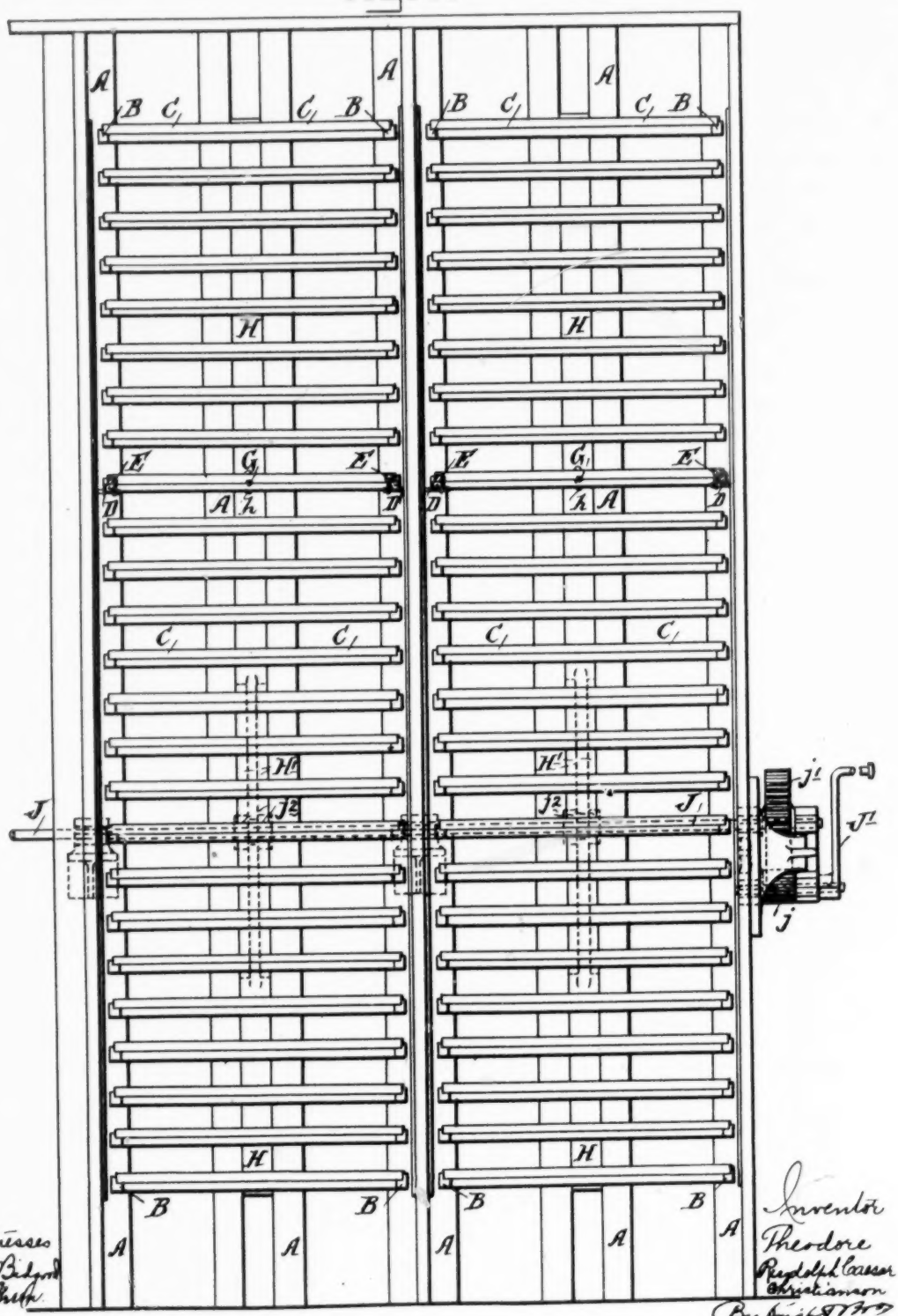

Witnesses
Jno. V. Bidgood
J. Guth

Inventor
Theodore
Rudolph Cæsar
Christianson
By Munn & Co
Attys.

(No Model.) 4 Sheets—Sheet 2.

T. R. C. CHRISTIANSON.

STORING EGGS AND APPARATUS FOR TURNING THEM TO KEEP THEM FRESH.

No. 559,676. Patented May 5, 1896.

Fig. II.

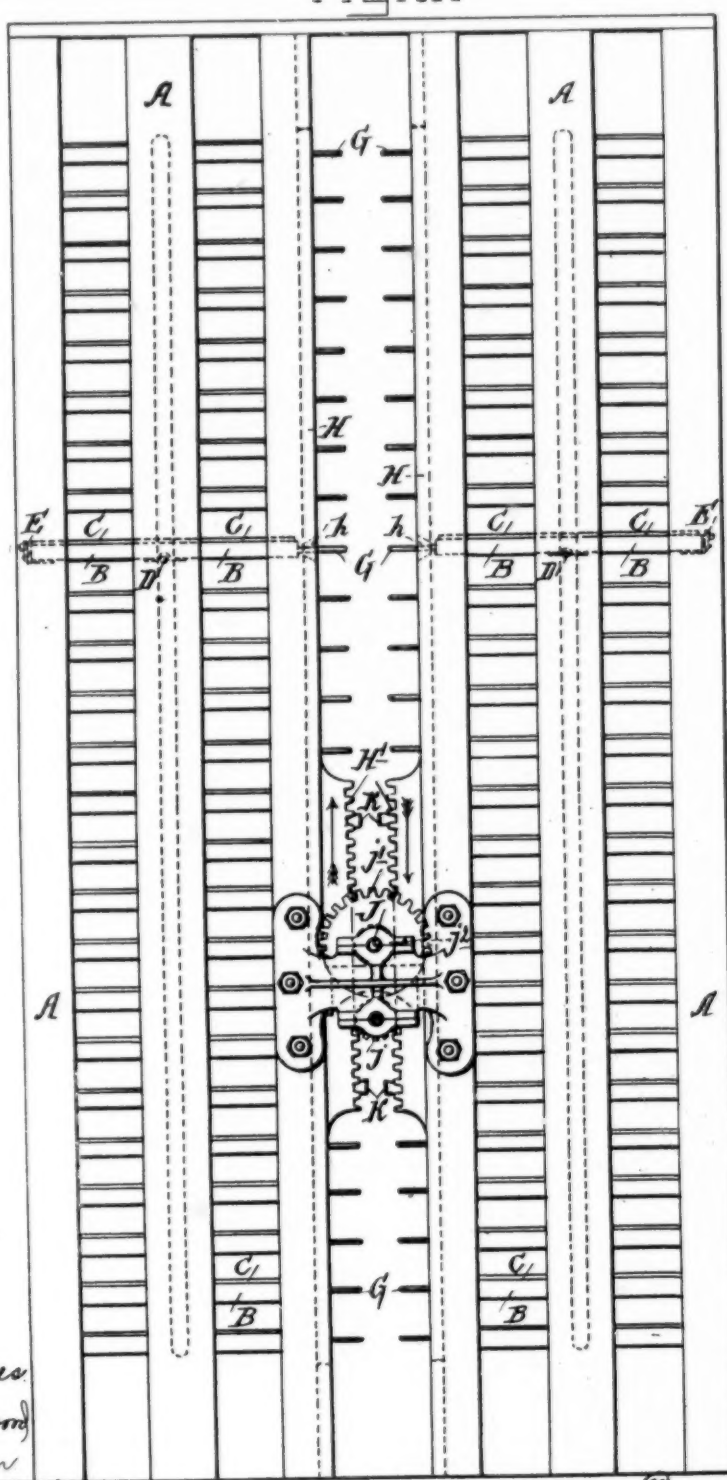

Witnesses
M. V. Bidgood
J. Brown

Inventor
Theodore
Rudolph Caesar
Christianson,
By [illegible]
Attys.

642 (No Model.) 4 Sheets—Sheet 3.

T. R. C. CHRISTIANSON.

STORING EGGS AND APPARATUS FOR TURNING THEM TO KEEP THEM FRESH.

No. 559,676. Patented May 5, 1896.

Fig. III.

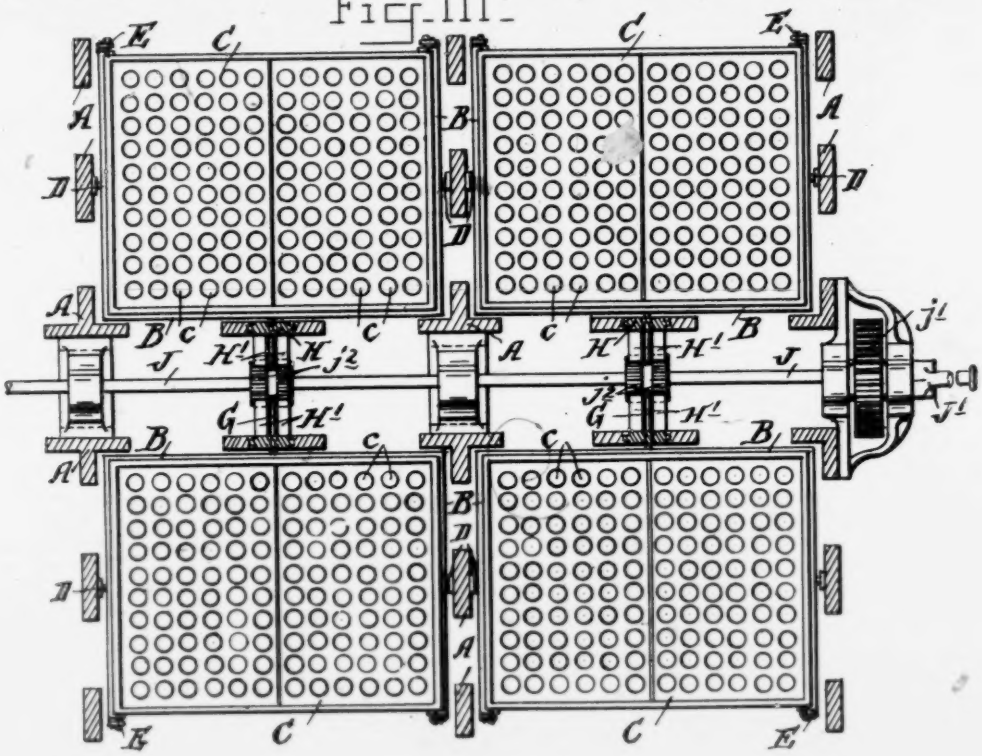

Fig. IV.

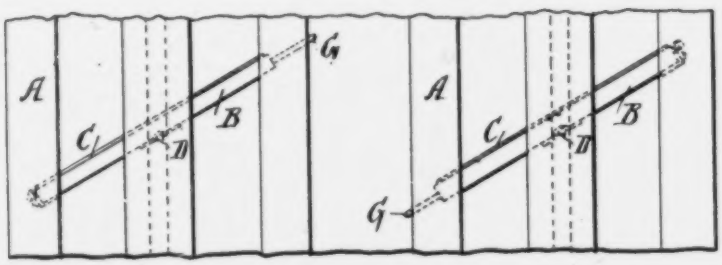

Fig. V.

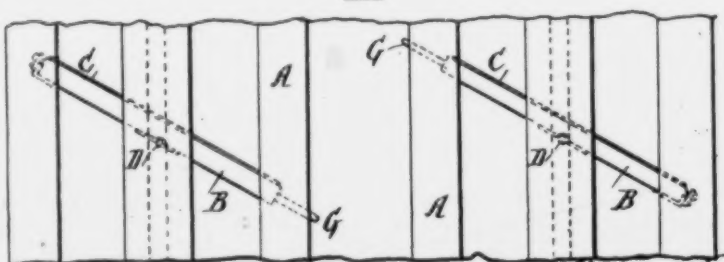

Witnesses:
M. V. Bidgood
J. Green

Inventor
Theodore Rudolph
Caesar Christianson
By [illegible] Attys.

(No Model.) 4 Sheets—Sheet 4.

T. R. C. CHRISTIANSON.

STORING EGGS AND APPARATUS FOR TURNING THEM TO KEEP THEM FRESH.

No. 559,676. Patented May 5, 1896.

Fig. VI.

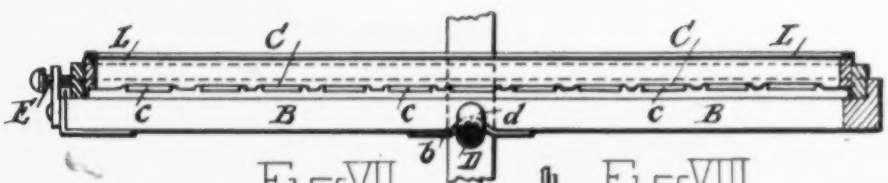

Fig. VII.

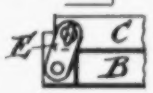

Fig. VIII.

Witnesses
M. V. Bidgood
J. Greer

Inventor:
Theodore Rudolph
Caesar Christianson
By Munn & Co
Attys.

UNITED STATES PATENT OFF

THEODORE RUDOLPH CÆSAR CHRISTIANSON, OF LEITH, S

STORING EGGS AND APPARATUS FOR TURNING THEM TO KEEP THEM FR

SPECIFICATION forming part of Letters Patent No. 559,676, dated May

Application filed April 4, 1895. Serial No. 544,423. (No model.) Patented in England November 2,

To all whom it may concern:

Be it known that I, THEODORE RUDOLPH CÆSAR CHRISTIANSON, a subject of the Queen of Great Britain, residing at Quality Lane, Leith, Scotland, have invented certain new and useful Improvements in Apparatus for Storing and Preserving Eggs, (for which a patent has been granted in England, No. 21,035, dated November 2, 1894;) and I do hereby declare that the following specification, taken in connection with the accompanying drawings, which form a part thereof, is a full, clear, and exact description of my improvements, such as will enable those skilled in the art to make and use the same.

My invention relates to improvements in the class of egg storing and preserving apparatus comprising, essentially, a pivotally-supported tray adapted to receive the eggs, and means for tilting the tray out of a horizontal for changing the position of the eggs and preventing the yolks becoming attached to the shells.

My invention relates particularly to the details of construction, the novel features of which will first be described with reference to the accompanying drawings, and afterward more particularly pointed out in the annexed claims.

In said drawings, Figure I is a front elevation of my improved egg-preserving device. Fig. II is a side elevation of the same. Fig. III is a sectional plan view of same. Figs. IV and V are enlarged detail side elevations representing the two tilted positions of the trays. Fig. VI is an enlarged detail sectional view representing the means for pivotally supporting the frames carrying the egg-trays. Fig. VII is an enlarged detail view of the catch for securing the trays in the pivoted frames. Fig. VIII is an enlarged detail sectional elevation showing one of the pivot-supports.

A is an upright framework, of wood or any other suitable material.

B are a series of small rectangular frames pivotally supported in framework A upon the stationary pins D, and confined upon the pins by the removable head-plates, which are held in place by small bolts *d*. The pins D work in metal bearings *b*, secured to the frames B.

C are the egg-trays, formed, preferably, with individual openings to receive
trays C are adapted to rest u
frames B and be confined or c
by means of the screw-clam
upon frame B, preferably two

G is a pin or rod secured
frames B and passing through
or slots *h*, formed in a longitu
vertical bar H, supported in s
in the upright framework. T
h are expanded or enlarged i
from the inner face, adjacent
toward the other face of the
in order to allow for the free
frames and the bars.

H′ are rack-bars attached
placed to face each other, an
tween them is a cross-shaft J,
*j*², which mesh with the rack
them in opposite directions
frame B when the shaft J is
dle J′ through gearing *j*′.

I prefer to arrange the pivo
two, four, six, or more series,
together to operate in pairs
operating-shaft, and it is the
the apparatus in a cool place
40° Fahrenheit—and the egg
to the air in order to keep the

The eggs are placed in th
trays C with their points do
the proper intervals the gea
to actuate the racks H′. Wh
direction of the arrows, Fig.
carrying the eggs would be ti
sition shown in Fig. IV, and i
reverse direction the trays w
the position shown in Fig. V
the position of the yolk in th
egg to be changed when desi
sure that the yolk is always e
albumen and will not adhere

The trays C and supports
to any desired angle, though
ploy limiting stops or studs
H′, so as to prevent the trays
far. Also, if desired, I may p
C with netting or other cover
as to prevent the eggs from fa
apparatus be jerked; but th
tilting the trays being so unif
slow, it is, under ordinary cir

4 Sheets—Sheet 4.

T. R. C. CHRISTIANSON.

APPARATUS FOR TURNING THEM TO KEEP THEM FRESH.

Patented May 5, 1896.

Fig. VI.

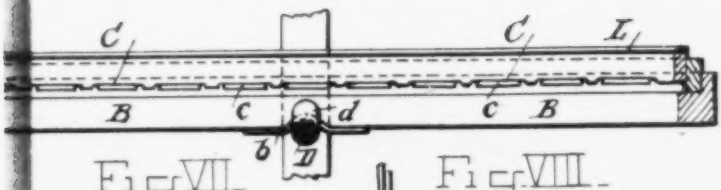

Fig. VII.

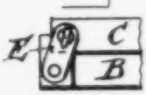

Fig. VIII.

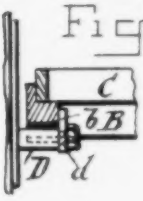

Inventor:—
Theodore Rudolph
Caesar Christianson
By [illegible]
Attys.

UNITED STATES PATENT OFFICE.

THEODORE RUDOLPH CÆSAR CHRISTIANSON, OF LEITH, SCOTLAND.

STORING EGGS AND APPARATUS FOR TURNING THEM TO KEEP THEM FRESH.

SPECIFICATION forming part of Letters Patent No. 559,676, dated May 5, 1896.

Application filed April 4, 1895. Serial No. 544,423. (No model.) Patented in England November 2, 1894, No. 21,035.

To all whom it may concern:

Be it known that I, THEODORE RUDOLPH CÆSAR CHRISTIANSON, a subject of the Queen of Great Britain, residing at Quality Lane, Leith, Scotland, have invented certain new and useful Improvements in Apparatus for Storing and Preserving Eggs, (for which a patent has been granted in England, No. 21,035, dated November 2, 1894;) and I do hereby declare that the following specification, taken in connection with the accompanying drawings, which form a part thereof, is a full, clear, and exact description of my improvements, such as will enable those skilled in the art to make and use the same.

My invention relates to improvements in the class of egg storing and preserving apparatus comprising, essentially, a pivotally-supported tray adapted to receive the eggs, and means for tilting the tray out of a horizontal for changing the position of the eggs and preventing the yolks becoming attached to the shells.

My invention relates particularly to the details of construction, the novel features of which will first be described with reference to the accompanying drawings, and afterward more particularly pointed out in the annexed claims.

In said drawings, Figure I is a front elevation of my improved egg-preserving device. Fig. II is a side elevation of the same. Fig. III is a sectional plan view of same. Figs. IV and V are enlarged detail side elevations representing the two tilted positions of the trays. Fig. VI is an enlarged detail sectional view representing the means for pivotally supporting the frames carrying the egg-trays. Fig. VII is an enlarged detail view of the catch for securing the trays in the pivoted frames. Fig. VIII is an enlarged detail sectional elevation showing one of the pivot-supports.

A is an upright framework, of wood or any other suitable material.

B are a series of small rectangular frames pivotally supported in framework A upon the stationary pins D, and confined upon the pins by the removable head-plates, which are held in place by small bolts *d*. The pins D work in metal bearings *b*, secured to the frames B.

C are the egg-trays, formed, preferably, with individual openings to receive the eggs. The trays C are adapted to rest upon the pivoted frames B and be confined or clamped in place by means of the screw-clamps E, mounted upon frame B, preferably two for each frame.

G is a pin or rod secured to each of the frames B and passing through one of the holes or slots *h*, formed in a longitudinally-movable vertical bar H, supported in suitable bearings in the upright framework. The holes or slots *h* are expanded or enlarged in vertical width from the inner face, adjacent to the frames B, toward the other face of the bar in both bars in order to allow for the free movement of the frames and the bars.

H′ are rack-bars attached to the bars H, placed to face each other, and journaled between them is a cross-shaft J, carrying pinions j^2, which mesh with the rack-bars and move them in opposite directions for tilting the frame B when the shaft J is rotated by handle J′ through gearing *j*′.

I prefer to arrange the pivoted frames B in two, four, six, or more series, as shown, geared together to operate in pairs from a common operating-shaft, and it is the intention to keep the apparatus in a cool place—say from 38° to 40° Fahrenheit—and the eggs freely exposed to the air in order to keep them cool and fresh.

The eggs are placed in the holes *c* of the trays C with their points downward, and at the proper intervals the gearing is operated to actuate the racks H′. When moved in the direction of the arrows, Fig. II, the trays C carrying the eggs would be tilted into the position shown in Fig. IV, and if actuated in the reverse direction the trays would be tilted to the position shown in Fig. V, thus enabling the position of the yolk in the albumen of the egg to be changed when desired, so as to insure that the yolk is always embedded in the albumen and will not adhere to the shell.

The trays C and supports B may be tilted to any desired angle, though I prefer to employ limiting stops or studs K on the racks H′, so as to prevent the trays being tilted too far. Also, if desired, I may provide the trays C with netting or other covers L, Fig. VII, so as to prevent the eggs from falling should the apparatus be jerked; but the movement in tilting the trays being so uniform, gentle, and slow, it is, under ordinary circumstances, im-

646

possible for a sudden jerk to take place, the whole thus forming an apparatus in which eggs may be stored and in which eggs are mechanically turned from time to time, as desired, so as to alter the position of their yolks, and at the same time the air being permitted to pass freely through the apparatus and around the eggs, whereby the eggs are kept fresh for a long time.

Having thus described my invention, the following is what I claim as new therein and desire to secure by Letters Patent:

1. In an apparatus, for storing and preserving eggs, the combination of a suitable support, the frames pivotally mounted in the support, a longitudinally-movable bar formed with holes or slots, pins or rods projecting from the pivoted frames and engaging in said holes or slots, and means for moving said bar longitudinally for tipping the frames on their pivots; the holes or slots in the bar being expanded or increased in vertical width from the inner face adjacent to the pivoted frames toward the outer face of the bar, to allow for the free movement of the pins or rods, substantially as set forth.

2. In an apparatus for storing and preserving eggs, the combination of a suitable supporting-framework, a series of small frames pivotally mounted in said framework, the egg-trays supported upon the pivoted frames, suitable fastening devices for securing the trays in place on the pivoted frames, and suitable means for tilting the pivoted frames, substantially as set forth.

3. In an apparatus for storing and preserving eggs, the combination of a suitable supporting-framework, pairs of inwardly-projecting pins on the framework, the small frame provided with suitable bearings resting upon said pins for pivotally supporting the frames, means for confining the frames on said pivot-pins, the egg-trays supported upon the pivoted frames, and clamping devices carried by the frames adapted to engage the trays and hold them securely in place, substantially as set forth.

4. In an apparatus for storing and preserving eggs, the combination of a suitable supporting-framework, a series of small frames pivoted therein, pins or rods projecting from the pivoted frames, a longitudinally-movable rod formed with holes or slots in which said pins or rods engage, a rack on said bar, a pinion engaging said rack, and means for operating said pinion, substantially as set forth.

5. In an apparatus for storing and preserving eggs, the combination of a suitable supporting-framework, a series of small frames pivotally mounted in said framework and having pins or rods projecting from them, a longitudinally-movable bar having holes or slots in which said pins or rods engage, a rack H′ carried by said bar, stops K formed on said rack, and a pinion meshing with said rack for operating the bar longitudinally, substantially as set forth.

6. In an apparatus for storing and preserving eggs, the combination of a suitable supporting-framework, two vertical series of small frames individually pivoted in parallel planes in said framework, pins or rods G projecting inwardly from the pivoted frames, the vertical parallel bars H formed with holes or slots *h* in which said pins or rods engage, racks H′ carried by bars H, the pinions j^2 meshing with said racks, and a handle J′ geared to the pinions for operating them.

THEODORE RUDOLPH CÆSAR CHRISTIANSON.

Witnesses:

CHARLES ALEXANDER CHRISTIANSON,
JANET GIBSON.

794 (Defendants' Exhibit P, Letters Patent No
F. H. Morgan, October 19, 1897.)

n jerk to take place, the
an apparatus in which
and in which eggs are
d from time to time, as
ter the position of their
ne time the air being per-
y through the apparatus
s, whereby the eggs are
g time.
cribed my invention, the
claim as new therein and
Letters Patent:
s, for storing and preserv-
nation of a suitable sup-
ivotally mounted in the
nally-movable bar formed
pins or rods projecting
mes and engaging in said
eans for moving said bar
pping the frames on their
slots in the bar being ex-
d in vertical width from
ent to the pivoted frames
ce of the bar, to allow for
of the pins or rods, sub-
th.
s for storing and preserv-
nation of a suitable sup-
a series of small frames
in said framework, the
upon the pivoted frames,
devices for securing the
the pivoted frames, and
lting the pivoted frames,
forth.
s for storing and preserv-
nation of a suitable sup-
pairs of inwardly-pro-
framework, the small
suitable bearings rest-
for pivotally supporting
the frames, means for confining the frames on said pivot-pins, the egg-trays supported upon the pivoted frames, and clamping devices carried by the frames adapted to engage the trays and hold them securely in place, substantially as set forth.

4. In an apparatus for storing and preserving eggs, the combination of a suitable supporting-framework, a series of small frames pivoted therein, pins or rods projecting from the pivoted frames, a longitudinally-movable rod formed with holes or slots in which said pins or rods engage, a rack on said bar, a pinion engaging said rack, and means for operating said pinion, substantially as set forth.

5. In an apparatus for storing and preserving eggs, the combination of a suitable supporting-framework, a series of small frames pivotally mounted in said framework and having pins or rods projecting from them, a longitudinally-movable bar having holes or slots in which said pins or rods engage, a rack H′ carried by said bar, stops K formed on said rack, and a pinion meshing with said rack for operating the bar longitudinally, substantially as set forth.

6. In an apparatus for storing and preserving eggs, the combination of a suitable supporting-framework, two vertical series of small frames individually pivoted in parallel planes in said framework, pins or rods G projecting inwardly from the pivoted frames, the vertical parallel bars H formed with holes or slots *h* in which said pins or rods engage, racks H′ carried by bars H, the pinions j^2 meshing with said racks, and a handle J′ geared to the pinions for operating them.

THEODORE RUDOLPH CÆSAR CHRISTIANSON.

Witnesses:

CHARLES ALEXANDER CHRISTIANSON,

JANET GIBSON.

794 (Defendants' Exhibit P, Letters Patent No. 591,870 to F. H. Morgan, October 19, 1897.)

F. H. MORGAN.

INCUBATOR.

No. 591,870. Patented Oct. 19, 1897.

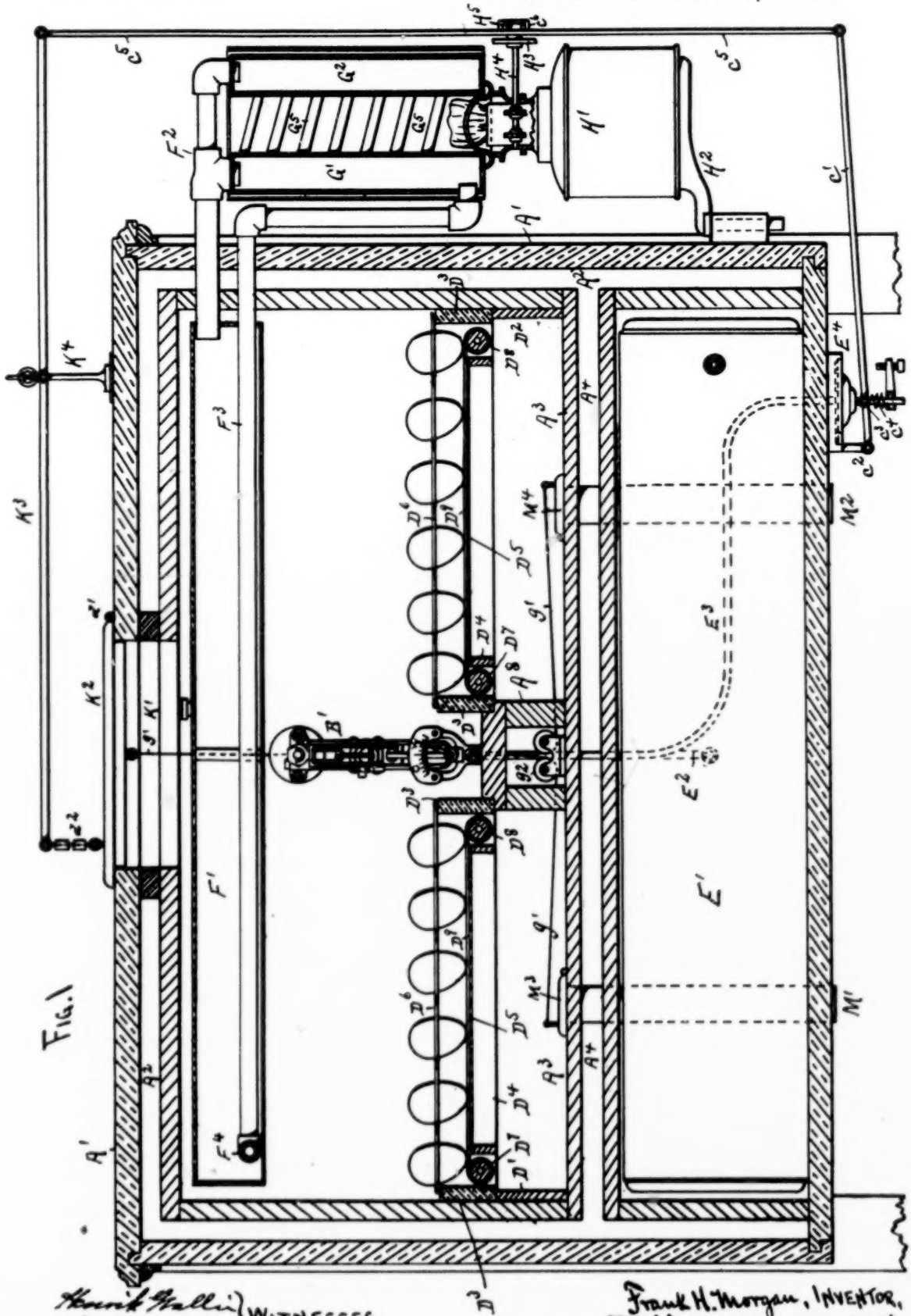

FIG. 1

Henrik Wallin } WITNESSES.
A. Lindahl.

Frank H. Morgan, INVENTOR,
By Charles N. Woodward Attys.

650

(No Model.) 3 Sheets—Sheet 2.

F. H. MORGAN.

INCUBATOR.

No. 591,870. Patented Oct. 19, 1897.

Fig. 4

Fig. 3

Fig. 5

Fig. 2

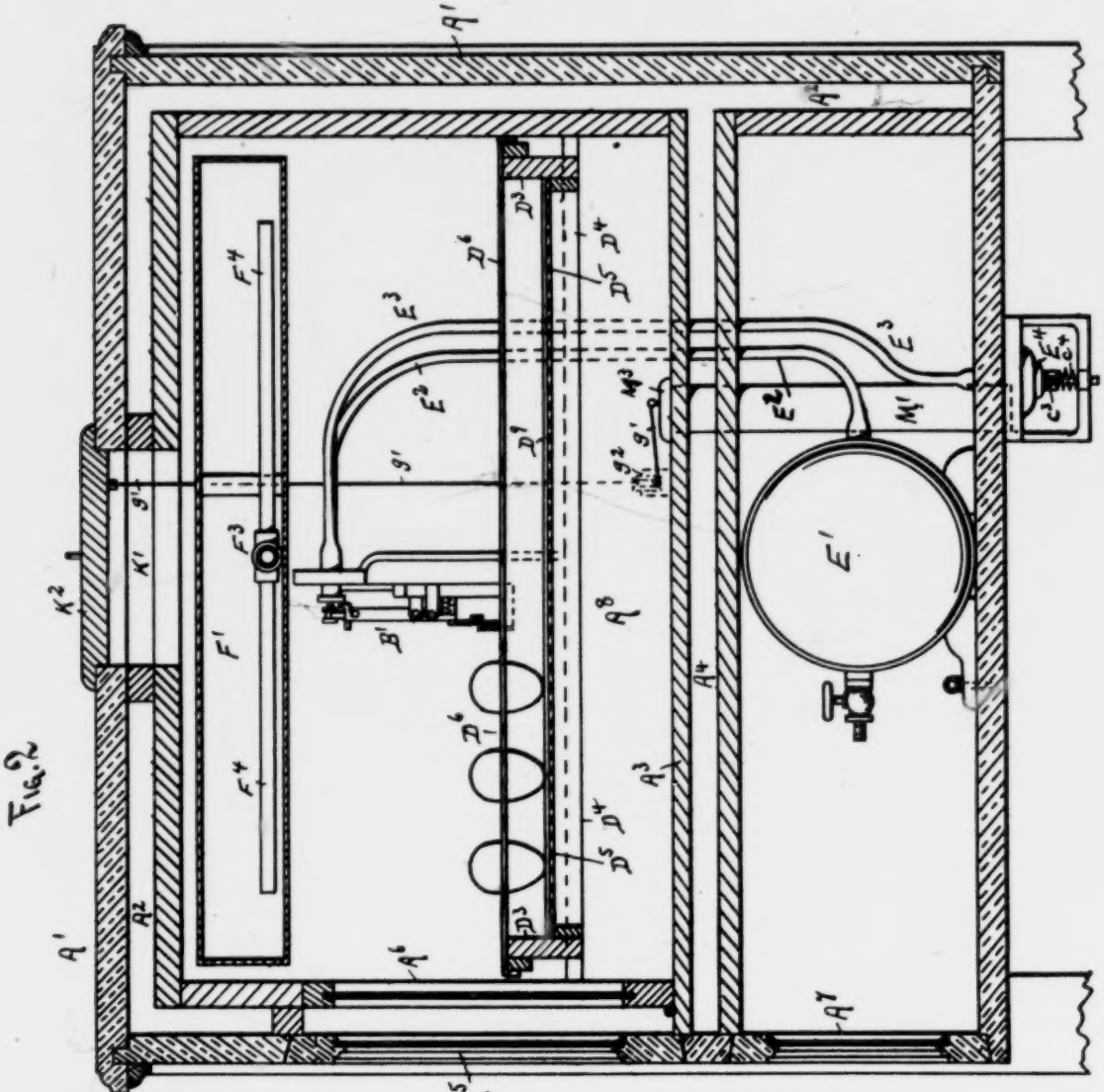

Witnesses:
Henrik Wallin
A. Lindahl

Frank H. Morgan, Inventor,
By Charles N. Woodward, Atty.

(No Model.) 3 Sheets—Sheet 3.

F. H. MORGAN.

INCUBATOR.

No. 591,870. Patented Oct. 19, 1897.

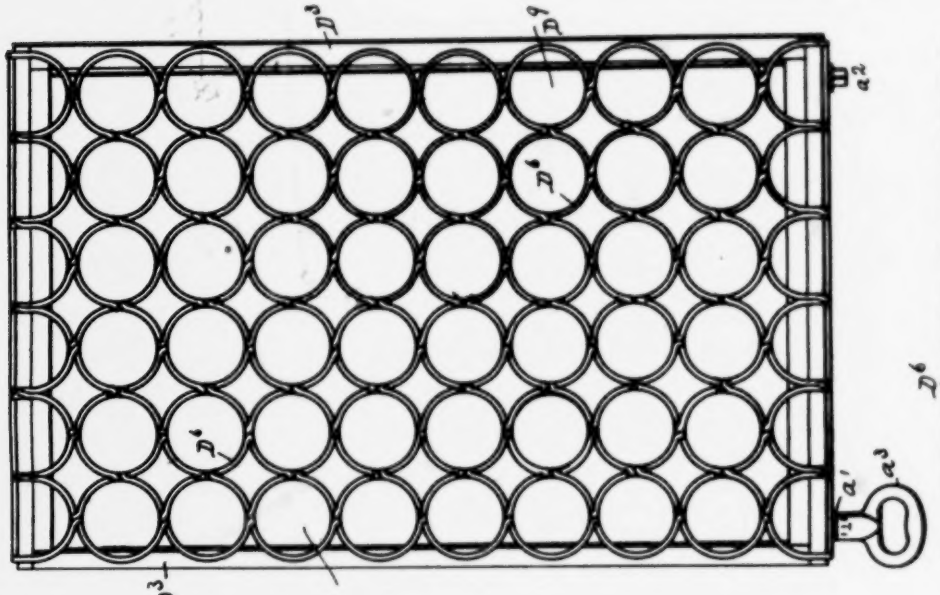

FIG. 7

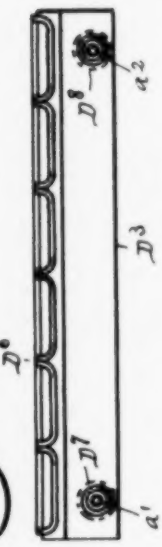

FIG. 8

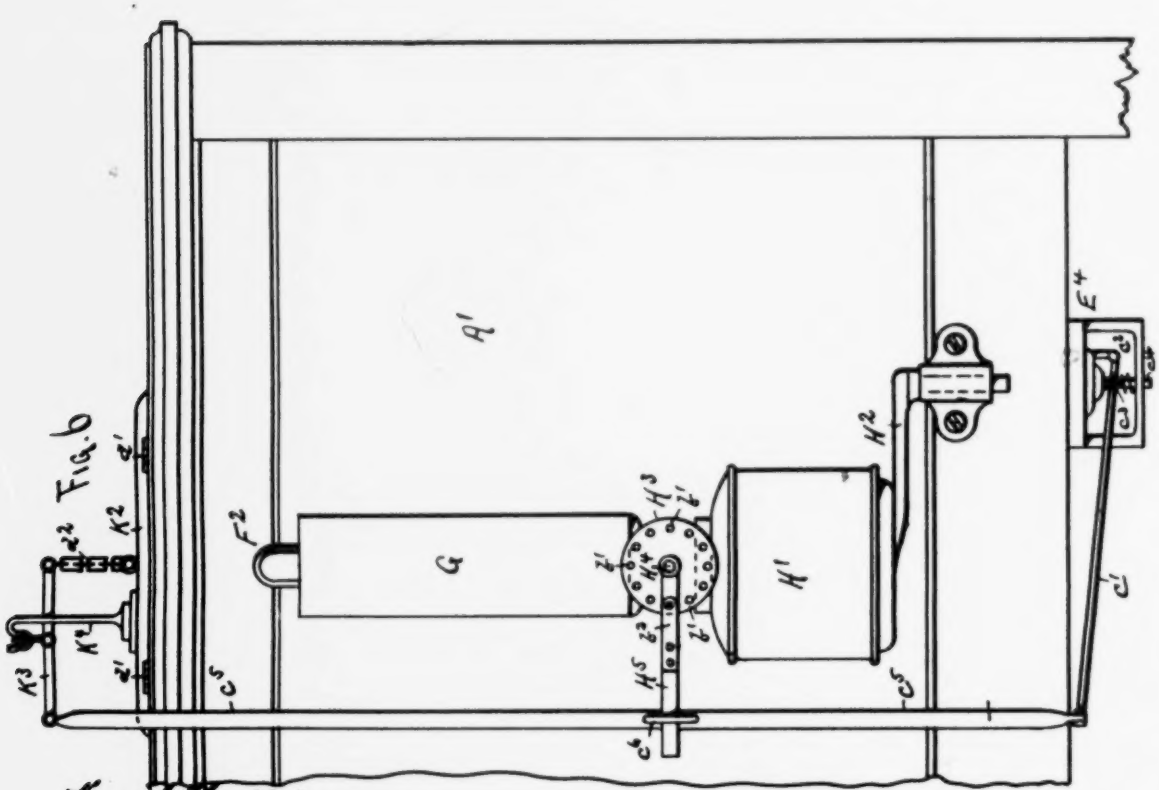

FIG. 6

Witnesses: Frank Wallis, A. Lindahl.

Frank H. Morgan, Inventor. By Charles H. Woodward, Atty.

UNITED STATES PATENT

FRANK H. MORGAN, OF ST. PAUL, MIN

INCUBATOR.

SPECIFICATION forming part of Letters Patent No. 591,870, d

Application filed January 20, 1896. Serial No. 576,111. (N

To all whom it may concern:

Be it known that I, FRANK H. MORGAN, a citizen of the United States, residing at St. Paul, in the county of Ramsey and State of Minnesota, have invented certain new and useful Improvements in Incubators, of which the following is a specification.

This invention relates to incubators; and it consists in the construction, combination, and arrangement of parts, as hereinafter shown and described, and specifically pointed out in the claims.

In the drawings, Figure 1 is a longitudinal sectional elevation, and Fig. 2 is a cross-sectional elevation. Fig. 3 is a longitudinal section, Fig. 4 is a cross-section, and Fig. 5 is a horizontal section, of the circulating-heater detached. Fig. 6 is an end elevation of a portion of the incubator from the outside. Fig. 7 is a plan view, and Fig. 8 is an end view, of one of the egg-supporting trays removed.

A′ is the outer casing, which is preferably made with double outside walls to form a dead-air space A^2 around the outside wall and top, and with a cross-partition A^3, also with a dead-air space A^4, a short distance up from the bottom, as shown. The front of the casing is provided with double glass doors A^5 A^6, while the front of the chamber below the cross-partition A^3 is likewise provided with a door A^7, as shown in Fig. 2. Rising from the center of the cross-partition A^3 is a hollow frame A^8, extending from front to rear, and adapted to support a thermostat B′, of any approved form. Resting by their outer edges upon ways D′ D^2 and by their inner edges upon the cross-frame A^8 are the egg-support-

the frame in one
opposite direction
revolved in the op
will be set in pla
the grating D^6 wi
upon the cloth D^8
port. Then when
direction by revo
or D^5, the eggs wi
rection, as shown
other roller be re
drawn in the oppo
lower ends of the
them in the opp
easily and quickl
sary turning of t

Within the spa
tion A^3 is a compr
nected by a tube
thermostat B′, as
other tube E^3 lead
thermostat to a di
beneath the casin

Supported in th
of the casing A′ is
and outside the c
end, is a circulati
shells G′ G^2, conne
G^5 and connected
part of the hot-w
while the lower en
wise connected to
by piping F^3, the la
along its lower p
head pipe F^4, so th
ing the piping F
length of the tank
plied to the shells

3 Sheets—Sheet 3.

F. H. MORGAN.

INCUBATOR.

Patented Oct. 19, 1897.

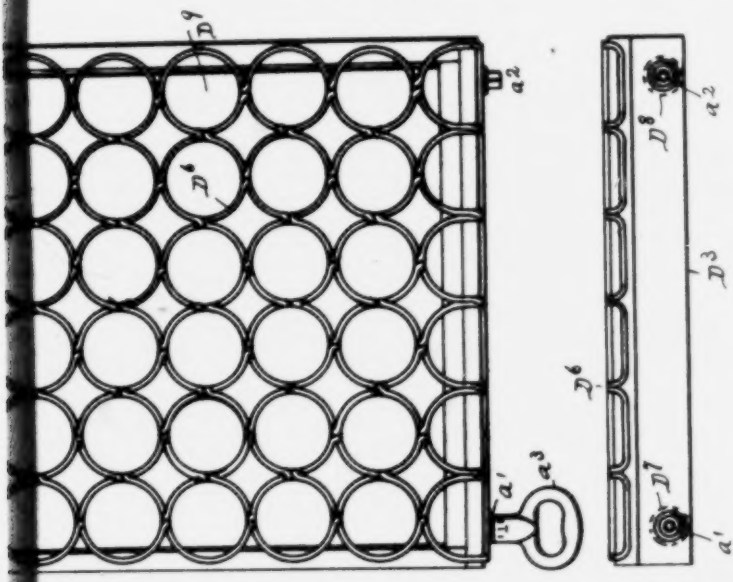

FIG. 8

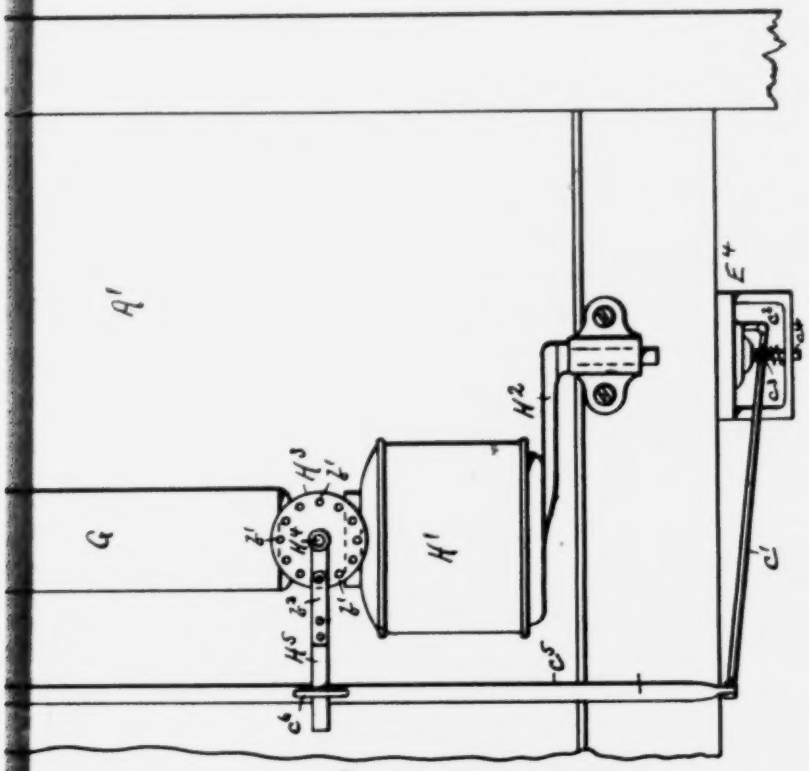

NESSES.

Frank H. Morgan, INVENTOR.
By Charles H. Woodward, Atty.

UNITED STATES PATENT OFFICE.

FRANK H. MORGAN, OF ST. PAUL, MINNESOTA.

INCUBATOR.

SPECIFICATION forming part of Letters Patent No. 591,870, dated October 19, 1897.

Application filed January 20, 1896. Serial No. 576,111. (No model.)

To all whom it may concern:

Be it known that I, FRANK H. MORGAN, a citizen of the United States, residing at St. Paul, in the county of Ramsey and State of Minnesota, have invented certain new and useful Improvements in Incubators, of which the following is a specification.

This invention relates to incubators; and it consists in the construction, combination, and arrangement of parts, as hereinafter shown and described, and specifically pointed out in the claims.

In the drawings, Figure 1 is a longitudinal sectional elevation, and Fig. 2 is a cross-sectional elevation. Fig. 3 is a longitudinal section, Fig. 4 is a cross-section, and Fig. 5 is a horizontal section, of the circulating-heater detached. Fig. 6 is an end elevation of a portion of the incubator from the outside. Fig. 7 is a plan view, and Fig. 8 is an end view, of one of the egg-supporting trays removed.

A′ is the outer casing, which is preferably made with double outside walls to form a dead-air space A^3 around the outside wall and top, and with a cross-partition A^3, also with a dead-air space A^4, a short distance up from the bottom, as shown. The front of the casing is provided with double glass doors A^5 A^6, while the front of the chamber below the cross-partition A^3 is likewise provided with a door A^7, as shown in Fig. 2. Rising from the center of the cross-partition A^3 is a hollow frame A^8, extending from front to rear, and adapted to support a thermostat B′, of any approved form. Resting by their outer edges upon ways D′ D^2 and by their inner edges upon the cross-frame A^8 are the egg-supporting trays, which are made with a wire-cloth support D^9 and a grating D^6, and are provided with cross-bars D^4 and D^5, the latter of which is provided with a handle D^3. Resting upon the cross-bars D^4 D^5 are the rollers D^7 D^8, which are provided with pins D^{10} D^{11}, which enter holes in the ends of the cross-bars D^4 D^5, as shown in Fig. 8. The cloth D^9 is drawn in the direction of the frame in one direction, and drawn in the opposite direction when the other roller D^8 is revolved in the opposite direction. The eggs will be set in place through the meshes of the grating D^6 with their small ends resting upon the cloth D^9 above the wire-cloth support. Then when the cloth D^9 is drawn in one direction by revolving one of the rollers D^7 or D^8, the eggs will all be inclined in one direction, as shown in Fig. 1. Then if the other roller be revolved, the cloth D^9 will be drawn in the opposite direction, carrying the lower ends of the eggs with it, and inclining them in the opposite direction, thus very easily and quickly accomplishing the necessary turning of the eggs at stated intervals.

Within the space beneath the cross-partition A^3 is a compressed-air reservoir E′, connected by a tube E^2 to the inlet side of the thermostat B′, as shown in Fig. 2, while another tube E^3 leads from the outlet side of the thermostat to a diaphragm-governor valve E^4 beneath the casing A′, as shown.

Supported in the interior of the upper part of the casing A′ is a closed hot-water tank F′, and outside the casing A′, preferably at one end, is a circulating-heater consisting of two shells G′ G^2, connected by inclined cross-tubes G^5 and connected at their tops to the upper part of the hot-water tank F′ by piping F^2, while the lower end of one of the shells is likewise connected to the lower part of the tank by piping F^3, the latter extended into the tank along its lower part and ending in a cross-head pipe F^4, so that the water before entering the piping F^3 must traverse the whole length of the tank. By this means heat applied to the shells G′ G^2 will cause the water

Through the top of the casing A′ an opening K′ is formed and covered by a door or lid K^2, hinged at one side at d' and connected by a chain d^2, or other means, to one end of a lever K^3, the latter supported pivotally by a standard K^4 from the top of the casing A′, as shown.

c' is a lever pivoted by one end to a hanger c^2 from the diaphragm-valve E^4, and pivoted at c^3 to the stem c^4 of the valve, and projecting outward beyond the casing A′, and connected at its longer end by a rod c^5 to the outer end of the lever K^3, as shown. The lever H^5 projects past the rod c^5, and is loosely connected thereto by a strap or loop c^6, so that any rising or falling movement of the rod c^5 will carry the lever H^5 with it.

Fitting down through the cross-partition A^3, and also through the bottom of the casing A′, are tubes M′ M^2, open at their ends to form connections between the interior of the casing A′ and the open air. The upper ends of these tubes M′ M^2 are covered by hinged valves M^3 M^4, the latter connected by cords g', running over pulleys g^2 to the lid K^2, as shown, so that when the lid is lifted the valves M^3 M^4 will likewise be opened.

The thermostat B′ being set to operate at any predetermined temperature, when that point is reached, the valves of the thermostat will permit a supply of compressed air to pass from the tube E^2, leading from the receiver E′, to the tube E^3, leading to the valve E^4, which by expanding will depress the lever c', which will, through the rod c^5 and lever K^3, raise the lid K^2 and permit the hot air to escape. This will continue until the temperature has fallen to a sufficient extent to cause the thermostat to again close its valves and shut off the supply of compressed air, and thus permit the valve E^4 to collapse and release the levers c' K^3 and rod c^5, and permit the lid K^2 to fall shut.

The upward motion of the rod c^5 will carry the lever H^5 with it and correspondingly lower the lamp-flame and reduce the heat. Then when the return movement of the rod c^5 takes place, the lamp-flame will be again raised to its former position. At the same time that the lid is raised, as before stated, the valves M^3 M^4 will be opened, thus admitting a supply of fresh cool air to replace the hot air escaping from the opening K′.

The opening K′ being placed above the hot-water tank F′, and the latter projecting on all sides nearly to the interior of the casing A′, the escaping air must pass over the heated tank, and the outside air must likewise pass over the heated tank, so that no danger exists of an undue amount of cold air entering the chamber occupied by the egg-trays. By this simple means the temperature is perfectly controlled automatically, the variation of $\frac{1}{4}$° Fahrenheit being sufficient to cause the thermostat to operate, so that the temperature will never vary more than $\frac{1}{4}$° Fahrenheit.

As the wick of the lamp burns off, the circle of perforations in the disk H^3 enables the attendant to perfectly adjust the lever H^5 by setting the pawl b^3 into a new perforation.

The sizes of the tubing connecting the tank F′ and heater G′ G^2 will be graduated to correspond to the requirements of the circulation.

Having thus described my invention, what I claim as new is—

1. In an incubator, the combination of an inclosing casing, an outwardly-opening valve through the top of said casing, egg-holding trays supported within said casing, a closed water-tank supported in the interior of said casing near the top and beneath said valve so that the escaping air must pass over and around said tank, a heater outside said casing and connected into said tank, a lamp supported beneath said heater, a reservoir of compressed air, a flexible diaphragm connected by tubing with said compressed-air reservoir, a thermostat connected into said tubing and adapted to admit compressed air to the rear of said diaphragm, and a system of levers connecting said valve and the mechanism for adjusting the wick of said lamp, to the front of said diaphragm, whereby the rising and falling of the temperature within said casing will cause said valve to be opened or closed and the flame of said lamp correspondingly raised or lowered, and the temperature within the casing thereby automatically regulated, substantially as and for the purpose set forth.

2. In an incubator, the combination of an inclosing casing, an outwardly-opening valve through the top of said casing, an inwardly-opening valve through the bottom of said casing and connected to be actuated simultaneously with said upper valve, egg-holding trays supported within said casing, a closed water-tank supported in the interior of said casing near the top and beneath said upper valve, a heater connected into said tank, a lamp supported beneath said heater, a reservoir of compressed air, a flexible diaphragm connected by tubing with said compressed-air reservoir, a thermostat connected into said tubing and adapted to admit compressed air to the rear of said diaphragm, and a system of levers connecting said valves and the mechanism for adjusting the wick of said lamp, to the front of said diaphragm, whereby the rising and falling of the temperature within said casing will cause said connected valves to be opened or closed and the flame of the lamp correspondingly increased or decreased and the heated air allowed to escape from the upper part of the casing and the cooler air to enter through the bottom of the casing, substantially as and for the purpose set forth.

In testimony whereof I hereunto set my hand in the presence of two subscribing witnesses.

FRANK H. MORGAN.

Witnesses:
C. N. WOODWARD,
H. S. WEBSTER.

802 (Defendants' Exhibit P, Letters Patent No.
V. S. Bell, January 28, 1902.)

the casing A′ an open-
covered by a door or lid
e at d' and connected
means, to one end of a
pported pivotally by a
top of the casing A′, as

by one end to a hanger
n-valve E^4, and pivoted
the valve, and project-
he casing A′, and con-
d by a rod c^5 to the outer
s shown. The lever H^5
c^5, and is loosely con-
rap or loop c^6, so that
novement of the rod c^5
^{5} with it.
h the cross-partition A^3,
ottom of the casing A′,
n at their ends to form
the interior of the cas-
ir. The upper ends of
re covered by hinged
er connected by cords
eys g^2 to the lid K^3, as
e lid is lifted the valves
opened.
being set to operate at
mperature, when that
alves of the thermostat
compressed air to pass
ding from the receiver
ding to the valve E^4,
ill depress the lever c',
e rod c^5 and lever K^3,
ermit the hot air to es-
nue until the tempera-
fficient extent to cause
in close its valves and
of compressed air, and
E^4 to collapse and re-
and rod c^5, and permit

of the rod c^5 will carry
l correspondingly lower
educe the heat. Then
ment of the rod c^5 takes
will be again raised to
At the same time that
efore stated, the valves
thus admitting a sup-
o replace the hot air es-
ing K′.
ng placed above the hot-
e latter projecting on all
terior of the casing A′,
pass over the heated
air must likewise pass
so that no danger exists
of cold air entering the
the egg-trays. By this
mperature is perfectly
ally, the variation of $\frac{1}{2}$°
fficient to cause the ther-
o that the temperature
than $\frac{1}{2}$° Fahrenheit.
lamp burns off, the cir-
cle of perforations in the disk H^3 enables the attendant to perfectly adjust the lever H^5 by setting the pawl b^3 into a new perforation.

The sizes of the tubing connecting the tank F′ and heater G′ G^2 will be graduated to correspond to the requirements of the circulation.

Having thus described my invention, what I claim as new is—

1. In an incubator, the combination of an inclosing casing, an outwardly-opening valve through the top of said casing, egg-holding trays supported within said casing, a closed water-tank supported in the interior of said casing near the top and beneath said valve so that the escaping air must pass over and around said tank, a heater outside said casing and connected into said tank, a lamp supported beneath said heater, a reservoir of compressed air, a flexible diaphragm connected by tubing with said compressed-air reservoir, a thermostat connected into said tubing and adapted to admit compressed air to the rear of said diaphragm, and a system of levers connecting said valve and the mechanism for adjusting the wick of said lamp, to the front of said diaphragm, whereby the rising and falling of the temperature within said casing will cause said valve to be opened or closed and the flame of said lamp correspondingly raised or lowered, and the temperature within the casing thereby automatically regulated, substantially as and for the purpose set forth.

2. In an incubator, the combination of an inclosing casing, an outwardly-opening valve through the top of said casing, an inwardly-opening valve through the bottom of said casing and connected to be actuated simultaneously with said upper valve, egg-holding trays supported within said casing, a closed water-tank supported in the interior of said casing near the top and beneath said upper valve, a heater connected into said tank, a lamp supported beneath said heater, a reservoir of compressed air, a flexible diaphragm connected by tubing with said compressed-air reservoir, a thermostat connected into said tubing and adapted to admit compressed air to the rear of said diaphragm, and a system of levers connecting said valves and the mechanism for adjusting the wick of said lamp, to the front of said diaphragm, whereby the rising and falling of the temperature within said casing will cause said connected valves to be opened or closed and the flame of the lamp correspondingly increased or decreased and the heated air allowed to escape from the upper part of the casing and the cooler air to enter through the bottom of the casing, substantially as and for the purpose set forth.

In testimony whereof I hereunto set my hand in the presence of two subscribing witnesses.

FRANK H. MORGAN.

Witnesses:
C. N. WOODWARD,
H. S. WEBSTER.

802 (Defendants' Exhibit P, Letters Patent No. 691,837 to V. S. Bell, January 28, 1902.)

656 No. 691,837. Patented Jan. 28, 1902.

V. S. BELL.

INCUBATOR.

(Application filed Mar. 28, 1901.)

(No Model.) 2 Sheets—Sheet 2.

Fig. 3.

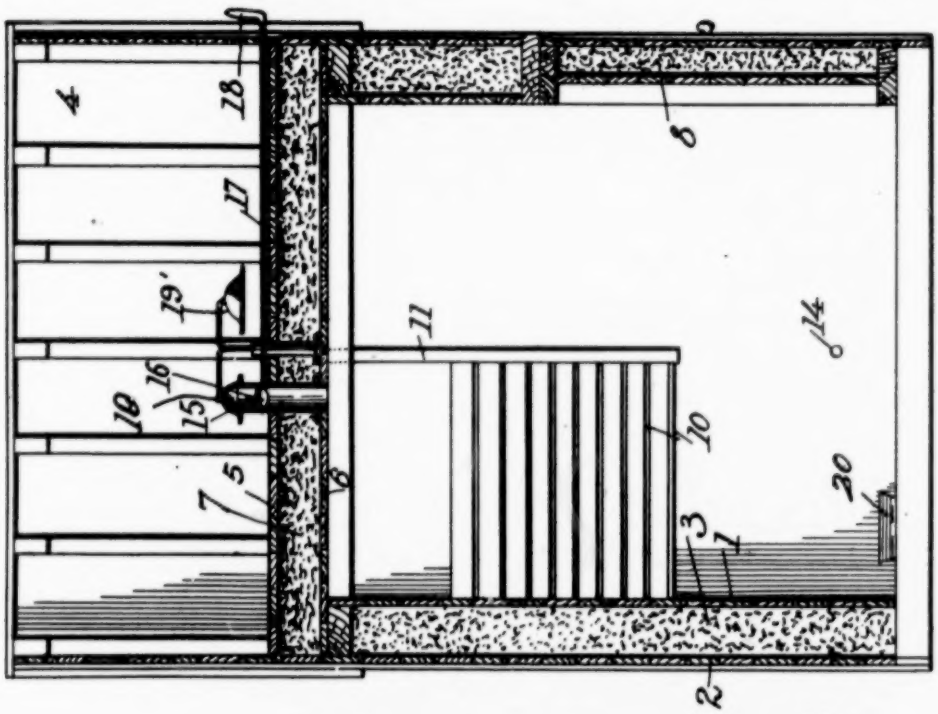

Fig. 2.

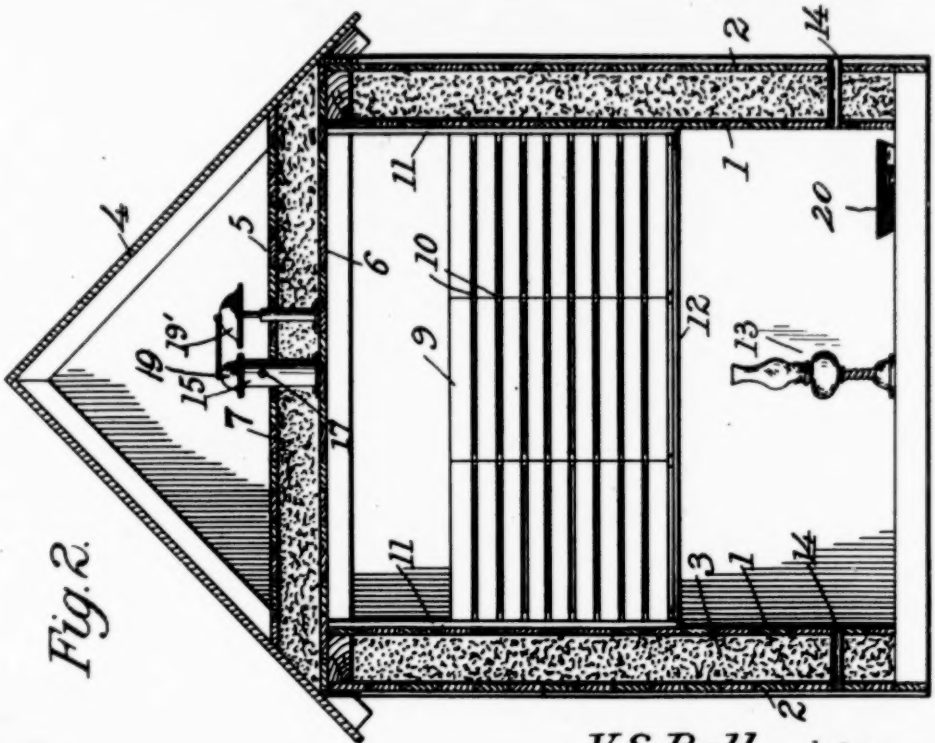

Witnesses:
J. B. Bowen.
H. G. Shepard.

V. S. Bell Inventor
by C. A. Snow & Co.
Attorneys

658

No. 691,837. Patented Jan. 28, 1902.

V. S. BELL.

INCUBATOR.

(Application filed Mar. 28, 1901.)

(No Model.) 2 Sheets—Sheet 1.

Fig. 1.

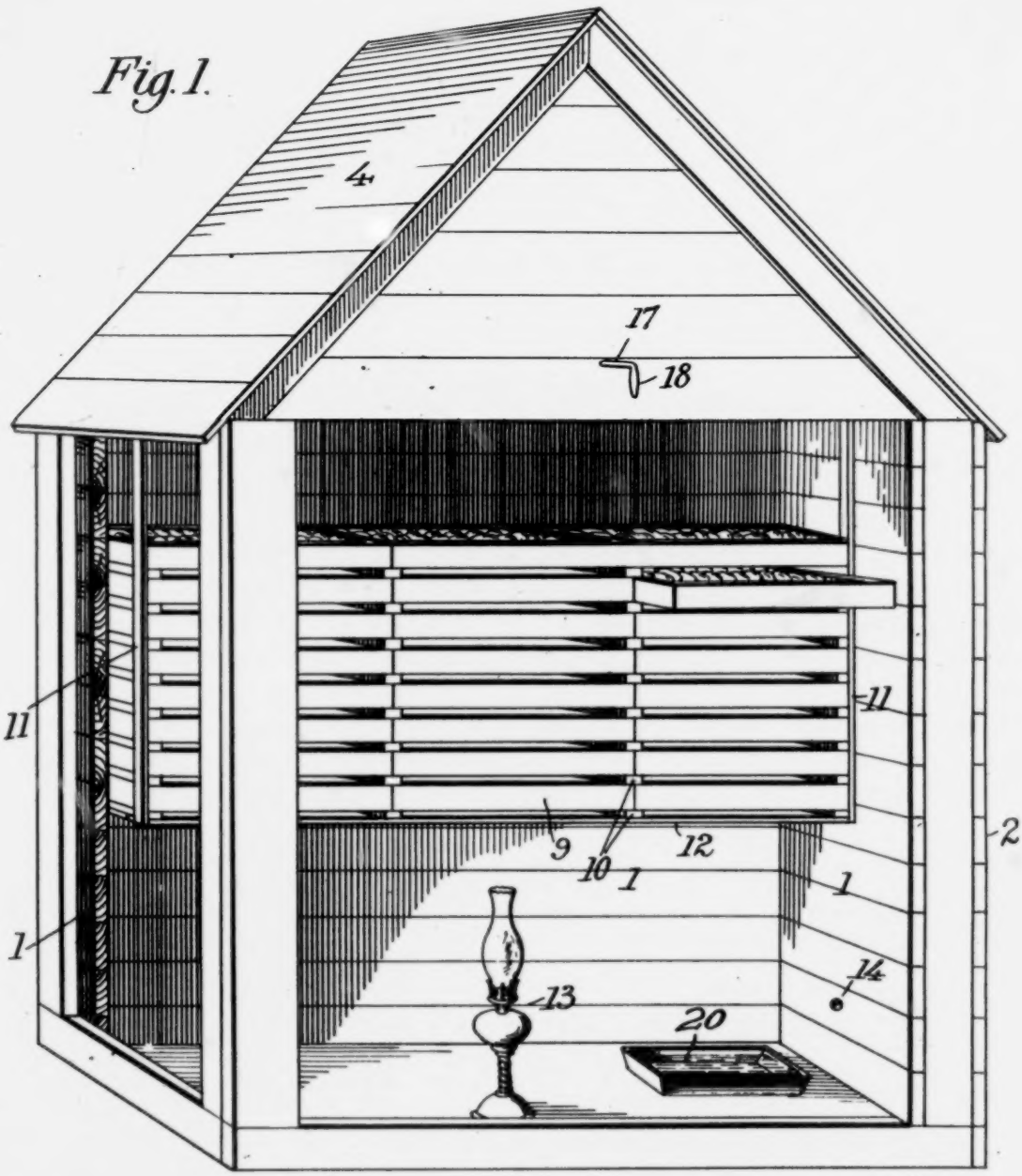

Witnesses:
J. S. Bowen.
H. F. Shepard.

V. S. Bell Inventor
by C. A. Snow & Co.
Attorneys

UNITED STATES PATENT

VIRGIL S. BELL, OF HAYESVILLE, IOW

INCUBATOR.

SPECIFICATION forming part of Letters Patent No. 691,837, date

Application filed March 28, 1901. Serial No. 53,314. (No mode

To all whom it may concern:

Be it known that I, VIRGIL S. BELL, a citizen of the United States, residing at Hayesville, in the county of Keokuk and State of Iowa, have invented a new and useful Incubator, of which the following is a specification.

This invention relates to incubators, and has for its object to provide an improved device of this character which is of great capacity, so that an attendant may have access to the interior thereof for examining the eggs and for any other purpose without exposing the eggs to the outside temperature. It is furthermore designed to provide for effectively ventilating the interior of the device, so as to preserve a proper temperature for the unhatched eggs and also for the recently-hatched chickens, and at the same time prevent the incubator from being chilled too rapidly.

With these and other objects in view the present invention consists in the combination and arrangement of parts, as will be hereinafter more fully described, shown in the accompanying drawings, and particularly pointed out in the appended claim, it being understood that changes in the form, proportion, size, and minor details may be made within the scope of the claim without departing from the spirit or sacrificing any of the advantages of the invention.

In the drawings, Figure 1 is a perspective view of the improved incubator, the front and one side being removed to show the interior thereof. Fig. 2 is a transverse sectional view thereof. Fig. 3 is a sectional view taken at right angles to Fig. 2.

Like characters of reference designate corresponding parts in all of the figures of the drawings.

In carrying out the invention there is built a house or shed having inner and outer walls 1 and 2, that are separated a suitable distance, preferably six inches, and this intervening space is filled with loose earth 3 to form a heat-non-conducting filling, which will maintain the interior air moist. The building is also provided with a peaked roof 4, the ceiling having top and bottom walls 5 and 6, between which is held the filling of earth 7, so that the interior of the building may be entirely housed by ea
is had to the interio
suitable dirt-filled d
the drawings,) wher
enter the building to
out exposing the egg
considerable time.

It is designed to s
9, arranged in groups
being disposed one a
the ascending heat m
For the support of th
a plurality of cleats
ranged in vertical s
wardly from one sid
they are connected i
It will be understood
are arranged at reg
slidably support the
mediate cleats are w
the adjacent edges
the outer ends of the
braced by a hanger 1
ing of the building, a
are connected by a cr
a strong and conveni
port of the egg-trays.
there is a space betw
the thickness of a cl
or spaces will permit
hatched to escape fro
the floor of the shed;
support the trays per
ily drawn outwardly
move or replace them

The interior of th
heated by means of a
the floor of the shed,
plied through pipes
formed through the fi
to the bottom of the b
coming air may becor
fore rising into contac
are supported at a suit
inlet-openings.

For ventilating the
a hot-air-escape pipe
ing through the ceilin
ing a communication
thereof and the air-s
The peaked roof and t
the front and rear wa

Patented Jan. 28, 1902.

V. S. BELL.

INCUBATOR.

(Application filed Mar. 28, 1901.)

2 Sheets—Sheet 1.

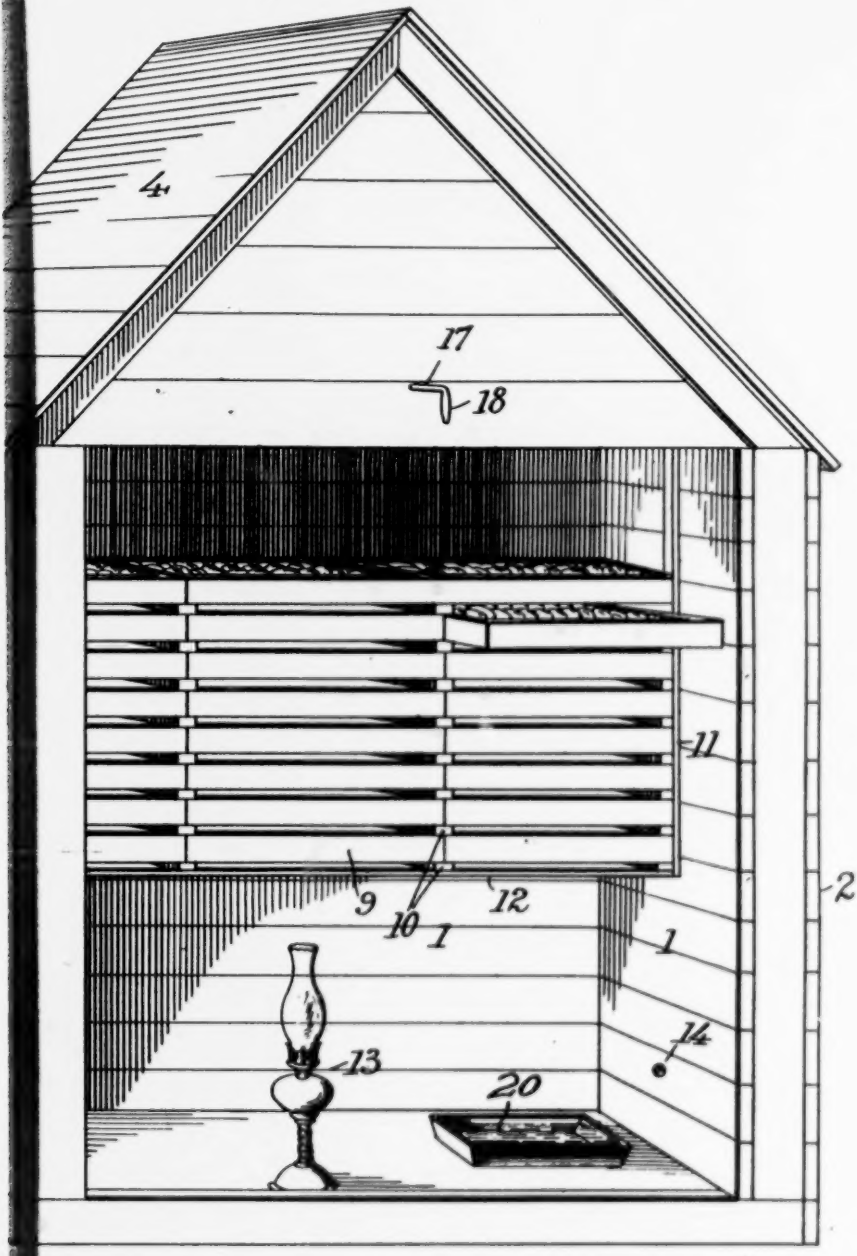

V. S. Bell Inventor

by C. A. Snow & Co.

Attorneys

VIRGIL S. BELL, OF HAYESVILLE, IOWA.

INCUBATOR.

SPECIFICATION forming part of Letters Patent No. 691,837, dated January 28, 1902.

Application filed March 28, 1901. Serial No. 53,314. (No model.)

To all whom it may concern:

Be it known that I, VIRGIL S. BELL, a citizen of the United States, residing at Hayesville, in the county of Keokuk and State of Iowa, have invented a new and useful Incubator, of which the following is a specification.

This invention relates to incubators, and has for its object to provide an improved device of this character which is of great capacity, so that an attendant may have access to the interior thereof for examining the eggs and for any other purpose without exposing the eggs to the outside temperature. It is furthermore designed to provide for effectively ventilating the interior of the device, so as to preserve a proper temperature for the unhatched eggs and also for the recently-hatched chickens, and at the same time prevent the incubator from being chilled too rapidly.

With these and other objects in view the present invention consists in the combination and arrangement of parts, as will be hereinafter more fully described, shown in the accompanying drawings, and particularly pointed out in the appended claim, it being understood that changes in the form, proportion, size, and minor details may be made within the scope of the claim without departing from the spirit or sacrificing any of the advantages of the invention.

In the drawings, Figure 1 is a perspective view of the improved incubator, the front and one side being removed to show the interior thereof. Fig. 2 is a transverse sectional view thereof. Fig. 3 is a sectional view taken at right angles to Fig. 2.

Like characters of reference designate corresponding parts in all of the figures of the drawings.

In carrying out the invention there is built a house or shed having inner and outer walls 1 and 2, that are separated a suitable distance, preferably six inches, and this intervening space is filled with loose earth 3 to form a heat-non-conducting filling, which will maintain the interior air moist. The building is also provided with a peaked roof 4, the ceiling having top and bottom walls 5 and 6, between which is held the filling of earth 7, so that the interior of the building may be entirely housed by earth-filled walls. Access is had to the interior of the shed through a suitable dirt-filled door 8, (shown in Fig. 3 of the drawings,) whereby an attendant may enter the building to inspect the same without exposing the eggs to the outer air for any considerable time.

It is designed to support the eggs in trays 9, arranged in groups, the trays of each group being disposed one above the other, so that the ascending heat may affect all of the eggs. For the support of the trays there is provided a plurality of cleats or bars 10, which are arranged in vertical series and project outwardly from one side of the shed, to which they are connected in any suitable manner. It will be understood that the series of cleats are arranged at regular intervals, so as to slidably support the egg-trays, and the intermediate cleats are wide enough to support the adjacent edges of opposite trays; also, the outer ends of the opposite end series are braced by a hanger 11, pendent from the ceiling of the building, and the lowermost cleats are connected by a cross-bar 12, thus forming a strong and convenient frame for the support of the egg-trays. By this arrangement there is a space between the trays equal to the thickness of a cleat, and these openings or spaces will permit the chickens as they are hatched to escape from the trays and reach the floor of the shed; also, the cleats which support the trays permit the latter to be readily drawn outwardly or slid inwardly to remove or replace them.

The interior of the shed or building is heated by means of a lamp 13, placed upon the floor of the shed, and fresh air is supplied through pipes or inlet-passages 14, formed through the filled walls and adjacent to the bottom of the building, so that the incoming air may become properly heated before rising into contact with the eggs, which are supported at a suitable distance above the inlet-openings.

For ventilating the shed there is provided a hot-air-escape pipe or passage 15, extending through the ceiling of the shed and forming a communication between the interior thereof and the air-space above the ceiling. The peaked roof and the single extensions of the front and rear walls form an upper com-

partment and are provided with sufficient cracks to permit the hot air to escape from this upper chamber or compartment, which thereby partially confines the escaping hot air, causing the same to escape slowly and preventing the lower egg-receiving compartment from becoming suddenly chilled. A damper 16 is located within the escape-pipe between the ends thereof and at a point above the double ceiling, and it is operated by a rod or stem 17, located within the upper chamber or compartment and extending through the front wall of the same and provided with an exteriorly-arranged handle for enabling the damper to be readily controlled. The damper is normally open to permit the free upward passage of the heated air through the ventilating-passage; but the latter is normally closed at a point above the damper by means of an outer terminal valve 19, which is controlled by a thermostat 19′, adapted to open the valve when the air in the incubator has reached a predetermined degree of temperature. The thermostat may be of any desired construction, and the purpose of the two valves and their particular arrangement is to permit the inner valve to be closed should it be desired to cut off the escape of the hot air when the outer valve has been opened by the thermostat.

The incubator is an outhouse or building, and when it is not in use as an incubator it may be employed for a variety of other purposes, such as a storehouse for various articles.

By reason of the fact that the loose earth is confined between opposite walls it will retain its moisture, and additional moisture may be supplied by a water-pan 20, placed upon the floor.

It will be understood that the filling between the inner and outer walls of the incubator may be sawdust, cinders, or other suitable material, and instead of an ordinary illuminating-lamp an oil or gasolene stove may be used, and, in fact, any preferred or particularly-adapted means of heating may be employed.

What is claimed is—

An incubator comprising a housing, a double-walled lower compartment provided with a double ceiling, said housing being also provided with an upper compartment having single walls and provided with cracks or apertures forming escape-openings for hot air, whereby the said upper compartment is adapted to confine partially the escaping hot air and cause the same to escape slowly to prevent the lower compartment from becoming chilled too quickly, a packing of heat-non-conducting material arranged at the walls and ceiling, egg-trays located in the lower compartment, a heat-generating device located below the trays, a short hot-air escape extending through the ceiling and permitting the hot air to pass from the lower compartment and terminating therein, a valve located at the upper end of the hot-air escape and provided with a thermostat to open it automatically, and a damper located in the hot-air escape at a point between the ceiling and the said valve and provided with means for operating it from the exterior to enable the escape of air to be cut off when the upper valve is open, substantially as and for the purpose described.

In testimony that I claim the foregoing as my own I have hereto affixed my signature in the presence of two witnesses.

VIRGIL S. BELL.

Witnesses:
EDWARD DUREE,
A. C. JACOBS.

808 (Defendants' Exhibit P, Letters Patent No. O. P. Scott, September 23, 1902.)

vided with sufficient
t air to escape from
compartment, which
nes the escaping hot
to escape slowly and
gg-receiving compart-
suddenly chilled. A
ithin the escape-pipe
f and at a point above
it is operated by a rod
in the upper chamber
tending through the
nd provided with an
ndle for enabling the
trolled. The damper
rmit the free upward
air through the venti-
he latter is normally
the damper by means
lve 19, which is con-
t 19', adapted to open
in the incubator has
ed degree of tempera-
may be of any desired
purpose of the two
lar arrangement is to
to be closed should it
e escape of the hot air
as been opened by the

outhouse or building,
se as an incubator it
variety of other pur-
ouse for various arti-

t that the loose earth
posite walls it will re-
ditional moisture may
pan 20, placed upon the

d that the filling be-
uter walls of the incu-

bator may be sawdust, cinders, or other suitable material, and instead of an ordinary illuminating-lamp an oil or gasolene stove may be used, and, in fact, any preferred or particularly-adapted means of heating may be employed.

What is claimed is—

An incubator comprising a housing, a double-walled lower compartment provided with a double ceiling, said housing being also provided with an upper compartment having single walls and provided with cracks or apertures forming escape-openings for hot air, whereby the said upper compartment is adapted to confine partially the escaping hot air and cause the same to escape slowly to prevent the lower compartment from becoming chilled too quickly, a packing of heat-non-conducting material arranged at the walls and ceiling, egg-trays located in the lower compartment, a heat-generating device located below the trays, a short hot-air escape extending through the ceiling and permitting the hot air to pass from the lower compartment and terminating therein, a valve located at the upper end of the hot-air escape and provided with a thermostat to open it automatically, and a damper located in the hot-air escape at a point between the ceiling and the said valve and provided with means for operating it from the exterior to enable the escape of air to be cut off when the upper valve is open, substantially as and for the purpose described.

In testimony that I claim the foregoing as my own I have hereto affixed my signature in the presence of two witnesses.

VIRGIL S. BELL.

Witnesses:
EDWARD DUREE,
A. C. JACOBS.

808 (Defendants' Exhibit P, Letters Patent No. 709,650 to O. P. Scott, September 23, 1902.)

No. 709,650. Patented Sept. 23, 1902.

O. P. SCOTT.

INCUBATOR.

(Application filed Sept. 23, 1901.)

(No Model.) 2 Sheets—Sheet 1.

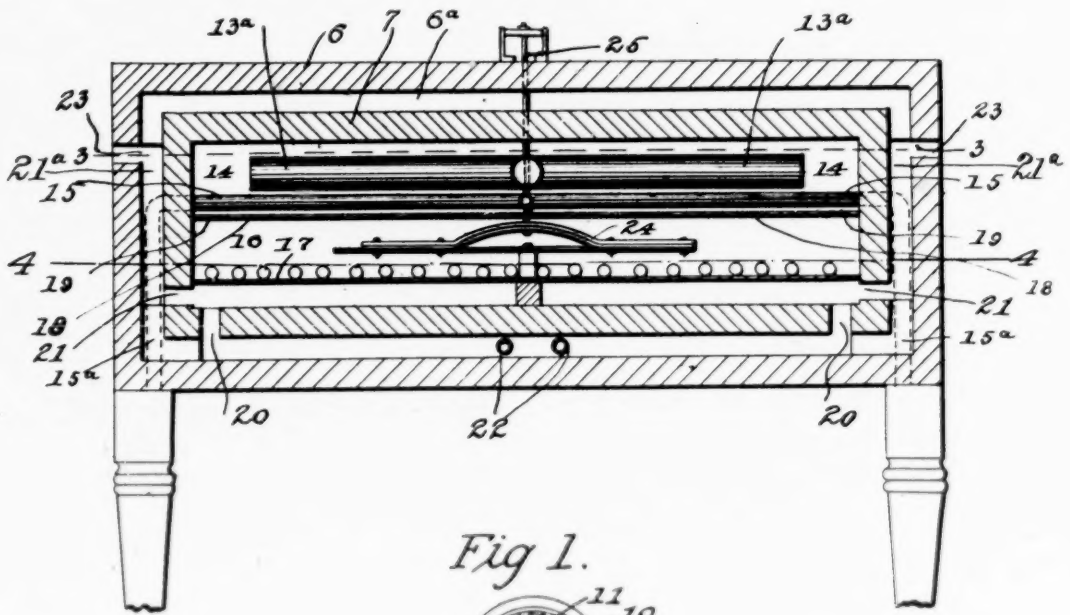

Fig 1.

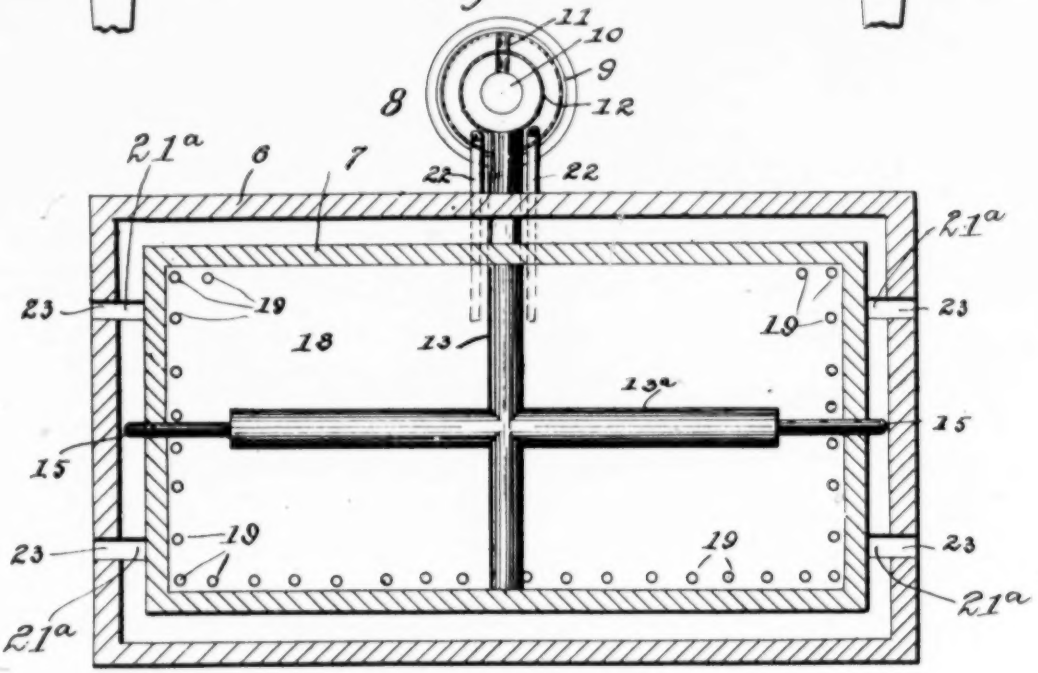

Fig. 3.

WITNESSES:

F. A. Barron

O. E. Murray.

INVENTOR

Oliver P. Scott

BY

Milo B. Stevens & Co.

ATTORNEYS.

No. 709,650. Patented Sept. 23, 1902.

O. P. SCOTT.

INCUBATOR.

(Application filed Sept. 23, 1901.)

(No Model.) 2 Sheets—Sheet 2.

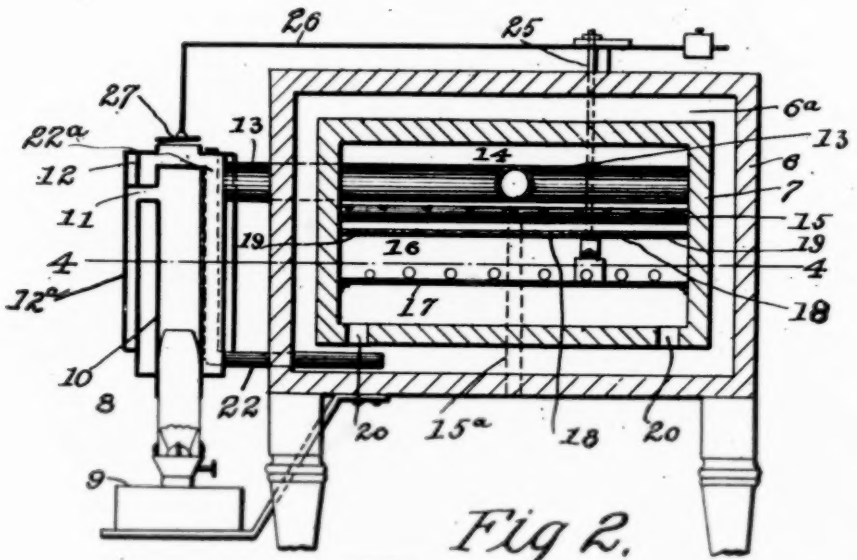

Fig 2.

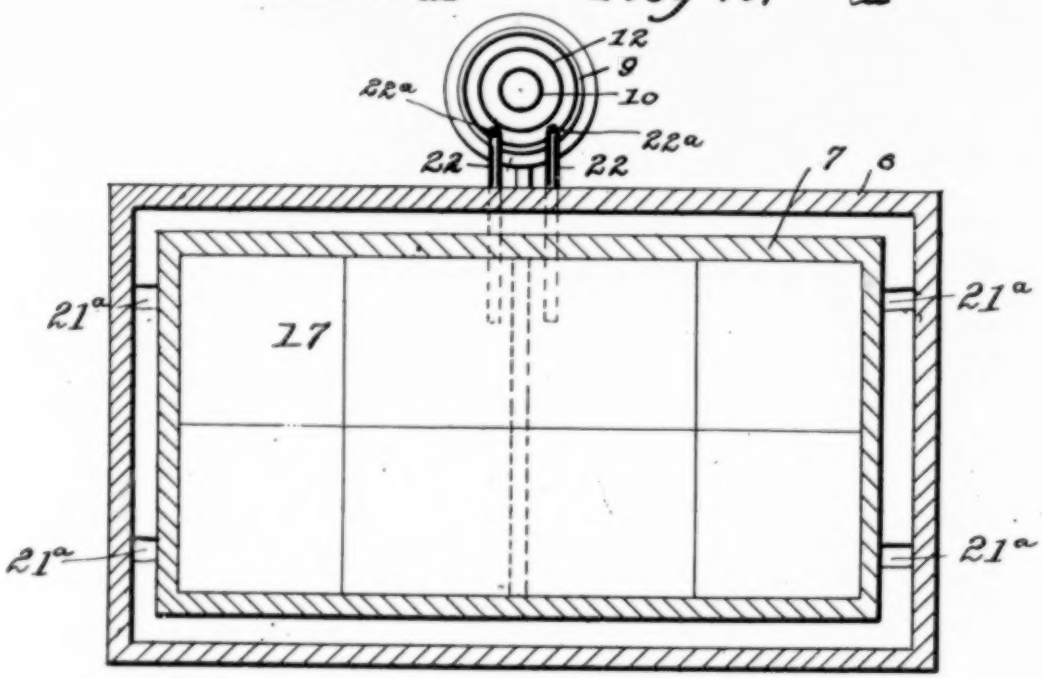

Fig. 4.

WITNESSES:

F. A. Farrow

O. E. Murray

INVENTOR

Oliver P. Scott

BY

Milo B. Stevens & Co.

ATTORNEYS.

UNITED STATES PATENT

OLIVER P. SCOTT, OF CHICAGO, ILL

INCUBATOR.

SPECIFICATION forming part of Letters Patent No. 709,650, da

Application filed September 23, 1901. Serial No. 76,191. (N

To all whom it may concern:

Be it known that I, OLIVER P. SCOTT, a citizen of the United States, residing at Chicago, in the county of Cook and State of Illinois, have invented certain new and useful Improvements in Incubators; and I do hereby declare the following to be a full, clear, and exact description of the invention, such as will enable others skilled in the art to which it appertains to make and use the same, reference being had to the accompanying drawings, and to the figures of reference marked thereon, which form a part of this specification.

This invention relates to incubators. Its object is to provide improved means for regulating the temperature of the air in the incubator and also to improve the quality of the air admitted with respect to both the amount of oxygen and the amount of moisture therein. A proper supply of oxygen and moisture in the air admitted to incubators is essential, and the former is supplied by an improved construction whereby the air does not pass through or in contact with the heater-flame, so that no fumes pass into the egg-chamber, and a proper amount of moisture is supplied by admitting fresh cold air otherwise than through the heater, whereby the deficiency of moisture in the air which has passed through the heater is corrected.

The invention further comprises separated air and egg chambers having therebetween a plate with perforations near the outer edges thereof, together with hot and cold air inlet pipes in the air-chamber having therein a number of small discharge-openings in several parts of the chamber, whereby the hot and cold air currents are thoroughly mixed in the air-chamber before reaching the eggs and the air is delivered into the egg-chamber near the corners and outer parts thereof. When a hot-air pipe is passed directly into or through an egg-chamber, the parts distant from the pipe are liable to be colder than the nearer parts, so that an equable temperature is not preserved.

A further object of my invention is to improve the circulation of air through the incubator by passing some of the outlet-pipes under the influence of the heater, so as to accelerate the delive
tion from the egg

With these an
embodiment of m
described, and is
nying drawings, i

Figure 1 is a lo
Fig. 2 is a vertica
horizontal section
and Fig. 4 is a ho
4 4 of Figs. 1 and

Referring partic
outer case of the i
and the inner cas
between which ma
the bottoms of the
eral wool, or other
heat. The heater
ing a lamp 9, the
nicates with an in
closed at the top.
with this cylinder
from the lamp wit
12 into a superheat
it passes down a
bottom thereof int
12 forms a heating
entering the drum
pipe 13, extendin
outer casings, con
an air-mixing cha
of the inner casing
branches 13ª, and
are provided with p
the air is discharg
be understood.

Within the mixi
in close proximity
cold-air pipe 15.
tend through the e
ner casing and are
tensions 15ª, which
bottom of the oute
air. The pipe 15 i
tensions and perfo
air pipe.

The egg-chamber
part of the inner c
the usual egg-trays
metal plate separa
from the egg-cham

Patented Sept. 23, 1902.

O. P. SCOTT.

INCUBATOR.

(Application filed Sept. 23, 1901.)

2 Sheets—Sheet 2.

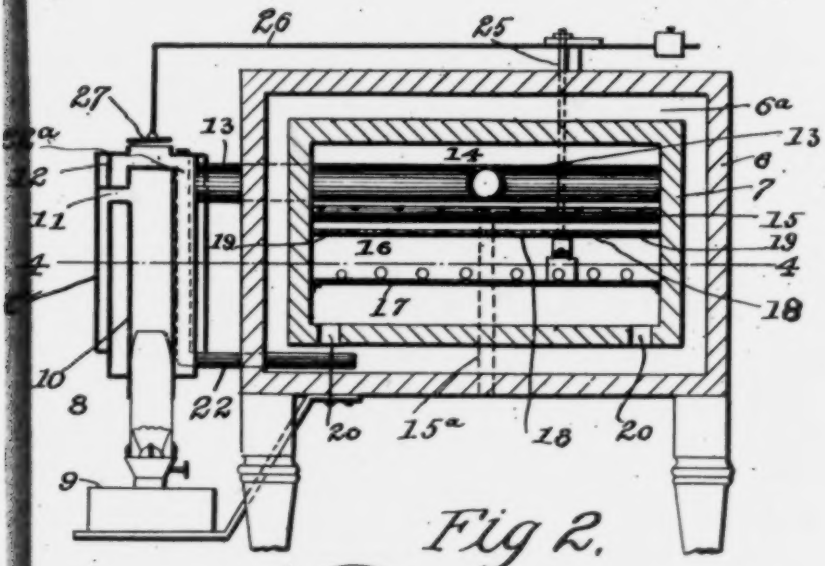

Fig 2.

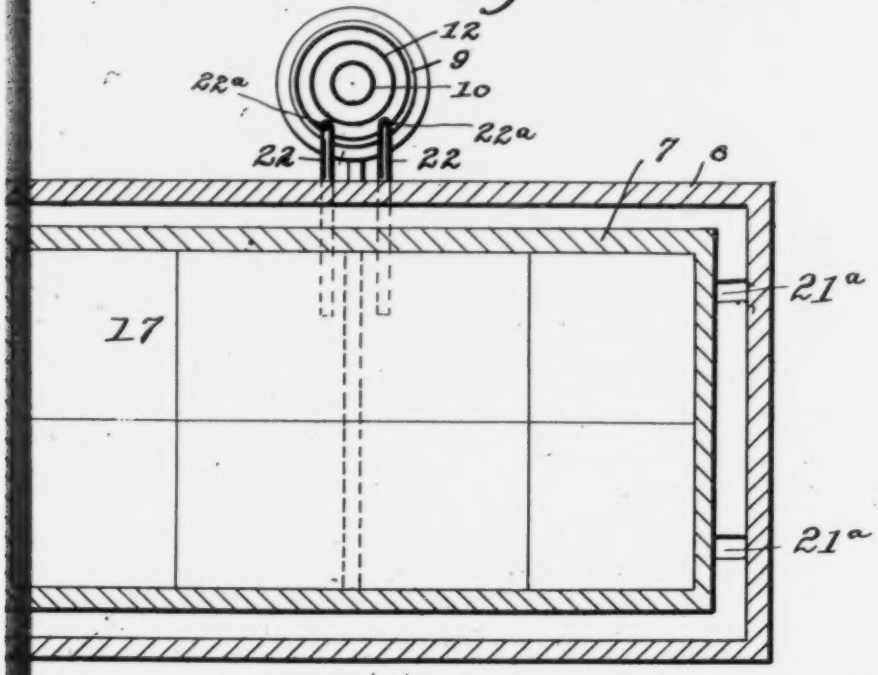

Fig. 4.

ES:

rm.

urray

INVENTOR

Oliver P. Scott

BY

Milo B. Stevens & Co.

ATTORNEYS.

UNITED STATES PATENT OFFICE.

OLIVER P. SCOTT, OF CHICAGO, ILLINOIS.

INCUBATOR.

SPECIFICATION forming part of Letters Patent No. 709,650, dated September 23, 1902.

Application filed September 23, 1901. Serial No. 76,191. (No model.)

To all whom it may concern:

Be it known that I, OLIVER P. SCOTT, a citizen of the United States, residing at Chicago, in the county of Cook and State of Illinois, have invented certain new and useful Improvements in Incubators; and I do hereby declare the following to be a full, clear, and exact description of the invention, such as will enable others skilled in the art to which it appertains to make and use the same, reference being had to the accompanying drawings, and to the figures of reference marked thereon, which form a part of this specification.

This invention relates to incubators. Its object is to provide improved means for regulating the temperature of the air in the incubator and also to improve the quality of the air admitted with respect to both the amount of oxygen and the amount of moisture therein. A proper supply of oxygen and moisture in the air admitted to incubators is essential, and the former is supplied by an improved construction whereby the air does not pass through or in contact with the heater-flame, so that no fumes pass into the egg-chamber, and a proper amount of moisture is supplied by admitting fresh cold air otherwise than through the heater, whereby the deficiency of moisture in the air which has passed through the heater is corrected.

The invention further comprises separated air and egg chambers having therebetween a plate with perforations near the outer edges thereof, together with hot and cold air inlet pipes in the air-chamber having therein a number of small discharge-openings in several parts of the chamber, whereby the hot and cold air currents are thoroughly mixed in the air-chamber before reaching the eggs and the air is delivered into the egg-chamber near the corners and outer parts thereof. When a hot-air pipe is passed directly into or through an egg-chamber, the parts distant from the pipe are liable to be colder than the nearer parts, so that an equable temperature is not preserved.

A further object of my invention is to improve the circulation of air through the incubator by passing some of the outlet-pipes under the influence of the heater, so as to accelerate the delivery of air by creating a suction from the egg-chamber.

With these and other objects in view an embodiment of my invention is hereinafter described, and is illustrated in the accompanying drawings, in which—

Figure 1 is a longitudinal vertical section. Fig. 2 is a vertical cross-section. Fig. 3 is a horizontal section on the line 3 3 of Fig. 1, and Fig. 4 is a horizontal section on the line 4 4 of Figs. 1 and 2.

Referring particularly to the drawings, the outer case of the incubator is indicated at 6, and the inner case at 7, having the space 6^a between which may be filled, except between the bottoms of the casings, with cotton, mineral wool, or other suitable non-conductor of heat. The heater is indicated at 8, comprising a lamp 9, the chimney of which communicates with an interior cylinder 10, which is closed at the top. A pipe 11 communicates with this cylinder and conducts the fumes from the lamp without the cylinder or drum 12 into a superheating outer drum 12^a, whence it passes down and is discharged from the bottom thereof into the outer air. The drum 12 forms a heating-chamber for the pure air entering the drum at the bottom thereof. A pipe 13, extending through the inner and outer casings, conducts the heated air into an air-mixing chamber 14, located in the top of the inner casing. The pipe 13 has lateral branches 13^a, and the pipe and its branches are provided with perforations through which the air is discharged and distributed, as will be understood.

Within the mixing-chamber 14, below and in close proximity to the hot-air pipe 13, is a cold-air pipe 15. The ends of this pipe extend through the end or side walls of the inner casing and are provided with vertical extensions 15^a, which communicate through the bottom of the outer casing with the outside air. The pipe 15 is provided with lateral extensions and perforations similar to the hot-air pipe.

The egg-chamber 16 is situated in the lower part of the inner casing and is provided with the usual egg-trays 17. A sheet-iron or other metal plate separates the mixing-chamber 14 from the egg-chamber 16. This plate is indi-

cated at 18 and at the ends and outer edge thereof is provided with perforations 19. By this construction the hot and cold air discharged from the pipes in the mixing-chamber is mixed or commingled and then passes through the perforations downwardly into the egg-chamber. Inasmuch as the perforations are at the edge of the plate, the air is delivered at the edges and corners of the egg-chamber, whereby a more equable temperature is preserved therein. After having passed over the eggs the stale air is discharged through openings 20 in the bottom of the inner case into the space between the bottoms of the casings and through openings 21 into passages 21^a between the sides of the casings, which passages communicate with the openings 23 in the outer casing. Pipes 22 extend from the space between the casing-bottoms outwardly through the outer casing in proximity to the heater and extend thence upwardly through the drum thereof, as indicated at 22^a. By this means the air in the pipes is heated, causing an accelerated discharge and effectively promoting the circulation of air through the incubator. The air escaping through the openings 21 passes by a normal flow through the passages 21^a between the casings and is discharged through the openings 23 in the outer casing.

The incubator is also provided with a suitable thermostat 24, connected by a rod 25 with a lever 26, by which a damper 27 to the drum is operated.

Having thus described the invention, what is claimed as new, and desired to be secured by Letters Patent, is—

1. In an incubator, in combination, outer and inner casings, air-mixing and egg chambers in the inner casing, a perforated air-spreading partition between said chambers, to deliver air from the mixing-chamber to various parts of the egg-chamber, and hot and cold air supply pipes having numerous adjacent discharge-openings in remote parts of the mixing-chamber.

2. In an incubator, in combination, a casing, an egg-chamber and an air-mixing chamber therein, hot-air and cold-air inlet pipes communicating with the mixing-chamber, and a perforated partition between the mixing-chamber and the egg-chamber.

3. In an incubator, in combination, an egg-chamber and an air-chamber therein, an inlet air-pipe having a number of small openings in remote parts of the air-chamber, and a partition between the egg-chamber and the air-chamber having openings therein only near the outer edge thereof.

4. In an incubator, in combination, a casing, a perforated air-distributing partition therein forming air and egg chambers, and foraminate hot and cold air supply pipes extending in proximity to remote parts of the air-chamber.

5. An incubator comprising inner and outer casings spaced apart, an egg-chamber in the inner casing, a heater, an air-supply pipe extending therefrom into the inner casing, air-discharge openings in the bottom of the inner casing communicating with the space between the bottoms of the casings, a tube extending from said space to the heater whereby the air is heated to accelerate the discharge, and independent discharge-passages extending from the egg-chamber through the casings.

In testimony whereof I affix my signature in presence of two witnesses.

OLIVER P. SCOTT.

Witnesses:
NELLIE FELTSKOG,
HARRY G. BATCHELOR.

814 (Defendants' Exhibit P, Letters Patent No.
F. C. Perkins, December 1, 1903.)

ends and outer edge
perforations 19. By
ot and cold air dis-
in the mixing-cham-
ngled and then passes
ons downwardly into
smuch as the perfora-
the plate, the air is
and corners of the egg-
ore equable tempera-
erein. After having
the stale air is dis-
ings 20 in the bottom
the space between the
and through openings
tween the sides of the
es communicate with
uter casing. Pipes 22
between the casing-
ough the outer casing
ter and extend thence
drum thereof, as indi-
means the air in the
g an accelerated dis-
promoting the circu-
e incubator. The air
openings 21 passes by
the passages 21ª be-
is discharged through
outer casing.
o provided with a suit-
onnected by a rod 25
ich a damper 27 to the

ed the invention, what
desired to be secured by

in combination, outer
mixing and egg cham-
ing, a perforated air-
tween said chambers,
mixing-chamber to va-
rious parts of the egg-chamber, and hot and cold air supply pipes having numerous adjacent discharge-openings in remote parts of the mixing-chamber.

2. In an incubator, in combination, a casing, an egg-chamber and an air-mixing chamber therein, hot-air and cold-air inlet pipes communicating with the mixing-chamber, and a perforated partition between the mixing-chamber and the egg-chamber.

3. In an incubator, in combination, an egg-chamber and an air-chamber therein, an inlet air-pipe having a number of small openings in remote parts of the air-chamber, and a partition between the egg-chamber and the air-chamber having openings therein only near the outer edge thereof.

4. In an incubator, in combination, a casing, a perforated air-distributing partition therein forming air and egg chambers, and foraminate hot and cold air supply pipes extending in proximity to remote parts of the air-chamber.

5. An incubator comprising inner and outer casings spaced apart, an egg-chamber in the inner casing, a heater, an air-supply pipe extending therefrom into the inner casing, air-discharge openings in the bottom of the inner casing communicating with the space between the bottoms of the casings, a tube extending from said space to the heater whereby the air is heated to accelerate the discharge, and independent discharge-passages extending from the egg-chamber through the casings.

In testimony whereof I affix my signature in presence of two witnesses.

OLIVER P. SCOTT.

Witnesses:
NELLIE FELTSKOG,
HARRY G. BATCHELOR.

814 (Defendants' Exhibit P, Letters Patent No. 745,458 to F. C. Perkins, December 1, 1903.)

668

No. 745,458. PATENTED DEC. 1, 1903.

F. C. PERKINS.

ELECTRICAL INCUBATOR.

APPLICATION FILED JULY 30, 1903.

NO MODEL. 2 SHEETS—SHEET 1.

Fig. 1.

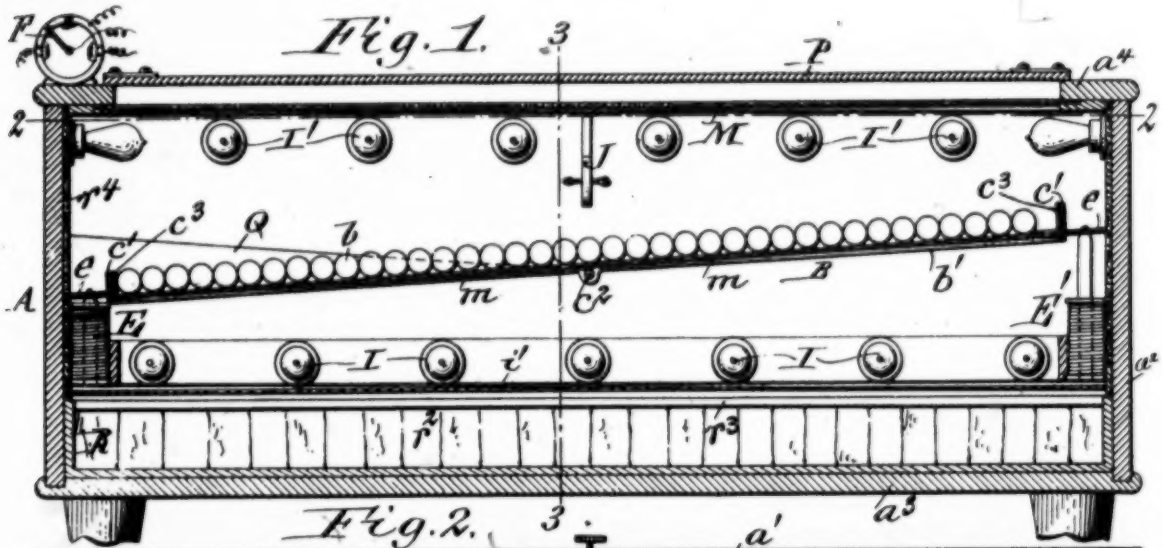

Fig. 2.

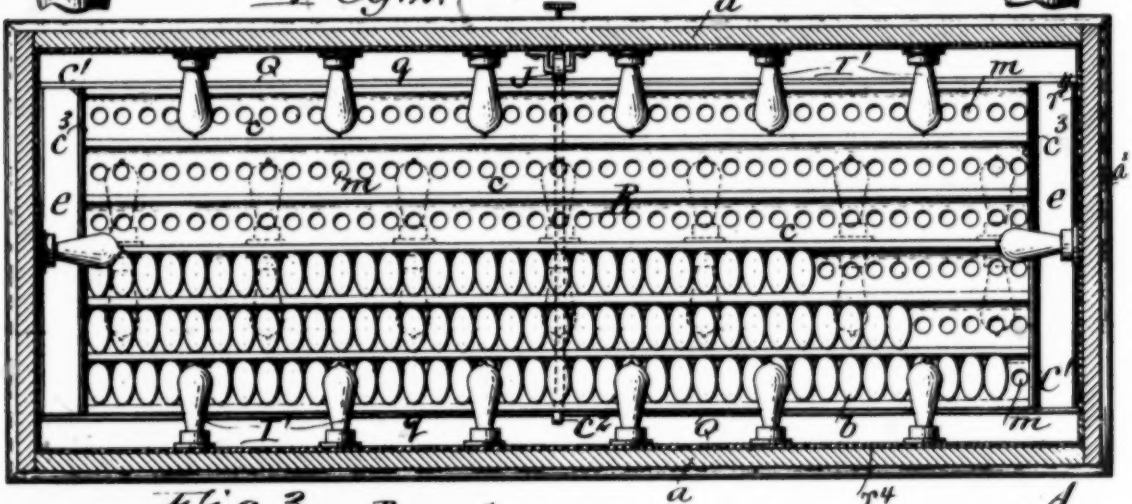

Fig. 3.

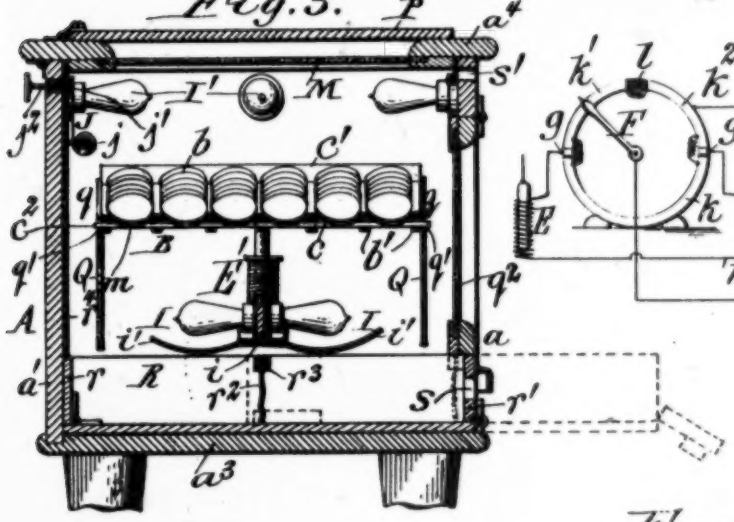

Fig. 4.

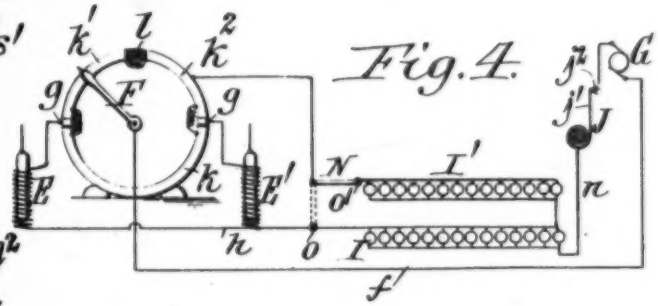

Witnesses:
Louis A. Gratz.
Robert Weitknecht.

Frank C. Perkins,
Inventor
By Geyer & Popp
Attorneys

670

F. C. PERKINS.

ELECTRICAL INCUBATOR.

APPLICATION FILED JULY 30, 1903.

NO MODEL.

2 SHEETS—SHEET 2

Fig. 5.

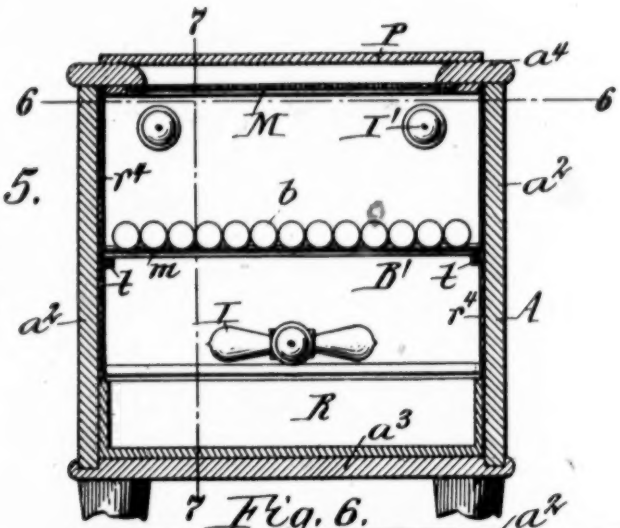

Fig. 6.

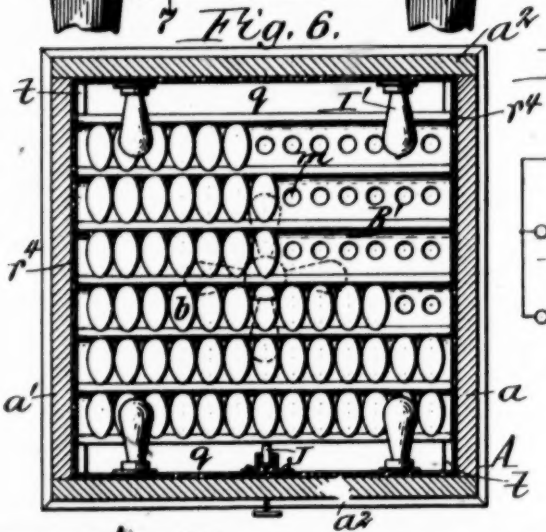

Fig. 8.

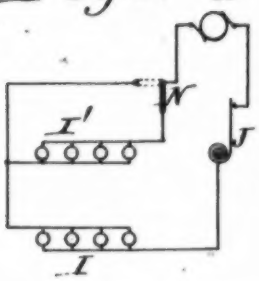

Fig. 9.

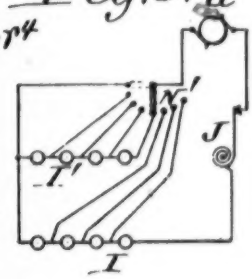

Fig. 7

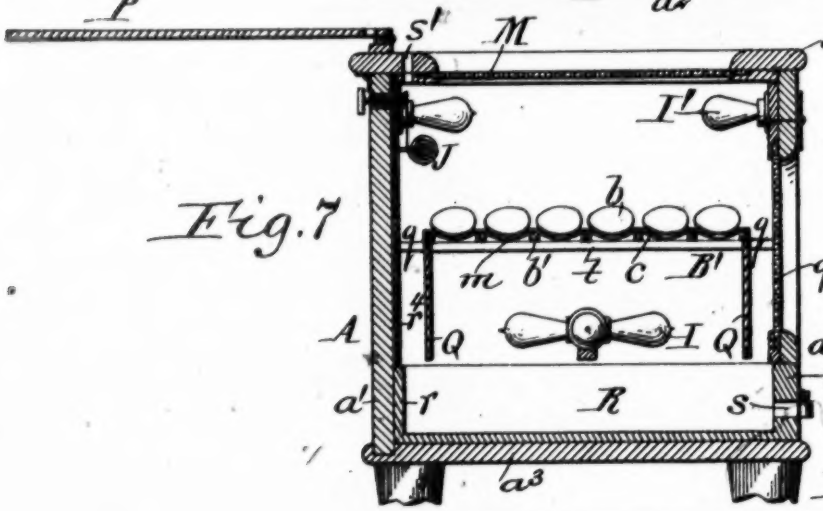

Fig. 11.

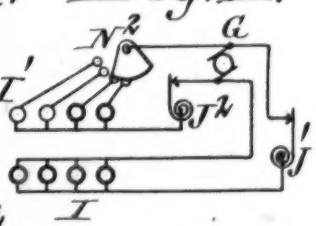

Fig. 10.

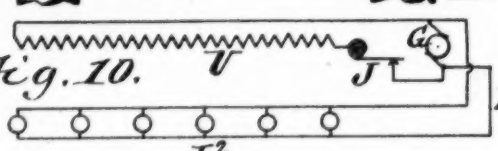

Witnesses:
Louis W. Gratz.
Robert Weitkenecht.

Frank C. Perkins,
Inventor
By Geyer & Popp
Attorneys

No. 745,458. P

UNITED STATES PATENT

FRANK CLINTON PERKINS, OF BUFFALO, N

ELECTRICAL INCUBATOR.

SPECIFICATION forming part of Letters Patent No. 745,458, d

Application filed July 30, 1903. Serial No. 167,574. (No m

To all whom it may concern:

Be it known that I, FRANK CLINTON PERKINS, a citizen of the United States, residing at Buffalo, in the county of Erie and State of New York, have invented new and useful Improvements in Electrical Incubators, of which the following is a specification.

The principal object of this invention is to provide an incubator in which the eggs are hatched and the chicks are kept warm by means of an electric heater which, together with a thermostatic regulator, is arranged directly within the incubating-chamber.

Another object of this invention is to provide simple automatic means for turning the eggs and also cooling the same periodically.

This invention has the further object to so organize the incubator that the eggs may be readily tested without removing the same from the incubator.

In the accompanying drawings, consisting of two sheets, Figure 1 is a longitudinal sectional elevation of an incubator embodying my improvements. Fig. 2 is a horizontal section thereof in line 2 2, Fig. 1. Fig. 3 is a vertical transverse section in line 3 3, Fig. 1. Fig. 4 is a diagrammatic view showing one arrangement of wiring the electrical appliances of the incubator. Fig. 5 is a vertical section showing a modification of my improved incubator. Fig. 6 is a horizontal section thereof in line 6 6, Fig. 5. Fig. 7 is a vertical section in line 7 7, Fig. 5. Figs. 8, 9, 10, and 11 are diagrammatic views showing modifications of the electrical appliances of the incubator.

Similar letters of reference indicate corresponding parts throughout the several views.

Referring to Figs. 1 to 4, A represents the inclosing casing of the incubator, which preferably consists of longitudinal side walls a a', transverse end walls a^2, a bottom a^3, and a top a^4. Within this chamber, between the top and bottom thereof, is arranged the rack or tray B, upon which the eggs b are supported while being hatched. This tray preferably consists of a plurality of longitudinal bars b', which are arranged lengthwise and parallel side by side in the incubating-chamber and connected by a covering consisting, preferably, of porous or perforated material, such as cloth or woven wire, which permits the passage of heat. Th
between the bars
tudinal troughs o
troughs being ada
nal row of eggs.
porting-bars are ar
c', which project a
closures at the e
venting the eggs f
For effecting the
is pivoted at its m
of a transverse r
turn in a vertica
trough of the tray
gitudinal row of e
cient length being
end thereof to pe
upon rolling the
tilting or oscillati
trough will roll al
tions the extent
trough, which spa
eggs are arrested
a half-turn. The
tray alternately i
fected by electri
Figs. 1 and 3, so
are preferably em
same being arran
derneath opposite
magnet has its co
adjacent wall of
mature is secured
jection e on the
Upon energizing
end of the tray
will be depressed
thereby causing
depressed end of
turn. Upon now
nected with the e
deënergizing the
be tilted in the
the eggs to be aga
the opposite end
pose of preventi
broken by sudden
c' the inner sides
with a cushion-f
material. In or
of the eggs to be
predetermined pe

F. C. PERKINS.

ELECTRICAL INCUBATOR.

APPLICATION FILED JULY 30, 1903.

2 SHEETS—SHEET 2.

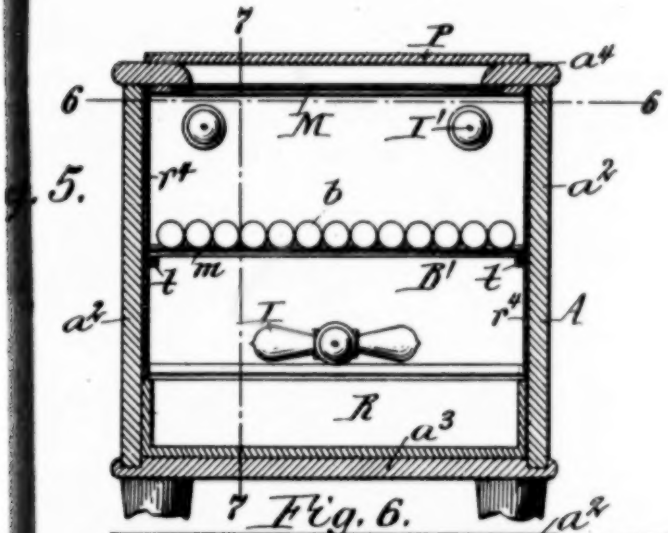

Fig. 6.

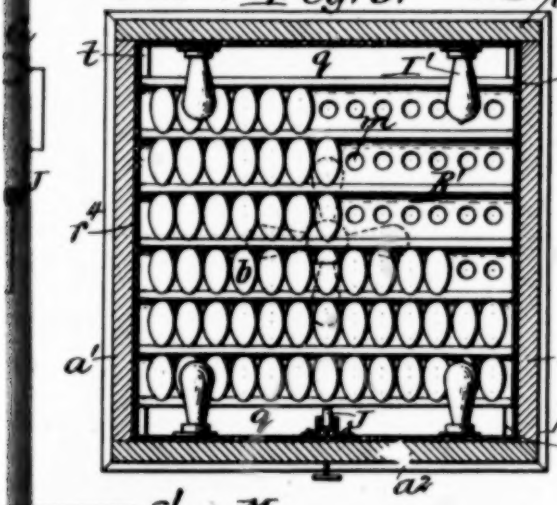

Fig. 9.

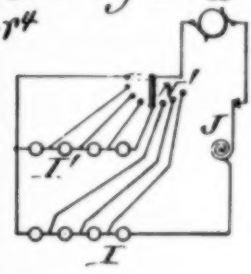

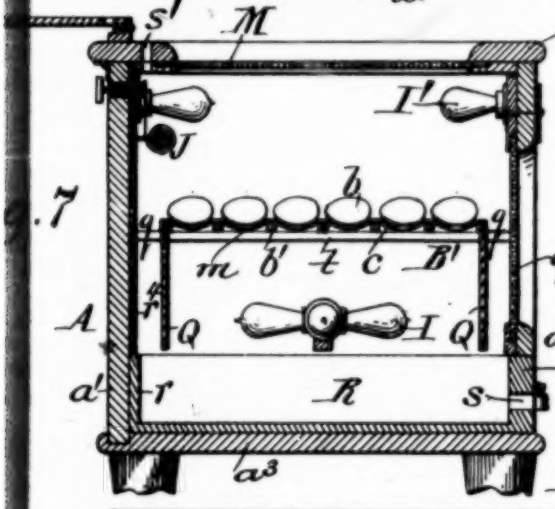

Fig. 11.

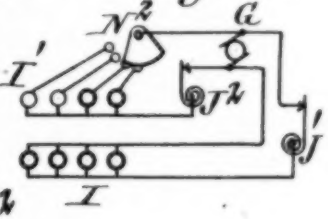

Fig. 10.

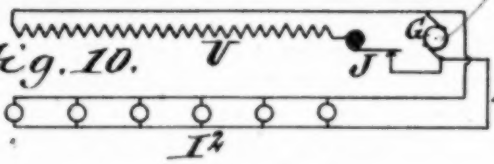

Frank C. Perkins,
Inventor

By Geyer & Popp
Attorneys

UNITED STATES PATENT OFFICE.

FRANK CLINTON PERKINS, OF BUFFALO, NEW YORK.

ELECTRICAL INCUBATOR.

SPECIFICATION forming part of Letters Patent No. 745,458, dated December 1, 1903.

Application filed July 30, 1903. Serial No. 167,574. (No model.)

To all whom it may concern:

Be it known that I, FRANK CLINTON PERKINS, a citizen of the United States, residing at Buffalo, in the county of Erie and State of New York, have invented new and useful Improvements in Electrical Incubators, of which the following is a specification.

The principal object of this invention is to provide an incubator in which the eggs are hatched and the chicks are kept warm by means of an electric heater which, together with a thermostatic regulator, is arranged directly within the incubating-chamber.

Another object of this invention is to provide simple automatic means for turning the eggs and also cooling the same periodically.

This invention has the further object to so organize the incubator that the eggs may be readily tested without removing the same from the incubator.

In the accompanying drawings, consisting of two sheets, Figure 1 is a longitudinal sectional elevation of an incubator embodying my improvements. Fig. 2 is a horizontal section thereof in line 2 2, Fig. 1. Fig. 3 is a vertical transverse section in line 3 3, Fig. 1. Fig. 4 is a diagrammatic view showing one arrangement of wiring the electrical appliances of the incubator. Fig. 5 is a vertical section showing a modification of my improved incubator. Fig. 6 is a horizontal section thereof in line 6 6, Fig. 5. Fig. 7 is a vertical section in line 7 7, Fig. 5. Figs. 8, 9, 10, and 11 are diagrammatic views showing modifications of the electrical appliances of the incubator.

Similar letters of reference indicate corresponding parts throughout the several views.

Referring to Figs. 1 to 4, A represents the inclosing casing of the incubator, which preferably consists of longitudinal side walls a a', transverse end walls a^2, a bottom a^3, and a top a^4. Within this chamber, between the top and bottom thereof, is arranged the rack or tray B, upon which the eggs b are supported while being hatched. This tray preferably consists of a plurality of longitudinal bars b', which are arranged lengthwise and parallel side by side in the incubating-chamber and connected by a covering consisting, preferably, of porous or perforated material, such as cloth or woven wire, which permits the passage of heat. That portion of the covering between the bars is depressed to form longitudinal troughs or channels c, each of said troughs being adapted to receive a longitudinal row of eggs. At opposite ends of the supporting-bars are arranged stop plates or guards c', which project above the troughs and form closures at the ends of the troughs for preventing the eggs from rolling out of the same. For effecting the turning of the eggs the tray is pivoted at its middle, preferably by means of a transverse rod c^2, so that the tray can turn in a vertical plane. In practice each trough of the tray is nearly filled with a longitudinal row of eggs, a vacant space of sufficient length being left in the trough at one end thereof to permit the eggs to be reversed upon rolling the same in the tray. Upon tilting or oscillating the tray the eggs in each trough will roll alternately in opposite directions the extent of the clear space in said trough, which space is so determined that the eggs are arrested when the same have made a half-turn. The rocking movement of the tray alternately in opposite directions is effected by electrical means. As shown in Figs. 1 and 3, solenoid-electromagnets E E' are preferably employed for this purpose, the same being arranged within the chamber underneath opposite ends of the egg-tray. Each magnet has its coil preferably secured to the adjacent wall of the chamber, while its armature is secured at its upper end to a projection e on the adjacent end of the tray. Upon energizing one of these magnets that end of the tray connected with its solenoid will be depressed and its opposite end raised, thereby causing the eggs to roll toward the depressed end of the tray and make half a turn. Upon now energizing the magnet connected with the elevated end of the tray and deënergizing the other magnet the tray will be tilted in the opposite direction, causing the eggs to be again turned by rolling toward the opposite end of the tray. For the purpose of preventing the end eggs from being broken by sudden contact with the stop-plates c' the inner sides of the same are provided with a cushion-facing c^3, of felt or similar material. In order to cause this reversal of the eggs to be effected automatically at predetermined periods, an automatic switch

is provided, whereby the coils of the solenoid-magnets are alternately connected with and disconnected from an electric generator. This switch may be of any suitable construction; but I prefer for this purpose that shown in Fig. 4, which is constructed as follows: F represents a rotary switch blade or arm which may be turned, say, once every twenty-four hours by a motor of any suitable construction—for instance, a spring-motor, such as is commonly used in clocks. This switch-arm is connected by a wire *f* with one pole of an electric generator or dynamo G of any suitable construction. On diametrically opposite sides of this switch-arm are arranged two contacts *g g*, each of which is connected with one end of one of the solenoid-magnet coils. The opposite ends of both coils are connected by a wire *h*, which is indirectly connected with the opposite pole of the electric generator. By this means the switch-arm upon rotating engages the contacts *g g* alternately at intervals of twelve hours, whereby the magnets are rendered alternately operative for oscillating the tray and turning the eggs twice a day.

Within the incubating-chamber is arranged an electric heater, which raises the temperature within the incubator sufficiently high to hatch the eggs and keep the resulting chicks warm. Although various means may be employed for translating electrical energy into heat suitable for this purpose, I prefer a plurality of incandesent lamps I I', because the same can be utilized not only for heating the incubator, but also as an illuminator to provide the necessary illumination for testing the eggs, as will be hereinafter described. As shown in the drawings, a set or group of incandescent electric lamps I is arranged in the incubating-chamber below the egg-tray, and a similar group of incandescent lamps I' is arranged in the chamber above the egg-tray. These lamps are so arranged relatively to one another and the egg-tray to produce practically a uniform temperature in all parts of the incubator. As shown in Figs. 1, 2, and 3, the lamps I' of the upper group are arranged around the inner side of the incubating-chamber, while the lamps I of the lower group are preferably mounted on opposite sides of a longitudinal bar *i*, which is arranged centrally in the lower part of the chamber and secured at opposite ends to the adjacent end walls of the chamber. These lamps may either be plain white or suitably colored to modify the light, if desired. The electrical circuit containing these lamps includes a thermostat J, which is arranged within the incubator or in a space communicating therewith and operates to control the electric circuit of the lamps. Various kinds of thermostats may be utilized for this purpose; but I prefer that shown in the drawings, which consists, essentially, of a coil *j* of differential layers or strips of metal having its inner end secured to a fixed support, while its outer movable end carries an electric contact *j'*, which is engaged with and disengaged from a stationary contact j^2 of the circuit as the coil expands or contracts, due to the rise and fall of the temperature in the incubating-chamber. The stationary contact j^2 preferably consists of a screw which is accessible from the outside of the incubating-chamber and which upon being turned permits of varying the time of opening the lamp or heater circuit according to the degrees of temperature which it is desired to maintain in the incubator. In operation the thermostat closes the circuit and causes the lamps to be illuminated and generate heat, while if the temperature in the incubating-chamber rises above normal the thermostat opens the electric circuit and extinguishes the lamps, causing the temperature in the chamber to be reduced. After the temperature has again been reduced to normal the thermostat reëstablishes the electric circuit containing the lamps, whereby the latter are again lighted and generate heat.

It has been found in practice that the eggs require to be cooled off at intervals in order to produce proper incubation, and means have therefore been provided whereby this can be effected automatically. For this purpose the circuit of the heater-lamps is combined with the switch-arm F, and segmental contacts *k* k' k^2 are provided, with which said arm is adapted to engage. The lamp-contact *k* extends in the form of a semicircle from one magnet-contact *g* to the other, while the contacts k' k^2 are in the form of quadrants and extend toward each other from opposite sides of the magnet-contacts and are separated at their opposing ends by an insulating-section *l*. The several heater or lamp contacts *k* k' k^2 are electrically connected with each other and with one side of the lamps, and as the switch-arm F sweeps over the same the lamps are placed in circuit and illuminated. As the arm sweeps over the insulating-section the circuit of the lamps is broken and the latter are extinguished. The insulating-section is of such length that the lamps will remain extinguished a sufficient time to effect the required cooling of the eggs. As shown in Fig. 4, one or both groups of lamps may form part of the electric circuit of the magnets when the latter are operative.

In order to permit of testing the eggs while the same are in the incubator, means are provided whereby the light in the incubator below the eggs is caused to illuminate the same and permit inspection thereof. As shown in Figs. 1, 2, and 3, each of the egg-troughs is provided with a plurality of openings *m* in its lowermost part, over each of which except one an egg is located in the normal position of the tray. This causes the light from below the tray to shine upwardly through the eggs and permits of inspecting the quality of the eggs from above. By placing a glass pane M in the top of the chamber this inspection

can take place from the outside of the incubator, thereby avoiding the necessity of opening the incubator and cooling the eggs while inspecting the same. Furthermore, the eggs may thus be under continuous examination throughout the period of incubation, and poor eggs may be removed without handling those in good condition. For the purpose of intensifying the light below the eggs during inspection the upper group of lamps at this time is cut out and the circuit is concentrated upon the lower group of lamps, this being accomplished by means of a switch N. It is immaterial as to the particular manner in which the lamps are coupled with the electric generator and other parts of the apparatus for accomplishing this result. As shown in Fig. 4, each group of lamps is connected in parallel, and the corresponding ends of both groups are connected by a wire n with the movable contact j' of the thermostat, while the stationary contact j^2 of the latter is connected with the pole of the dynamo opposite to that with which the contact-arm F is connected. The opposite ends of the groups of lamps are provided with contacts $o\ o'$, either of which can be engaged by the switch N, which is connected with the sectional contacts $k\ k'\ k^2$. When the incubator is in operation and the switch N is engaged with the contact o' of the upper group of lamps, as shown in full lines in Fig. 4, the current from the dynamo passes through both groups in series, and the upper and lower parts of the incubating-chamber are both heated and illuminated, but not at full candle-power. When it is desired to test the eggs, the switch N is disengaged from the contact o' of the upper group of lamps and engaged with the contact o of the lower group of lamps, as shown by dotted lines in Fig. 4. In this position of the switch the current of the dynamo only passes through the lower set of lamps, the resistance of the upper lamps being cut out of circuit, thereby illuminating the lower lamps more brilliantly than when both sets of lamps are in use. This increased brilliancy of the lower lamps increases the illumination of the eggs from the bottom and permits of more easily detecting any defective eggs in the tray. After inspection the switch is restored to its position for placing the upper set of lamps again in circuit for resuming the normal operation of the incubator. The illumination of the eggs for testing the same may be further increased by reflecting the light in the lower part of the incubating-chamber upwardly. This can be done by applying white paint to the interior of the incubating-chamber below the tray between the partitions Q or by placing reflectors i' underneath the lamps, as shown in Figs. 1 and 3. The interior of the chamber above the tray and the sides of the passages q are preferably painted black to prevent reflection of light above the eggs.

In order to prevent the glass in the top of the incubating-chamber from being broken

and to confine the
which is placed o
tion. This cover
side to the top o
and the top in tu
the chamber to aff
above for placing
moving the same

After the chic
eggs they are hou
incubator, which
until the chicks a
permit of removi
bator. In order
pass from the tra
incubator-chamb
from the adjacent
one or both sides
through which th
into the space be
the light of the lo
ing upwardly thr
fering with testin
ters or partitions
in the chamber o
tray. These par
enough to engage
of the latter and
exclude the light-
the passages q, as
tray is preferabl
partitions Q by e
ends of the pivo
notches q' in the
tions. One of th
chamber is prefe
tray to be remo
cleaning or fillin
Fig. 3, the front
its upper end to
passing the tray
ber, and this pan
glass pane q^2 to p
dition of the ch
the chicks drop
enter a drawer I
of the incubatin
removable throu
the chamber and
that the same m
For this purpose
$r\ r'$ of the drawe
ends, and a flex
across the centra
with the wall of
opening through
This curtain is su
a cross-bar r^3, wh
end walls of the
of incubation the
chamber its fulle
outer walls there
a vertical positio
the drawer lies a
chamber and the
with the front si
in full lines, Fig

of the solenoid-
nected with and
tric generator.
itable construc-
pose that shown
ed as follows: F
ade or arm which
ery twenty-four
itable construc-
motor, such as is
This switch-arm
h one pole of an
G of any suit-
metrically oppo-
re arranged two
connected with
id-magnet coils.
ls are connected
ectly connected
e electric gener-
witch-arm upon
g g alternately
s, whereby the
nately operative
urning the eggs

mber is arranged
es the tempera-
fficiently high to
resulting chicks
ans may be em-
cal energy into
e, I prefer a plu-
I', because the
for heating the
minator to pro-
ion for testing
described. As
or group of in-
is arranged in
w the egg-tray,
escent lamps I'
above the egg-
nged relatively
ray to produce
ture in all parts
n in Figs. 1, 2,
er group are ar-
of the incubat-
s I of the lower
ed on opposite
i, which is ar-
er part of the
site ends to the
amber. These
nite or suitably
desired. The
these lamps in-
h is arranged
pace communi-
s to control the
Various kinds
ed for this pur-
n in the draw-
ly, of a coil *j* of
f metal having
support, while its outer movable end carries an electric contact *j'*, which is engaged with and disengaged from a stationary contact j^2 of the circuit as the coil expands or contracts, due to the rise and fall of the temperature in the incubating-chamber. The stationary contact j^2 preferably consists of a screw which is accessible from the outside of the incubating-chamber and which upon being turned permits of varying the time of opening the lamp or heater circuit according to the degrees of temperature which it is desired to maintain in the incubator. In operation the thermostat closes the circuit and causes the lamps to be illuminated and generate heat, while if the temperature in the incubating-chamber rises above normal the thermostat opens the electric circuit and extinguishes the lamps, causing the temperature in the chamber to be reduced. After the temperature has again been reduced to normal the thermostat reëstablishes the electric circuit containing the lamps, whereby the latter are again lighted and generate heat.

It has been found in practice that the eggs require to be cooled off at intervals in order to produce proper incubation, and means have therefore been provided whereby this can be effected automatically. For this purpose the circuit of the heater-lamps is combined with the switch-arm F, and segmental contacts *k* k' k^2 are provided, with which said arm is adapted to engage. The lamp-contact *k* extends in the form of a semicircle from one magnet-contact *g* to the other, while the contacts k' k^2 are in the form of quadrants and extend toward each other from opposite sides of the magnet-contacts and are separated at their opposing ends by an insulating-section *l*. The several heater or lamp contacts *k* k' k^2 are electrically connected with each other and with one side of the lamps, and as the switch-arm F sweeps over the same the lamps are placed in circuit and illuminated. As the arm sweeps over the insulating-section the circuit of the lamps is broken and the latter are extinguished. The insulating-section is of such length that the lamps will remain extinguished a sufficient time to effect the required cooling of the eggs. As shown in Fig. 4, one or both groups of lamps may form part of the electric circuit of the magnets when the latter are operative.

In order to permit of testing the eggs while the same are in the incubator, means are provided whereby the light in the incubator below the eggs is caused to illuminate the same and permit inspection thereof. As shown in Figs. 1, 2, and 3, each of the egg-troughs is provided with a plurality of openings *m* in its lowermost part, over each of which except one an egg is located in the normal position of the tray. This causes the light from below the tray to shine upwardly through the eggs and permits of inspecting the quality of the eggs from above. By placing a glass pane M in the top of the chamber this inspection

can take place from the outside of the incubator, thereby avoiding the necessity of opening the incubator and cooling the eggs while inspecting the same. Furthermore, the eggs may thus be under continuous examination throughout the period of incubation, and poor eggs may be removed without handling those in good condition. For the purpose of intensifying the light below the eggs during inspection the upper group of lamps at this time is cut out and the circuit is concentrated upon the lower group of lamps, this being accomplished by means of a switch N. It is immaterial as to the particular manner in which the lamps are coupled with the electric generator and other parts of the apparatus for accomplishing this result. As shown in Fig. 4, each group of lamps is connected in parallel, and the corresponding ends of both groups are connected by a wire n with the movable contact j' of the thermostat, while the stationary contact j^2 of the latter is connected with the pole of the dynamo opposite to that with which the contact-arm F is connected. The opposite ends of the groups of lamps are provided with contacts o o', either of which can be engaged by the switch N, which is connected with the sectional contacts k k' k^2. When the incubator is in operation and the switch N is engaged with the contact o' of the upper group of lamps, as shown in full lines in Fig. 4, the current from the dynamo passes through both groups in series, and the upper and lower parts of the incubating-chamber are both heated and illuminated, but not at full candle-power. When it is desired to test the eggs, the switch N is disengaged from the contact o' of the upper group of lamps and engaged with the contact o of the lower group of lamps, as shown by dotted lines in Fig. 4. In this position of the switch the current of the dynamo only passes through the lower set of lamps, the resistance of the upper lamps being cut out of circuit, thereby illuminating the lower lamps more brilliantly than when both sets of lamps are in use. This increased brilliancy of the lower lamps increases the illumination of the eggs from the bottom and permits of more easily detecting any defective eggs in the tray. After inspection the switch is restored to its position for placing the upper set of lamps again in circuit for resuming the normal operation of the incubator. The illumination of the eggs for testing the same may be further increased by reflecting the light in the lower part of the incubating-chamber upwardly. This can be done by applying white paint to the interior of the incubating-chamber below the tray between the partitions Q or by placing reflectors i' underneath the lamps, as shown in Figs. 1 and 3. The interior of the chamber above the tray and the sides of the passages q are preferably painted black to prevent reflection of light above the eggs.

In order to prevent the glass in the top of the incubating-chamber from being broken and to confine the heat, a cover P is provided, which is placed over the glass after inspection. This cover is preferably hinged on one side to the top of the incubating-chamber, and the top in turn is hinged to one side of the chamber to afford access to the latter from above for placing eggs upon the tray or removing the same therefrom.

After the chicks are hatched out of the eggs they are housed in the lower part of the incubator, which latter serves as a brooder until the chicks are sufficiently advanced to permit of removing the same from the incubator. In order to enable the chicks to thus pass from the tray into the lower part of the incubator-chamber, the tray is separated from the adjacent walls of the incubator at one or both sides by an intervening space q, through which the chicks drop from the tray into the space below the same. To prevent the light of the lower set of lamps from passing upwardly through the spaces q and interfering with testing of the eggs, upright shutters or partitions Q are arranged lengthwise in the chamber on opposite sides of the egg-tray. These partitions extend upwardly far enough to engage the egg-tray in all positions of the latter and downwardly far enough to exclude the light-rays of the lower lamps from the passages q, as shown in Fig. 3. The egg-tray is preferably removably pivoted on the partitions Q by engaging or journaling the ends of the pivot-rod c^2 in bearing seats or notches q' in the upper edges of the partitions. One of the walls of the incubating-chamber is preferably movable to permit the tray to be removed from the chamber for cleaning or filling the same. As shown in Fig. 3, the front wall or panel a is hinged at its upper end to the chamber to permit of passing the tray into and out of the chamber, and this panel is also provided with a glass pane q^2 to permit of observing the condition of the chicks from the exterior. As the chicks drop through the passages q they enter a drawer R, arranged in the lower part of the incubating-chamber. This drawer is removable through an opening in the side of the chamber and is preferably constructed so that the same may be utilized as a brooder. For this purpose the inner and outer walls r r' of the drawer are hinged at their lower ends, and a flexible curtain r^2 is arranged across the central part of the drawer parallel with the wall of the chamber containing the opening through which the drawer passes. This curtain is supported at its upper end by a cross-bar r^3, which is mounted on the fixed end walls of the drawer. During the period of incubation the drawer is pushed into the chamber its fullest extent and the inner and outer walls thereof are turned upwardly into a vertical position, whereby the inner wall of the drawer lies against the rear side of the chamber and the front wall thereof is in line with the front side of the chamber, as shown in full lines, Fig. 3. In this position of the

drawer the chicks drop into the same from the tray. When all of the chicks have been hatched and delivered into the drawer, the latter is drawn outwardly until the curtain is in line with the front side of the chamber, after which the inner wall is turned downwardly into a horizontal position and the front wall is turned downwardly into an inclined position, as shown by dotted lines in Fig. 3. In this position of the parts the chicks can pass freely through the curtain into and out of the incubating-chamber and also down upon a feeding-ground, if desired, by connecting an inclined board or runway with the inclined front wall of the drawer. By keeping the front wall of the drawer raised after the same is withdrawn the chicks are confined within the drawer.

In order to prevent undue radiation of heat from the incubator, the side walls thereof other than the glass panels are covered with asbestos or other non-conducting covering r^4, or the walls may be made double to form an insulating air-space between the same in a well-known manner. Suitable air inlet and outlet openings *s s'* are also provided in the lower and upper parts of the incubating-chamber for maintaining the proper ventilation of the same.

If desired, the egg-tray may be rigidly supported within the incubating-chamber, which construction, however, necessitates turning the eggs manually. Such a construction is shown in Fig. 5, in which the tray B' is represented as mounted on horizontal cleats *t* on the inner sides of the chamber. When it is desired to turn the eggs, the tray is slid outwardly upon the cleats and through an opening in the side of the chamber, which opening is normally closed by the adjacent hinged wall of the chamber.

Instead of hinging the front and rear walls of the drawer the same may be fixed as shown in Fig. 7.

When no means are employed for automatically turning the eggs, the wiring of the electric circuits may be simplified, as shown in Fig. 8. In this construction the thermostat is interposed between one pole of the generator and one side of one set of lamps, and the switch is arranged to connect the opposite pole of the generator with the opposite side of either one or both sets of lamps. This figure also shows each group of lamps arranged in multiple and the two groups connected in series. In Fig. 9 the lamps of both groups are connected in series and the switch N' is so constructed that any number of the lamps may be cut out.

Instead of employing electric lamps as the means of heating the interior of the incubating-chamber, the same effect may be produced by using any other well-known means for developing heat electrically. For instance, as shown in Fig. 10, a group of lamps I^3 is employed in the lower part of the incubating-chamber, while a resistance-coil U or other electric heater is employed in the upper part of the incubating-chamber.

If desired, the thermostat may be arranged to open and close an electric circuit which includes only part of the heating device, while the other part of the heating device may be arranged in an electric circuit which is constantly closed. Such an organization is shown in Fig. 10, in which the resistance-coil is controlled by the thermostat and the lamps are constantly in circuit.

In Fig. 11 is shown an arrangement of wiring in which the circuits of the upper and lower sets of lamps I I' are separate, and these circuits contain separate thermostats J' J^2, whereby each set of lamps is controlled independent of the other set. This figure also shows a switch N^2 for cutting in or out more or less of the lamps which are connected in multiple in the upper set.

It will be observed that in the several constructions described the heating or illuminating devices and the thermostat for regulating the heat are all contained within the incubating-chamber. This permits of a more compact and sightly construction and enables the incubator to be shipped more easily than one in which the heating devices are arranged partly outside of the incubating-chamber. Furthermore, by arranging the electric heater directly in the incubating-chamber and opening or closing its circuit by a thermostat also arranged within the chamber no heat is wasted, as is the case in heaters containing dampers or valves, whereby the heat is diverted from the incubating-chamber into the atmosphere when the chamber is too warm.

I claim as my invention—

1. The combination of an incubating-chamber, a tray for supporting eggs comprising a plurality of parallel troughs each of which is provided in its bottom with a row of openings over which eggs are adapted to be placed, and electric lamps arranged in said chamber below said tray, substantially as set forth.

2. The combination of an incubating-chamber, a tray for supporting eggs comprising a plurality of parallel troughs each of which is provided in its bottom with a row of openings over which eggs are adapted to be placed, electric lamps arranged in said chamber below the tray, and a thermostat also arranged in said chamber and controlling the circuit of said lamps, substantially as set forth.

3. The combination of an incubating-chamber, a tray for supporting eggs arranged in the chamber, electric lamps arranged in said chamber above and below said tray, and a switch for controlling the circuit of the lamps above the tray, substantially as set forth.

4. The combination of an incubating-chamber, an egg-tray arranged in said chamber and provided with openings over which the eggs are adapted to be placed, electric lamps arranged in the chamber above and below said

tray, and a switch controlling the circuit of the lamps above the tray, substantially as set forth.

5. The combination of an incubating-chamber, an egg-tray arranged in said chamber and provided with openings over which the eggs are adapted to be placed, electric lamps arranged in the chamber above and below said tray, a thermostat arranged in said chamber and controlling the circuit of said lamps, and a manual switch controlling the circuit of the lamps, substantially as set forth.

6. The combination of an incubating-chamber provided in its top with a transparent pane, a horizontal egg-tray arranged in the chamber and provided with a plurality of openings over which eggs are adapted to be placed, electric lamps arranged in said chamber below said tray, and a switch for controlling said lamps, substantially as set forth.

7. The combination of an incubating-chamber, an egg-tray arranged in the chamber, electric lamps mounted on the walls of the chamber above the tray, a supporting-bar arranged centrally in the chamber below the tray, and electric lamps mounted on said bar, substantially as set forth.

8. The combination of an incubating-chamber, an egg-tray arranged in the chamber, electric lamps mounted on the walls of the chamber above the tray, a supporting-bar arranged centrally in the chamber below the tray and secured at its ends to the walls of the chamber, and electric lamps mounted on opposite sides of said bar, substantially as set forth.

9. The combination of an incubating-chamber, an egg-tray arranged in said chamber, an electric lamp arranged below the tray, and a reflector arranged below said lamp, substantially as set forth.

10. The combination of an incubating-chamber, an egg-tray arranged in said chamber provided with openings over which the eggs are placed, a bar arranged below the tray, electric lamps mounted on said bar, and a reflector arranged below the lamps and also mounted on said bar, substantially as set forth.

11. The combination of an incubating-chamber, an egg-tray arranged in said chamber and separated at its side from the wall of the chamber by an intervening passage, lamps arranged below the tray, and a partition or shutter extending downwardly from the side of the tray, substantially as set forth.

12. The combination of an incubating-chamber, an egg-tray arranged in said chamber and separated at opposite sides from the walls of the chamber, lamps arranged below the tray, and partitions extending from opposite sides of the tray downwardly below the lamps, substantially as set forth.

13. The combination of an incubating-chamber, an oscillating egg-tray arranged in said chamber and separated on opposite sides by intervening spa
of the chamber, u
arranged in the ch
of the tray and up
the tray is journa
the chamber belo
set forth.

14. The combi
chamber, an oscil
said chamber, and
ing device for op
tially as set forth.

15. The combi
chamber, an oscill
trally in said char
ing said tray con
having their arma
site ends of the tra

16. The combi
chamber, an oscill
trally in said char
ing said tray con
having their arma
site ends of the tr
ing an electric cu
the coils of said m
forth.

17. The combi
chamber provided
ent pane, an egg-t
ber and provided w
over which eggs
electric lamps arr
low said tray, and
chicks arranged
tray, substantially

18. The combi
chamber, an egg-t
ber, a drawer arr
adapted to be wi
ing in the wall of
arranged in the dr
containing said op
forth.

19. The combi
chamber provided
lower part of one
ranged in said cha
a drawer movable
provided with a l
adapted to close sa
arranged in the dr
containing said op
forth.

20. The combi
chamber provided
lower part of one
ranged in said cha
a drawer movable
provided with mov
and a curtain arra
lel with the wall
substantially as se

21. The combi
chamber, an egg-t
ber, an electric he

o the same from
chicks have been
the drawer, the
ntil the curtain is
of the chamber,
is turned down-
position and the
ardly into an in-
y dotted lines in
e parts the chicks
curtain into and
er and also down
desired, by con-
runway with the
awer. By keep-
awer raised after
chicks are con-

radiation of heat
de walls thereof
are covered with
ting covering r^4,
ouble to form an
n the same in a
ble air inlet and
provided in the
the incubating-
e proper ventila-

y be rigidly sup-
-chamber, which
ssitates turning
construction is
e tray B′ is rep-
zontal cleats t on
ber. When it is
tray is slid out-
hrough an open-
ber, which open-
adjacent hinged

nt and rear walls
be fixed as shown

loyed for auto-
he wiring of the
lified, as shown
ion the thermo-
one pole of the
ne set of lamps,
connect the op-
with the oppo-
h sets of lamps.
group of lamps
the two groups
9 the lamps of
n series and the
hat any number

ric lamps as the
r of the incubat-
ct may be pro-
ell-known means
ically. For in-
a group of lamps
part of the incu-

bating-chamber, while a resistance-coil U or other electric heater is employed in the upper part of the incubating-chamber.

If desired, the thermostat may be arranged to open and close an electric circuit which includes only part of the heating device, while the other part of the heating device may be arranged in an electric circuit which is constantly closed. Such an organization is shown in Fig. 10, in which the resistance-coil is controlled by the thermostat and the lamps are constantly in circuit.

In Fig. 11 is shown an arrangement of wiring in which the circuits of the upper and lower sets of lamps I I′ are separate, and these circuits contain separate thermostats J′ J^2, whereby each set of lamps is controlled independent of the other set. This figure also shows a switch N^2 for cutting in or out more or less of the lamps which are connected in multiple in the upper set.

It will be observed that in the several constructions described the heating or illuminating devices and the thermostat for regulating the heat are all contained within the incubating-chamber. This permits of a more compact and sightly construction and enables the incubator to be shipped more easily than one in which the heating devices are arranged partly outside of the incubating-chamber. Furthermore, by arranging the electric heater directly in the incubating-chamber and opening or closing its circuit by a thermostat also arranged within the chamber no heat is wasted, as is the case in heaters containing dampers or valves, whereby the heat is diverted from the incubating-chamber into the atmosphere when the chamber is too warm.

I claim as my invention—

1. The combination of an incubating-chamber, a tray for supporting eggs comprising a plurality of parallel troughs each of which is provided in its bottom with a row of openings over which eggs are adapted to be placed, and electric lamps arranged in said chamber below said tray, substantially as set forth.

2. The combination of an incubating-chamber, a tray for supporting eggs comprising a plurality of parallel troughs each of which is provided in its bottom with a row of openings over which eggs are adapted to be placed, electric lamps arranged in said chamber below the tray, and a thermostat also arranged in said chamber and controlling the circuit of said lamps, substantially as set forth.

3. The combination of an incubating-chamber, a tray for supporting eggs arranged in the chamber, electric lamps arranged in said chamber above and below said tray, and a switch for controlling the circuit of the lamps above the tray, substantially as set forth.

4. The combination of an incubating-chamber, an egg-tray arranged in said chamber and provided with openings over which the eggs are adapted to be placed, electric lamps arranged in the chamber above and below said

tray, and a switch controlling the circuit of the lamps above the tray, substantially as set forth.

5. The combination of an incubating-chamber, an egg-tray arranged in said chamber and provided with openings over which the eggs are adapted to be placed, electric lamps arranged in the chamber above and below said tray, a thermostat arranged in said chamber and controlling the circuit of said lamps, and a manual switch controlling the circuit of the lamps, substantially as set forth.

6. The combination of an incubating-chamber provided in its top with a transparent pane, a horizontal egg-tray arranged in the chamber and provided with a plurality of openings over which eggs are adapted to be placed, electric lamps arranged in said chamber below said tray, and a switch for controlling said lamps, substantially as set forth.

7. The combination of an incubating-chamber, an egg-tray arranged in the chamber, electric lamps mounted on the walls of the chamber above the tray, a supporting-bar arranged centrally in the chamber below the tray, and electric lamps mounted on said bar, substantially as set forth.

8. The combination of an incubating-chamber, an egg-tray arranged in the chamber, electric lamps mounted on the walls of the chamber above the tray, a supporting-bar arranged centrally in the chamber below the tray and secured at its ends to the walls of the chamber, and electric lamps mounted on opposite sides of said bar, substantially as set forth.

9. The combination of an incubating-chamber, an egg-tray arranged in said chamber, an electric lamp arranged below the tray, and a reflector arranged below said lamp, substantially as set forth.

10. The combination of an incubating-chamber, an egg-tray arranged in said chamber provided with openings over which the eggs are placed, a bar arranged below the tray, electric lamps mounted on said bar, and a reflector arranged below the lamps and also mounted on said bar, substantially as set forth.

11. The combination of an incubating-chamber, an egg-tray arranged in said chamber and separated at its side from the wall of the chamber by an intervening passage, lamps arranged below the tray, and a partition or shutter extending downwardly from the side of the tray, substantially as set forth.

12. The combination of an incubating-chamber, an egg-tray arranged in said chamber and separated at opposite sides from the walls of the chamber, lamps arranged below the tray, and partitions extending from opposite sides of the tray downwardly below the lamps, substantially as set forth.

13. The combination of an incubating-chamber, an oscillating egg-tray arranged in said chamber and separated on opposite sides by intervening spaces from the adjacent walls of the chamber, upright partitions which are arranged in the chamber adjacent to the sides of the tray and upon the upper ends of which the tray is journaled, and lamps arranged in the chamber below the tray, substantially as set forth.

14. The combination of an incubating-chamber, an oscillating egg-tray arranged in said chamber, and an electromagnetic shifting device for operating said tray, substantially as set forth.

15. The combination of an incubating-chamber, an oscillating egg-tray pivoted centrally in said chamber, and means for shifting said tray consisting of electromagnets having their armatures connected with opposite ends of the tray, substantially as set forth.

16. The combination of an incubating-chamber, an oscillating egg-tray pivoted centrally in said chamber, and means for shifting said tray consisting of electromagnets having their armatures connected with opposite ends of the tray and a switch for directing an electric current alternately through the coils of said magnets, substantially as set forth.

17. The combination of an incubating-chamber provided in its top with a transparent pane, an egg-tray arranged in the chamber and provided with a plurality of openings over which eggs are adapted to be placed, electric lamps arranged in said chamber below said tray, and a drawer for receiving the chicks arranged in the chamber below the tray, substantially as set forth.

18. The combination of an incubating-chamber, an egg-tray arranged in said chamber, a drawer arranged below the tray and adapted to be withdrawn through an opening in the wall of the chamber, and a curtain arranged in the drawer parallel to said wall containing said opening, substantially as set forth.

19. The combination of an incubating-chamber provided with an opening in the lower part of one of its walls, an egg-tray arranged in said chamber above said opening, a drawer movable through said opening and provided with a hinged front wall which is adapted to close said opening, and a curtain arranged in the drawer parallel with the wall containing said opening, substantially as set forth.

20. The combination of an incubating-chamber provided with an opening in the lower part of one of its walls, an egg-tray arranged in said chamber above said opening, a drawer movable through said opening and provided with movable front and rear walls, and a curtain arranged in said drawer parallel with the wall containing said opening, substantially as set forth.

21. The combination of an incubating-chamber, an egg-tray arranged in said chamber, an electric heater for said chamber, and

automatic means for periodically breaking the circuit of said heater, substantially as set forth.

22. The combination of an incubating-chamber, an egg-tray arranged in said chamber, an electric heater for said chamber, a thermostat arranged in said chamber and controlling the circuit of said heater, and automatic means for periodically breaking the circuit of said heater, substantially as set forth.

23. The combination of an incubating-chamber, an oscillating egg-tray arranged in said chamber, electromagnets for shifting said tray having their armatures connected with opposite ends of the tray, an electric heater arranged in said chamber, an electric generator having one pole connected with one side of the heater and the coils of said magnets, contacts connected with the opposite side of the heater and the magnet-coils, and a movable switch member connected with the other pole of the generator and adapted to engage successively with said magnet and heater contacts, substantially as set forth.

24. The combination of an incubating-chamber, an oscillating egg-tray arranged in said chamber, electromagnets for shifting said tray having their armatures connected with opposite ends of the tray, an electric heater arranged in said chamber and connected on one side with one end of said magnet-coils, a thermostat arranged in said chamber and interposed between one pole of an electric generator and said heater, a rotary contact-arm connected with the other pole of said generator, a pair of magnet-contacts arranged on opposite sides of said contact-arm and connected respectively with the opposite ends of said magnet-coils, segmental contacts arranged around said magnet-contacts and alternating with the same and connected with that side of the heater opposite the thermostat, and an insulating-section arranged between two adjacent contacts, said contact-arm being adapted to successively engage said contacts and insulating-section during its rotary movement, substantially as set forth.

Witness my hand this 25th day of July, 1903.

FRANK CLINTON PERKINS.

Witnesses:
THEO. L. POPP,
EMMA M. GRAHAM.

824 (Defendants' Exhibit P, Letters Patent
G. H. Boyd, August 7, 1906.)

odically breaking
substantially as

f an incubating-
ged in said cham-
said chamber, a
chamber and con-
heater, and auto-
ally breaking the
bstantially as set

f an incubating-
g-tray arranged in
nets for shifting
atures connected
tray, an electric
amber, an electric
onnected with one
coils of said mag-
with the opposite
magnet-coils, and
connected with the
r and adapted to
said magnet and
lly as set forth.

f an incubating-
g-tray arranged in
ts for shifting said

tray having their armatures connected with opposite ends of the tray, an electric heater arranged in said chamber and connected on one side with one end of said magnet-coils, a thermostat arranged in said chamber and interposed between one pole of an electric generator and said heater, a rotary contact-arm connected with the other pole of said generator, a pair of magnet-contacts arranged on opposite sides of said contact-arm and connected respectively with the opposite ends of said magnet-coils, segmental contacts arranged around said magnet-contacts and alternating with the same and connected with that side of the heater opposite the thermostat, and an insulating-section arranged between two adjacent contacts, said contact-arm being adapted to successively engage said contacts and insulating-section during its rotary movement, substantially as set forth.

Witness my hand this 25th day of July, 1903.

FRANK CLINTON PERKINS.

Witnesses:
THEO. L. POPP,
EMMA M. GRAHAM.

824 (Defendants' Exhibit P, Letters Patent No. 828,181 to G. H. Boyd, August 7, 1906.)

678 No. 828,181. PATENTED AUG. 7, 1906.

G. H. BOYD.

INCUBATOR.

APPLICATION FILED OCT. 31, 1905.

2 SHEETS—SHEET 1.

Fig. 1.

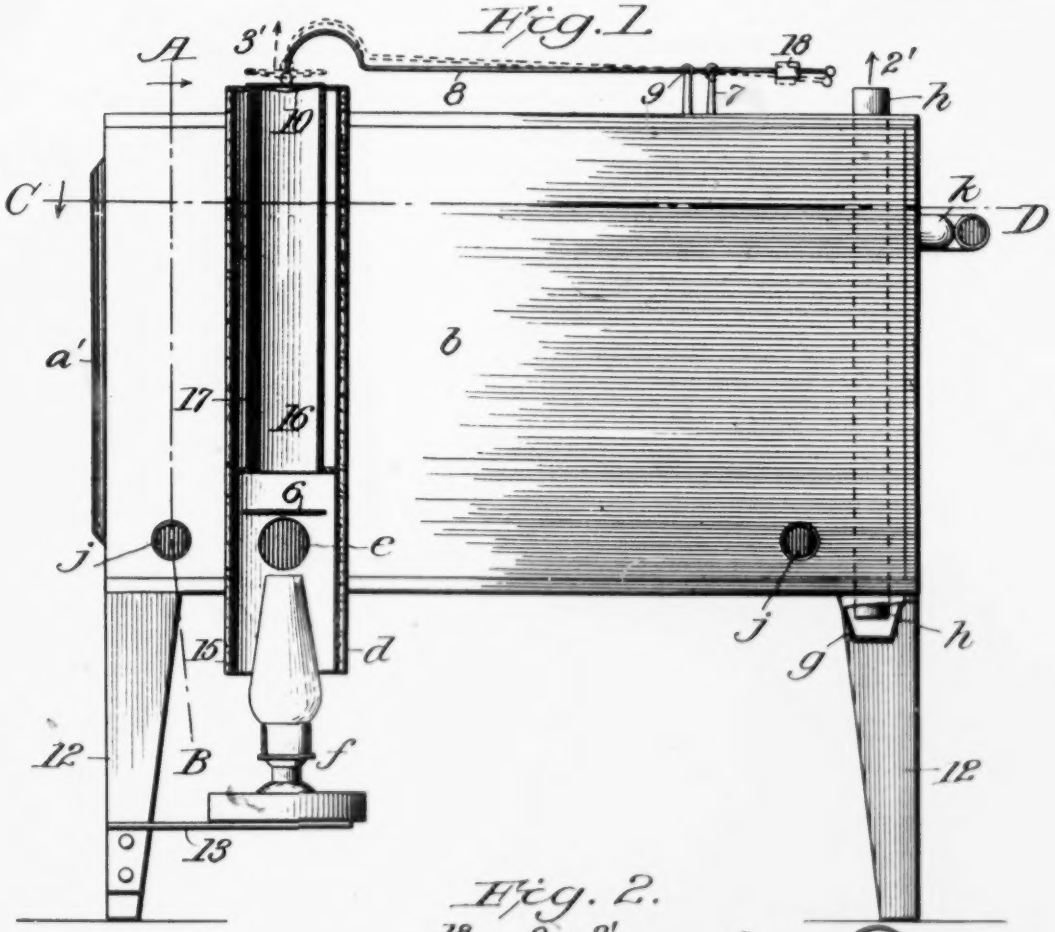

Fig. 2.

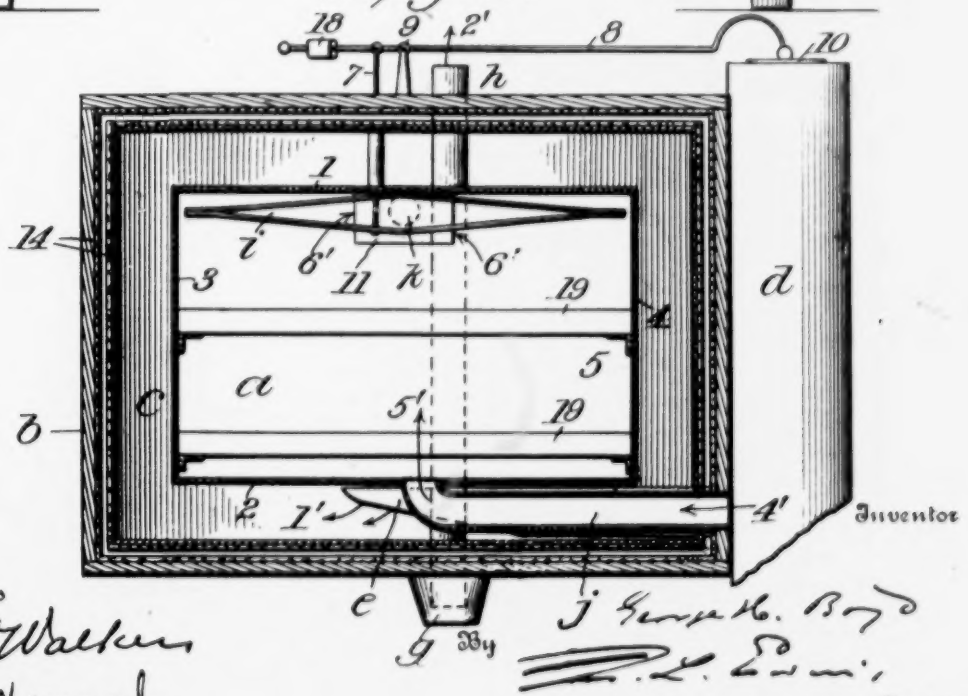

Witnesses

C. H. Walker

A. M. E. Kennedy

Inventor

By

Attorney

680 No. 828,181. PATENTED AUG. 7, 1906.

G. H. BOYD.

INCUBATOR.

APPLICATION FILED OCT. 31, 1905.

2 SHEETS—SHEET 2.

Fig. 3.

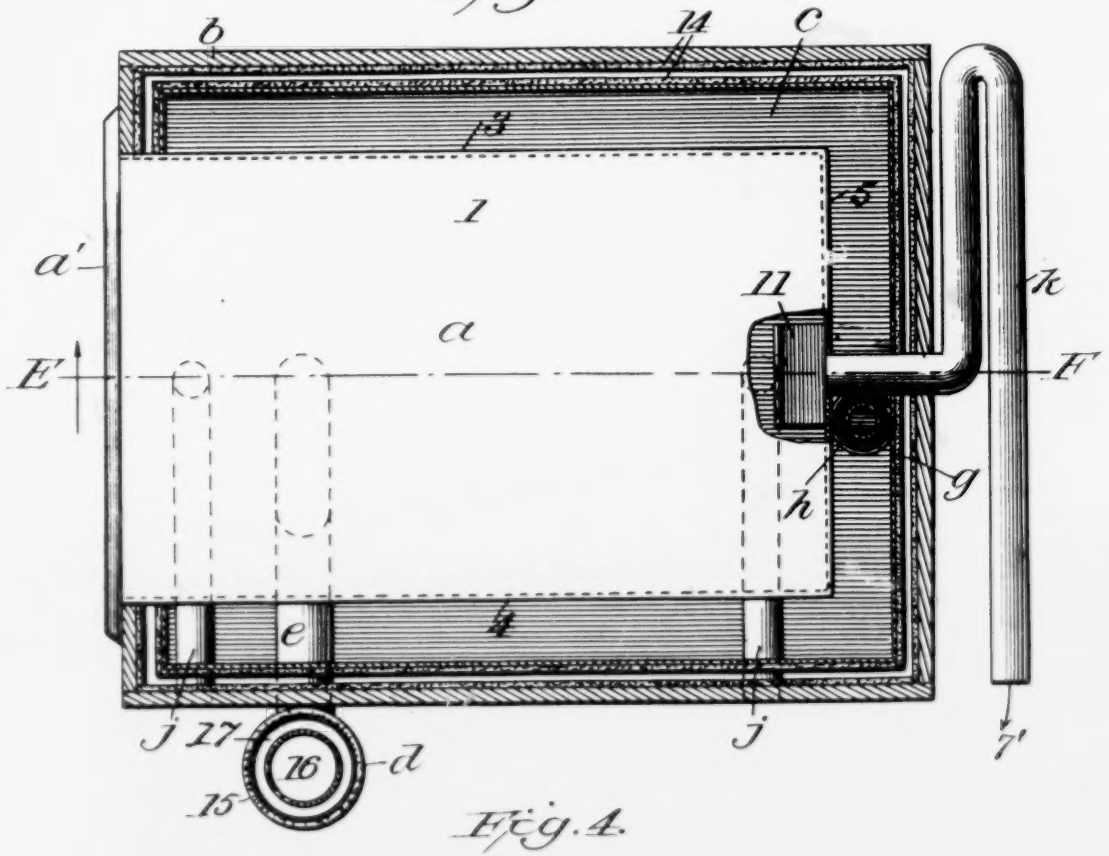

Fig. 4.

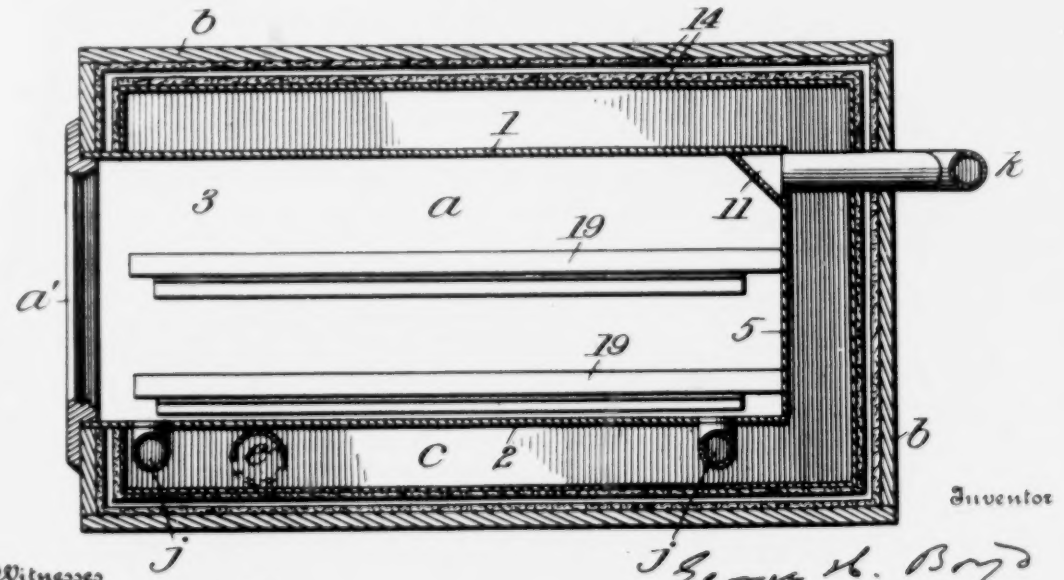

Witnesses

C. M. Walker.

A. M. E. Kennedy.

Inventor

Geo. H. Boyd

By

Attorney

UNITED STATES PATENT

GEORGE H. BOYD, OF WASHINGTON, DISTRICT

INCUBATOR.

No. 828,181. Specification of Letters Patent.

Application filed October 31, 1905. Serial No. 285,296.

To all whom it may concern:

Be it known that I, GEORGE H. BOYD, a citizen of the United States of America, and a resident of the city of Washington, in the District of Columbia, have invented a new and useful Improvement in Incubators, of which the following is a specification.

This invention relates, preferably, to lamp-heated incubators; and it consists in certain novel combinations of parts hereinafter set forth and claimed.

The leading object of the present invention is to freely discharge the foul air charged with carbon dioxid from the egg-chamber in such a way as to reduce to any desired extent the draft through the egg-chamber and at the same time to utilize the tendency of the heated air to escape at the top of the chamber and also to provide for keeping the egg-chamber supplied with heated fresh air.

Another object of the invention is to wholly dispense with regulating-slides and the like, so that there shall be at all times an abundant uniform supply of fresh air within the egg-chamber and a free escape of foul air therefrom.

Another object is to equalize the distribution of heat within the incubator, so that the temperature of the egg-chamber shall be uniform throughout.

Another object of the invention is to simplify the construction of the incubator to the utmost and at the same time to adapt the same for use in any convenient room.

Figure 1 represents a side view, partly in section. Fig. 2 represents a substantially vertical section on the line A B, Fig. 1. Fig. 3 represents a horizontal section on the line C D, Fig. 1; and Fig. 4 represents a vertical section on the line E F, Fig. 3.

Like reference characters indicate like parts in all the figures.

In the improved incubator a rectangular egg-chamber *a* is provided with a double glass door *a'* at one side, and its other five sides 1, 2, 3, 4, and 5 are of sheet metal and surrounded by an outer casing *b* and by a hot-air space *c* between the egg-chamber and said casing.

A vertical open-ended flue *d* is located outside of the casing *b* and connected with the air-space *c* by a horizontal tube *e*, opening into said flue at a point above its lower end and beneath a baffle-plate 6, as shown in Fig. 1, and into the bottom of said space beneath the egg-chamber, as shown in Figs. 2 and 4. Beneath said flue *d* ported, as represen from said lamp ent represented by arr rally rises within sa freely around the air within the spa into a well *g* at the escaping therefrom end of a vertical above the top of th ed by the arrows 2'. of the lower part o as its upper part, is provision is made the egg-chamber which it has hereto complish.

A thermostat *i*, this invention may proved constructio egg-chamber *a* at link 7 with a substa having a fulcrum 9 bator and pivotally to a damper 10, b *d* is normally closed lines in Fig. 1. W egg-chamber *a* bec excessive, the therm nections opens said ed in dotted lines in the lamp *f* is permit ward, as represente 1, so as not to enter to more quickly re the egg-chamber to admission of heat to to continue, and the is regulated.

Fresh air is admit at bottom through tubes *j*, of thin meta extending through shown in Figs. 1, 2, a ing upward throug chamber, as shown i arrows 4' and 5'.) maintained at the te space *c*, and the fresh *a* is heated to a suf therethrough, so as t the eggs by the admi

The foul air escap egg-chamber *a*, as re 6' and 7' in Figs. 2 a

PATENTED AUG. 7, 1906.

G. H. BOYD.

INCUBATOR.

APPLICATION FILED OCT. 31, 1905.

2 SHEETS—SHEET 2.

Fig. 3.

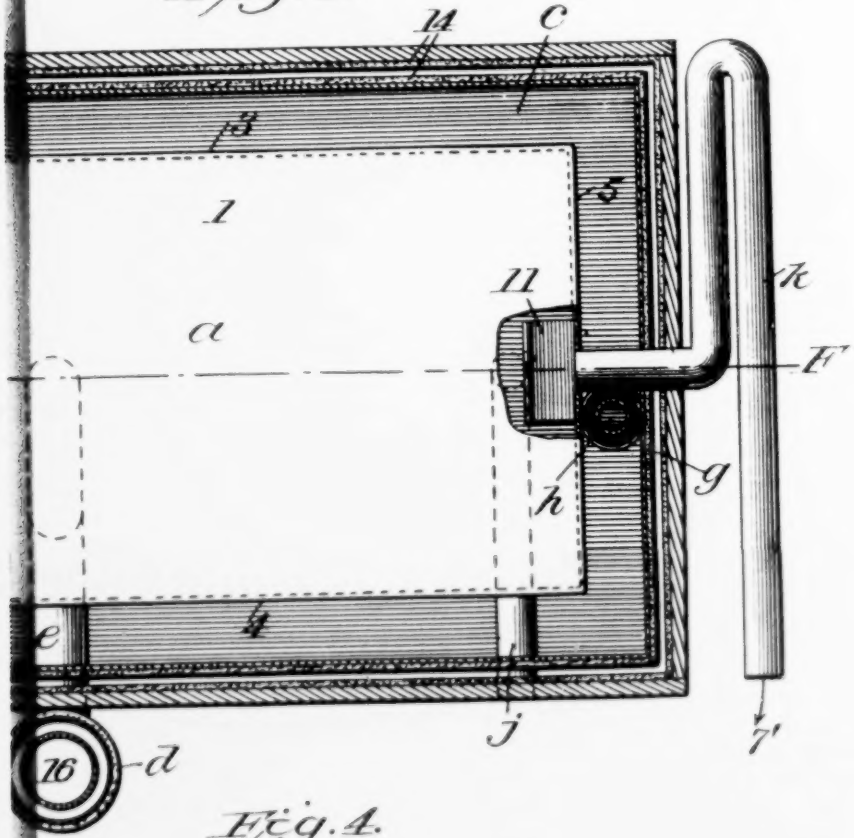

Fig. 4.

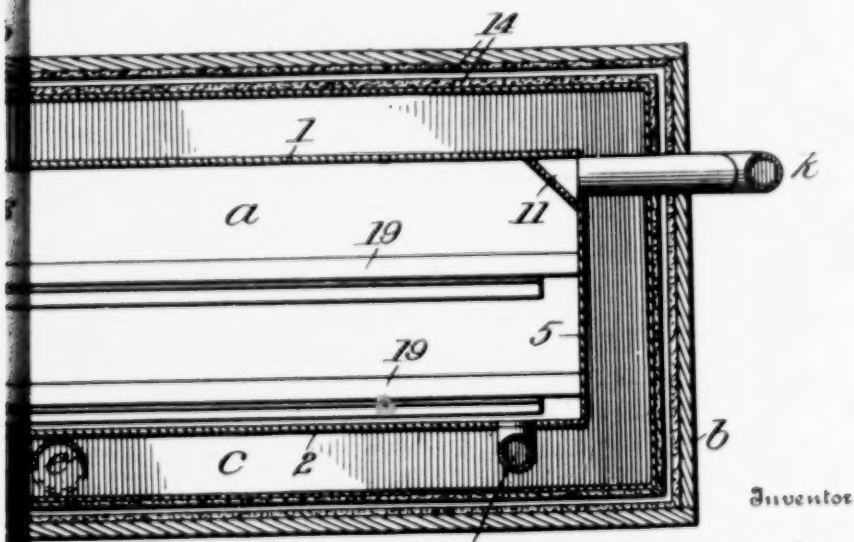

Inventor

George H. Boyd

By

Attorney

UNITED STATES PATENT OFFICE

GEORGE H. BOYD, OF WASHINGTON, DISTRICT OF COLUMBIA.

INCUBATOR.

No. 828,181. Specification of Letters Patent. Patented Aug. 7, 1906.

Application filed October 31, 1905. Serial No. 285,296.

To all whom it may concern:

Be it known that I, GEORGE H. BOYD, a citizen of the United States of America, and a resident of the city of Washington, in the District of Columbia, have invented a new and useful Improvement in Incubators, of which the following is a specification.

This invention relates, preferably, to lamp-heated incubators; and it consists in certain novel combinations of parts hereinafter set forth and claimed.

The leading object of the present invention is to freely discharge the foul air charged with carbon dioxid from the egg-chamber in such a way as to reduce to any desired extent the draft through the egg-chamber and at the same time to utilize the tendency of the heated air to escape at the top of the chamber and also to provide for keeping the egg-chamber supplied with heated fresh air.

Another object of the invention is to wholly dispense with regulating-slides and the like, so that there shall be at all times an abundant uniform supply of fresh air within the egg-chamber and a free escape of foul air therefrom.

Another object is to equalize the distribution of heat within the incubator, so that the temperature of the egg-chamber shall be uniform throughout.

Another object of the invention is to simplify the construction of the incubator to the utmost and at the same time to adapt the same for use in any convenient room.

Figure 1 represents a side view, partly in section. Fig. 2 represents a substantially vertical section on the line A B, Fig. 1. Fig. 3 represents a horizontal section on the line C D, Fig. 1; and Fig. 4 represents a vertical section on the line E F, Fig. 3.

Like reference characters indicate like parts in all the figures.

In the improved incubator a rectangular egg-chamber *a* is provided with a double glass door *a'* at one side, and its other five sides 1, 2, 3, 4, and 5 are of sheet metal and surrounded by an outer casing *b* and by a hot-air space *c* between the egg-chamber and said casing.

A vertical open-ended flue *d* is located outside of the casing *b* and connected with the air-space *c* by a horizontal tube *e*, opening into said flue at a point above its lower end and beneath a baffle-plate 6, as shown in Fig. 1, and into the bottom of said space beneath the egg-chamber, as shown in Figs. 2 and 4. Beneath said flue *d* a suitable lamp *f* is supported, as represented in Fig. 1, and the heat from said lamp enters said hot-air space *c*, as represented by arrows 1' in Fig. 2. It naturally rises within said air-space and circulates freely around the egg-chamber, the cooler air within the space descending by gravity into a well *g* at the bottom of the casing and escaping therefrom through the open lower end of a vertical pipe *h*, which discharges above the top of the incubator, as represented by the arrows 2'. In this way the heating of the lower part of the egg-chamber, as well as its upper part, is insured, or, in other words provision is made for rendering the heat of the egg-chamber uniform at all heights, which it has heretofore been difficult to accomplish.

A thermostat *i*, which for the purposes of this invention may be of any known or improved construction, is located within the egg-chamber *a* at top and connected by a link 7 with a substantially horizontal lever 8, having a fulcrum 9 upon the top of the incubator and pivotally attached at its long end to a damper 10, by which the top of the flue *d* is normally closed, as in Fig. 2 and in full lines in Fig. 1. When the heat within the egg-chamber *a* becomes to the least degree excessive, the thermostat *i* through said connections opens said damper 10, as represented in dotted lines in Fig. 1, and the heat from the lamp *f* is permitted to escape directly upward, as represented by the arrow 3' in Fig. 1, so as not to enter the air-space *c*, and thus to more quickly reduce the temperature of the egg-chamber to normal than when the admission of heat to the air-space is permitted to continue, and the escape of air therefrom is regulated.

Fresh air is admitted to the egg-chamber *a* at bottom through substantially horizontal tubes *j*, of thin metal, having open inlet ends extending through the outer casing *b*, as shown in Figs. 1, 2, and 3, and inner ends opening upward through the floor of the egg-chamber, as shown in Figs. 2 and 4. (See the arrows 4' and 5'.) Such air-inlet tubes are maintained at the temperature of the hot-air space *c*, and the fresh air for the egg-chamber *a* is heated to a sufficient extent in passing therethrough, so as to prevent any chilling of the eggs by the admission of fresh air.

The foul air escapes from the top of the egg-chamber *a*, as represented by the arrows 6' and 7' in Figs. 2 and 3, preferably at its in-

682

ner or rear end, through a thin metal tube *k*, which may be of suitable sheet metal and open-ended and is extended in a substantially horizontal plane outside the outer casing *b* and remote from the heat-flue *d*, as shown in Figs. 1, 3, and 4, so as to be maintained at the temperature of the room in which the incubator is located, and thus adapted to reduce the escaping foul air to substantially the same temperature as the air of such room in its passage therethrough and to prevent excessive draft within the egg-chamber. The foul air carries off with it the carbon dioxid thrown off by the eggs, and the atmosphere of the egg-chamber *a* is thus kept pure. A baffle-plate 11, forming an open-ended space at the inner end of the foul-air tube *k*, assists to prevent a direct draft toward said inner end, and thus insures a more perfect circulation of air within the egg-chamber *a*. The air-inlet tube *j* and the foul-air tube *k* are preferably of one and the same diameter, and the employment of a plurality of the former thus insures an abundant supply of oxygen within the egg-chamber and also provides for the admission of the air at the respective ends of the egg-trays or their equivalent and its uniform distribution throughout the egg-chamber.

The body of the incubator may be supported at a convenient height by legs 12 or their equivalent, which may in turn be provided with any suitable lamp-support 13. The outer casing *b* is preferably made with hollow walls, externally of wood and internally of sheet metal, and with asbestos linings 14 within the air-spaces. The external heat-flue *d* is also preferably provided with an asbestos jacket 15 to economize the heat, and its upper part is preferably contracted by an inner tube 16, surrounded by an air-space 17, the latter being closed at top and bottom, while said inner tube 16 is open-ended and forms the upward extension of the interior of the flue.

The operation of the thermostat *i* and its connections is or may be regulated by a sliding weight 18 or in any known or improved manner. Otherwise no regulation of the incubator is required, and it is adapted to take care of itself within any ordinary room.

The egg-supports 19 within the egg-chamber *a* may be of any known or improved construction, and other like modifications will suggest themselves to those skilled in the art.

Having thus described said improvement, I claim as my invention and desire to patent under this specification—

1. The combination, in an incubator, of an egg-chamber, means for heating the same, means for admitting fresh air to said chamber, and means for the escape of foul air therefrom, the foul-air escape consisting of an open-ended and unobstructed tube of thin metal in direct communication with the upper part of the egg-chamber extended outside of the incubator and exposed to the air within the room in which the incubator is located, whereby the foul air is permitted to escape freely and is reduced in temperature before its escape from said tube.

2. The combination, in an incubator, of an egg-chamber, means for heating the same, means for admitting fresh air to said egg-chamber at bottom, and means for the escape of the foul air charged with carbon dioxid from the upper part of the egg-chamber, the foul-air outlet consisting of an open-ended and unobstructed tube of thin metal in direct communication with the upper part of the egg-chamber at the inner end and extended outside the incubator in a substantially horizontal direction to a sufficient extent to reduce the temperature of the escaping foul air before its escape from said tube and thus to prevent excessive draft within the egg-chamber.

3. The combination, in an incubator, of a non-conducting outer casing, egg-chamber walls of sheet metal within said outer casing, a hot-air space being formed between said sheet-metal walls and said outer casing, a suitable egg-chamber door, a vertical heat-flue external to said outer casing, a horizontal tube connecting said heat-flue with said hot-air space, a well in the outer casing, and an outlet-pipe extending upwardly from within said well through the top of the incubator, substantially as hereinbefore specified.

GEO. H. BOYD.

Witnesses:
JAS. L. EWIN,
A. M. SPOFFORD.

830 (Defendants' Exhibit P, Letters Patent No. L. Verna, June 16, 1908.)

nd, through a thin metal tube *k*, be of suitable sheet metal and and is extended in a substantntal plane outside the outer casemote from the heat-flue *d*, as gs. 1, 3, and 4, so as to be mainhe temperature of the room in incubator is located, and thus reduce the escaping foul air to y the same temperature as the room in its passage therethrough vent excessive draft within the r. The foul air carries off with n dioxid thrown off by the eggs, nosphere of the egg-chamber *a* is ure. A baffle-plate 11, forming ded space at the inner end of the e *k*, assists to prevent a direct d said inner end, and thus insures fect circulation of air within the r *a*. The air-inlet tube *j* and the e *k* are preferably of one and the ter, and the employment of a plufermer thus insures an abundant oxygen within the egg-chamber ovides for the admission of the air ective ends of the egg-trays or alent and its uniform distribution the egg-chamber.

y of the incubator may be supconvenient height by legs 12 or alent, which may in turn be pro any suitable lamp-support 13. casing *b* is preferably made with s, externally of wood and interet metal, and with asbestos linhin the air-spaces. The external is also preferably provided with jacket 15 to economize the heat, per part is preferably contracted r tube 16, surrounded by an airhe latter being closed at top and hile said inner tube 16 is openforms the upward extension of the the flue.

ration of the thermostat *i* and its s is or may be regulated by a slid- 18 or in any known or improved Otherwise no regulation of the inrequired, and it is adapted to take lf within any ordinary room.

-supports 19 within the egg-chamber *a* may be of any known or improved construction, and other like modifications will suggest themselves to those skilled in the art.

Having thus described said improvement, I claim as my invention and desire to patent under this specification—

1. The combination, in an incubator, of an egg-chamber, means for heating the same, means for admitting fresh air to said chamber, and means for the escape of foul air therefrom, the foul-air escape consisting of an open-ended and unobstructed tube of thin metal in direct communication with the upper part of the egg-chamber extended outside of the incubator and exposed to the air within the room in which the incubator is located, whereby the foul air is permitted to escape freely and is reduced in temperature before its escape from said tube.

2. The combination, in an incubator, of an egg-chamber, means for heating the same, means for admitting fresh air to said egg-chamber at bottom, and means for the escape of the foul air charged with carbon dioxid from the upper part of the egg-chamber, the foul-air outlet consisting of an open-ended and unobstructed tube of thin metal in direct communication with the upper part of the egg-chamber at the inner end and extended outside the incubator in a substantially horizontal direction to a sufficient extent to reduce the temperature of the escaping foul air before its escape from said tube and thus to prevent excessive draft within the egg-chamber.

3. The combination, in an incubator, of a non-conducting outer casing, egg-chamber walls of sheet metal within said outer casing, a hot-air space being formed between said sheet-metal walls and said outer casing, a suitable egg-chamber door, a vertical heat-flue external to said outer casing, a horizontal tube connecting said heat-flue with said hot-air space, a well in the outer casing, and an outlet-pipe extending upwardly from within said well through the top of the incubator, substantially as hereinbefore specified.

GEO. H. BOYD.

Witnesses:
JAS. L. EWIN,
A. M. SPOFFORD.

830 (Defendants' Exhibit P, Letters Patent No. 891,019 to L. Verna, June 16, 1908.)

No. 891,019. PATENTED JUNE 16, 1908.

L. VERNA.

DRYING ROOM.

APPLICATION FILED OCT. 22, 1907.

2 SHEETS—SHEET 1.

FIG. 1.

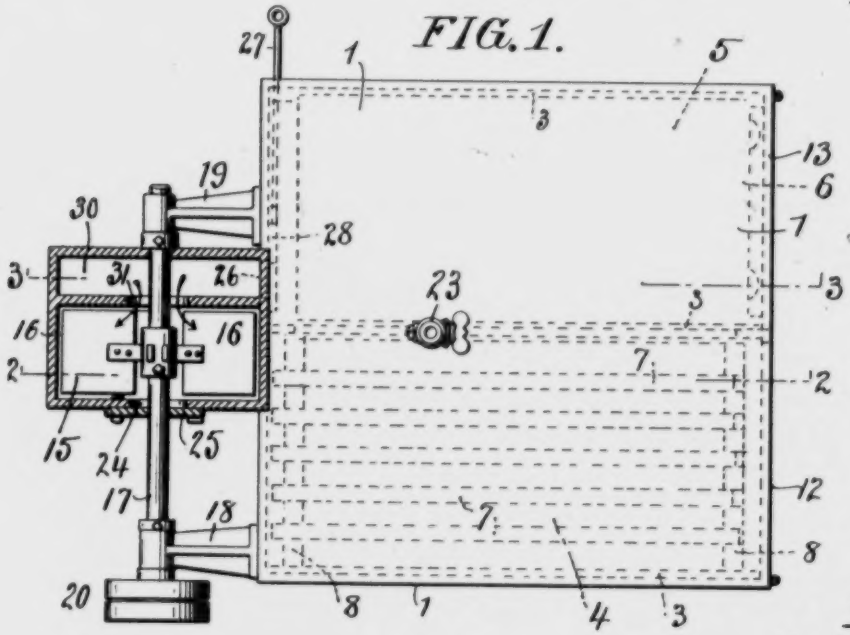

FIG. 6.

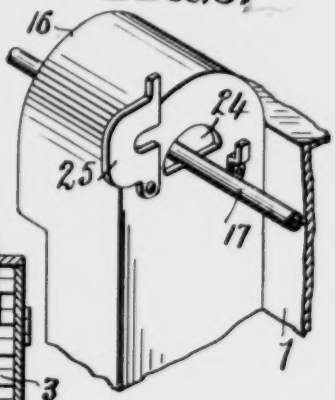

FIG. 2.

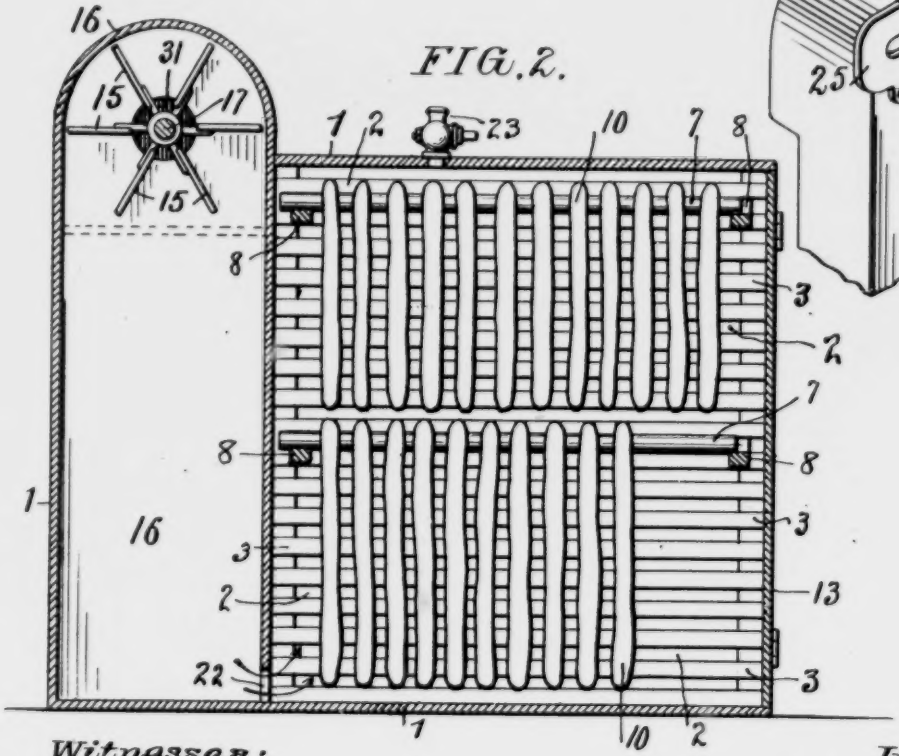

Witnesses:
N. R. Cleland
Hugh McCleary, Jr.

Inventor:
Luigi Verna
By his Attorney
F. DeWitt Goodwin

686 No. 891,019. PATENTED JUNE 16, 1908.

L. VERNA.

DRYING ROOM.

APPLICATION FILED OCT. 22, 1907.

2 SHEETS—SHEET 2.

FIG. 3.

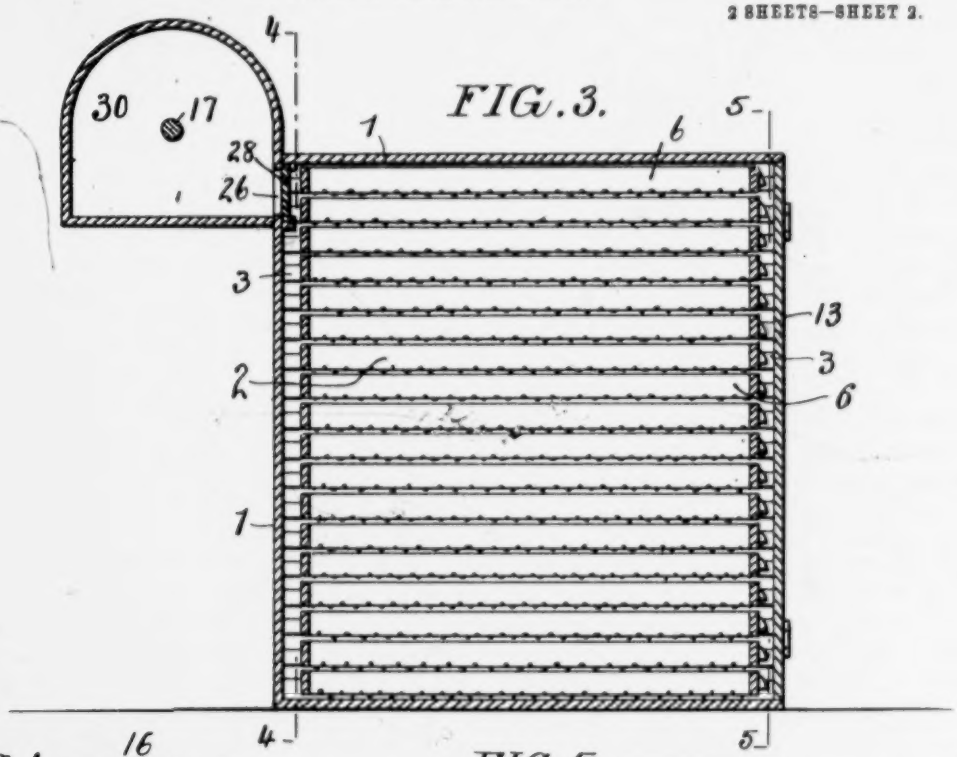

FIG. 4.

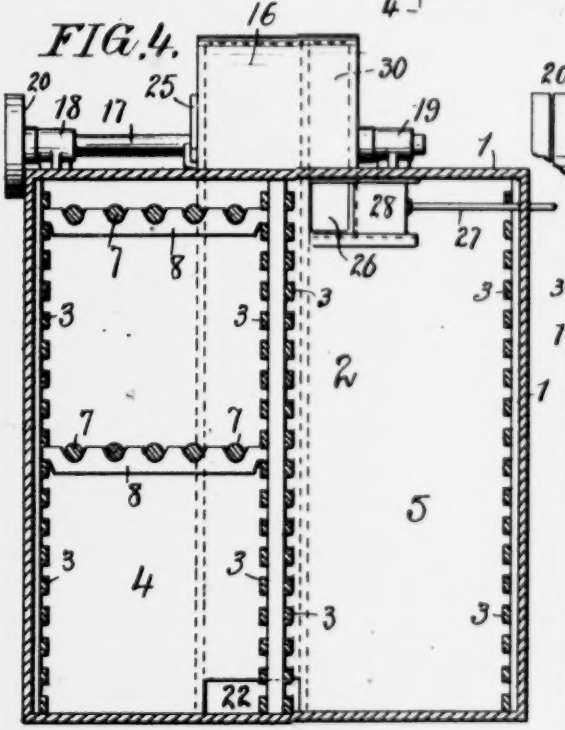

FIG. 5.

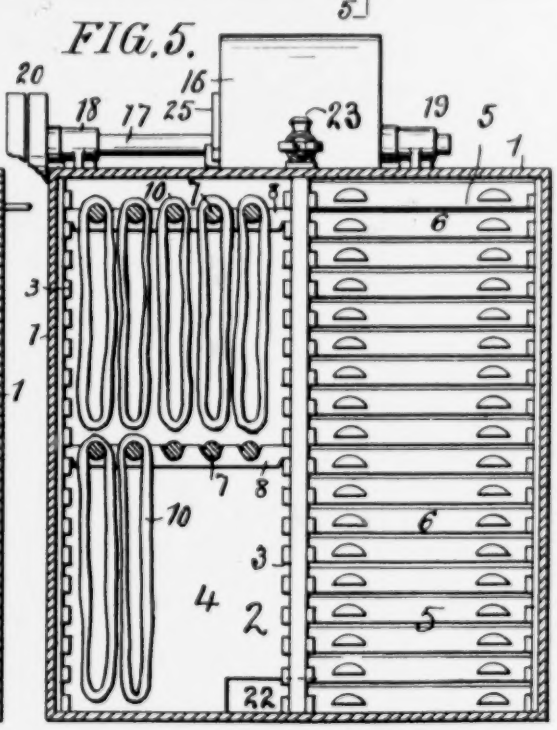

Witnesses:
M. R. Cleveland
Hugh McAnany, Jr.

Inventor:
Luigi Verna
By his Attorney
F. DeWitt Goodwin

UNITED STATES PATENT

LUIGI VERNA, OF PHILADELPHIA, PENNSYLVA

DRYING-ROOM.

No. 891,019. Specification of Letters Patent. P

Application filed October 22, 1907. Serial No. 398,611.

To all whom it may concern:

Be it known that I, LUIGI VERNA, a citizen of the United States, residing at Philadelphia, in the county of Philadelphia and State of Pennsylvania, have invented certain new and useful Improvements in Drying-Rooms, of which the following is a specification.

My invention relates to improvements in a drying machine and particularly relates to a machine for drying alimentary paste or dough used in the manufacture of macaroni.

The object of my invention is to construct a drying machine in which the dough can be quickly dried without causing the surface or crust of the dough to crack, this I accomplish by constructing the drying machine so that the dough may be subjected to an atmospheric pressure which will dry the dough uniformly without causing the surface to crack; a further object of my invention is to provide means for causing the air in the drying machine to circulate and also for admitting fresh air to the same when desired; these together with other novel features of construction of the parts of the machine, which will be more fully hereinafter described, constitute my invention.

Referring to the drawings: Figure 1. is a plan view of my improved drying machine showing the fan box in section; Fig. 2. is a vertical section on line 2—2 Fig. 1; Fig. 3. is a vertical section on line 3—3 Fig. 1; Fig. 4. is a vertical section on line 4—4 Fig. 3; Fig. 5. is a vertical section on line 5—5 Fig. 3; and, Fig. 6. is a perspective view of the fan box.

In the drawings 1 represents a casing forming the drying chamber 2, said casing 1 is preferably rectangular in form and is provided with racks 3 which divide the drying chamber into different compartments 4 and 5 into which compartments may either be placed the drawers 6, or poles 7, supported upon racks or guides 8, provided for that purpose. The drawers have bottoms formed of wire mesh, upon which is placed the short pieces of dough. The dough is also dried in long coils, such as shown at 10. These coils of dough are hung upon the poles 7, which are suspended between the said cross-pieces 8, which in turn rest upon the racks 3. The said cross-pieces 8 a either the drawers 6 used in any of the co

The drying machin doors 12 and 13, so as the drying chamber a

The drying machin 15, mounted in a fan supported in bearings said fan and is driven or any other suitable

The fan box 16 ex the drying machine, fan passes through th drying chamber, wh tight, so that the air sufficient pressure t dough contained in th upon the poles.

A stop-cock 23 is pr drying machine, whic duce the air pressure when desired.

The fan box is pro located opening 24 cover 25, as shown in opened to admit fresh

When it is desired drying chamber to cir formed at the top of t shown in Figs. 3 and of the rod 27, which is ing door 28, adapted aperture 26. When opened the air will be the drying chamber in 30, from which it is dra ing 31, into the fan box the fan box may be cl the drying chamber cover may be opened desired.

Having thus descri claim and desire to sec

In a drying room, casing forming a dryin located adjacent said having an aperture for ting air to the lower p chamber, a fan in said chamber having an o

PATENTED JUNE 16, 1908.

L. VERNA.

DRYING ROOM.

APPLICATION FILED OCT. 22, 1907.

2 SHEETS—SHEET 2.

FIG. 3.

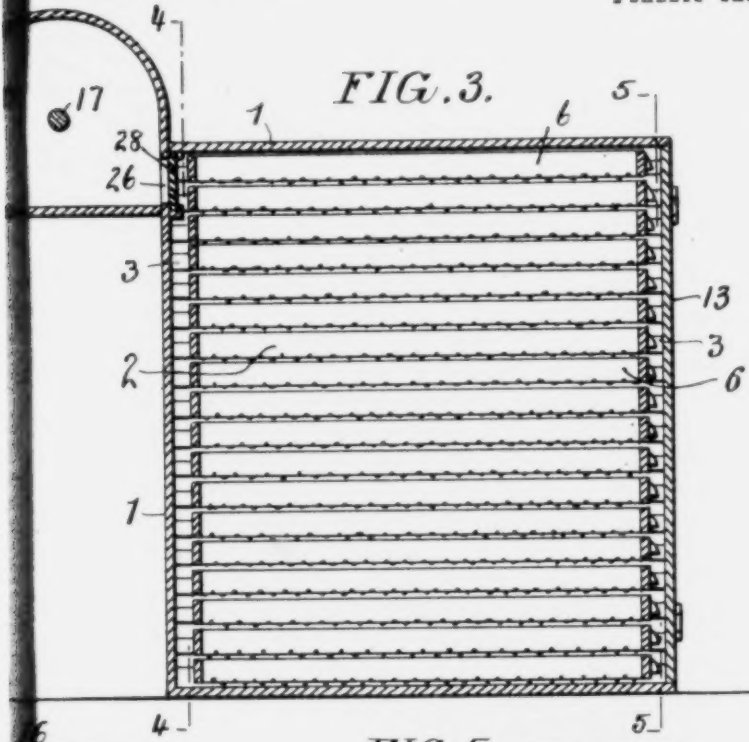

FIG. 5.

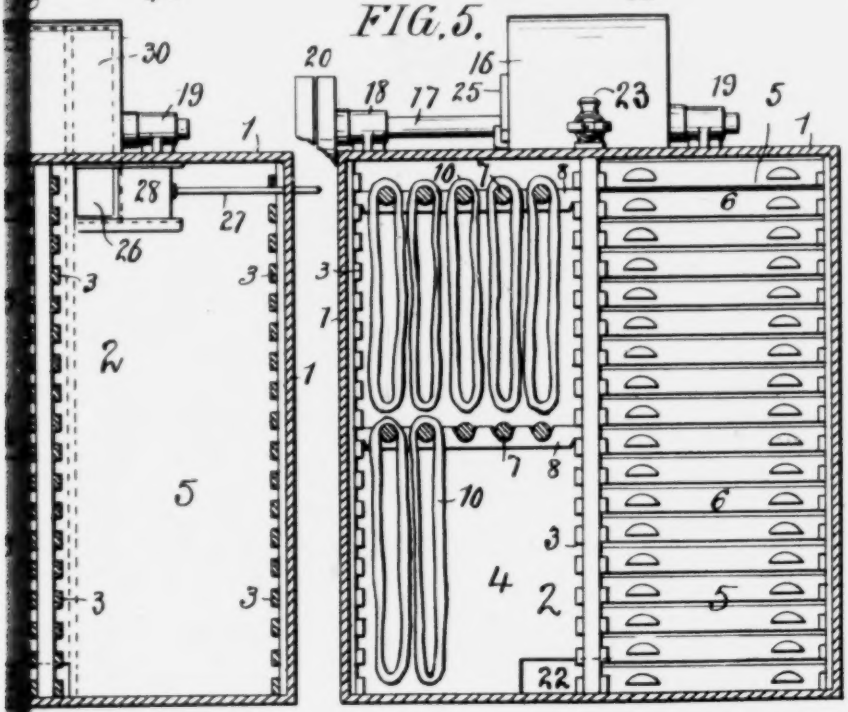

Inventor:
Luigi Verna
By his Attorney
F. Dellett Goodwin

Witness, Jr

UNITED STATES PATENT OFFICE.

LUIGI VERNA, OF PHILADELPHIA, PENNSYLVANIA.

DRYING-ROOM.

No. 891,019. Specification of Letters Patent. Patented June 16, 1908.

Application filed October 22, 1907. Serial No. 398,611.

To all whom it may concern:

Be it known that I, LUIGI VERNA, a citizen of the United States, residing at Philadelphia, in the county of Philadelphia and State of Pennsylvania, have invented certain new and useful Improvements in Drying-Rooms, of which the following is a specification.

My invention relates to improvements in a drying machine and particularly relates to a machine for drying alimentary paste or dough used in the manufacture of macaroni.

The object of my invention is to construct a drying machine in which the dough can be quickly dried without causing the surface or crust of the dough to crack, this I accomplish by constructing the drying machine so that the dough may be subjected to an atmospheric pressure which will dry the dough uniformly without causing the surface to crack; a further object of my invention is to provide means for causing the air in the drying machine to circulate and also for admitting fresh air to the same when desired; these together with other novel features of construction of the parts of the machine, which will be more fully hereinafter described, constitute my invention.

Referring to the drawings: Figure 1. is a plan view of my improved drying machine showing the fan box in section; Fig. 2. is a vertical section on line 2—2 Fig. 1; Fig. 3. is a vertical section on line 3—3 Fig. 1; Fig. 4. is a vertical section on line 4—4 Fig. 3; Fig. 5. is a vertical section on line 5—5 Fig. 3; and, Fig. 6. is a perspective view of the fan box.

In the drawings 1 represents a casing forming the drying chamber 2, said casing 1 is preferably rectangular in form and is provided with racks 3 which divide the drying chamber into different compartments 4 and 5 into which compartments may either be placed the drawers 6, or poles 7, supported upon racks or guides 8, provided for that purpose. The drawers have bottoms formed of wire mesh, upon which is placed the short pieces of dough. The dough is also dried in long coils, such as shown at 10. These coils of dough are hung upon the poles 7, which are suspended between the said cross-pieces 8, which in turn rest upon the racks 3. The said cross-pieces 8 are removable, so that either the drawers 6 or the poles 7 may be used in any of the compartments as desired.

The drying machine is provided with large doors 12 and 13, so as to make the interior of the drying chamber accessible.

The drying machine is provided with a fan 15, mounted in a fan box 16. A shaft 17, supported in bearings 18 and 19, carries the said fan and is driven by the belt wheels 20, or any other suitable means.

The fan box 16 extends to the bottom of the drying machine, where the air from the fan passes through the aperture 22 into the drying chamber, which is practically air tight, so that the air will be held under a sufficient pressure to uniformly dry the dough contained in the drawers or suspended upon the poles.

A stop-cock 23 is provided at the top of the drying machine, which may be opened to reduce the air pressure in the drying chamber when desired.

The fan box is provided with a centrally located opening 24 having an adjustable cover 25, as shown in Fig. 6; which may be opened to admit fresh air to the fan.

When it is desired to cause the air in the drying chamber to circulate, the aperture 26, formed at the top of the drying chamber, as shown in Figs. 3 and 4, is opened by means of the rod 27, which is connected with a sliding door 28, adapted to tightly close said aperture 26. When said aperture 26 is opened the air will be drawn from the top of the drying chamber into the return chamber 30, from which it is drawn, through the opening 31, into the fan box 16. The cover 25, of the fan box may be closed so that the air in the drying chamber will circulate, or the cover may be opened to admit fresh air as desired.

Having thus described my invention I claim and desire to secure by Letters Patent:

In a drying room, the combination of a casing forming a drying chamber, a fan box located adjacent said drying chamber and having an aperture formed therein for admitting air to the lower portion of said drying chamber, a fan in said fan box, said drying chamber having an aperture formed in the

upper portion thereof, a return chamber communicating with said aperture in the upper portion of said drying chamber and with said fan box, means for closing said last mentioned aperture, racks formed in said drying chamber and means supported upon said racks for carrying the articles to be dried.

In testimony whereof I affix my signature in presence of two witnesses.

LUIGI VERNA.

Witnesses:
JOSEPH B. LANNING,
J. F. G. ATTLIN.

836 (Defendants' Exhibit P, Letters Patent No. V. C. Koons, March 30, 1909.)

a return chamber com-
aperture in the upper
chamber and with said
ing said last mentioned
d in said drying cham-
orted upon said racks
es to be dried.

In testimony whereof I affix my signature in presence of two witnesses.

LUIGI VERNA.

Witnesses:
JOSEPH B. LANNING,
J. F. G. ATTLIN.

836 (Defendants' Exhibit P, Letters Patent No. 916,454 to V. C. Koons, March 30, 1909.)

690

V. C. KOONS.

INCUBATOR.

APPLICATION FILED JULY 3, 1907.

916,454.

Patented Mar. 30, 1909.

4 SHEETS—SHEET 1.

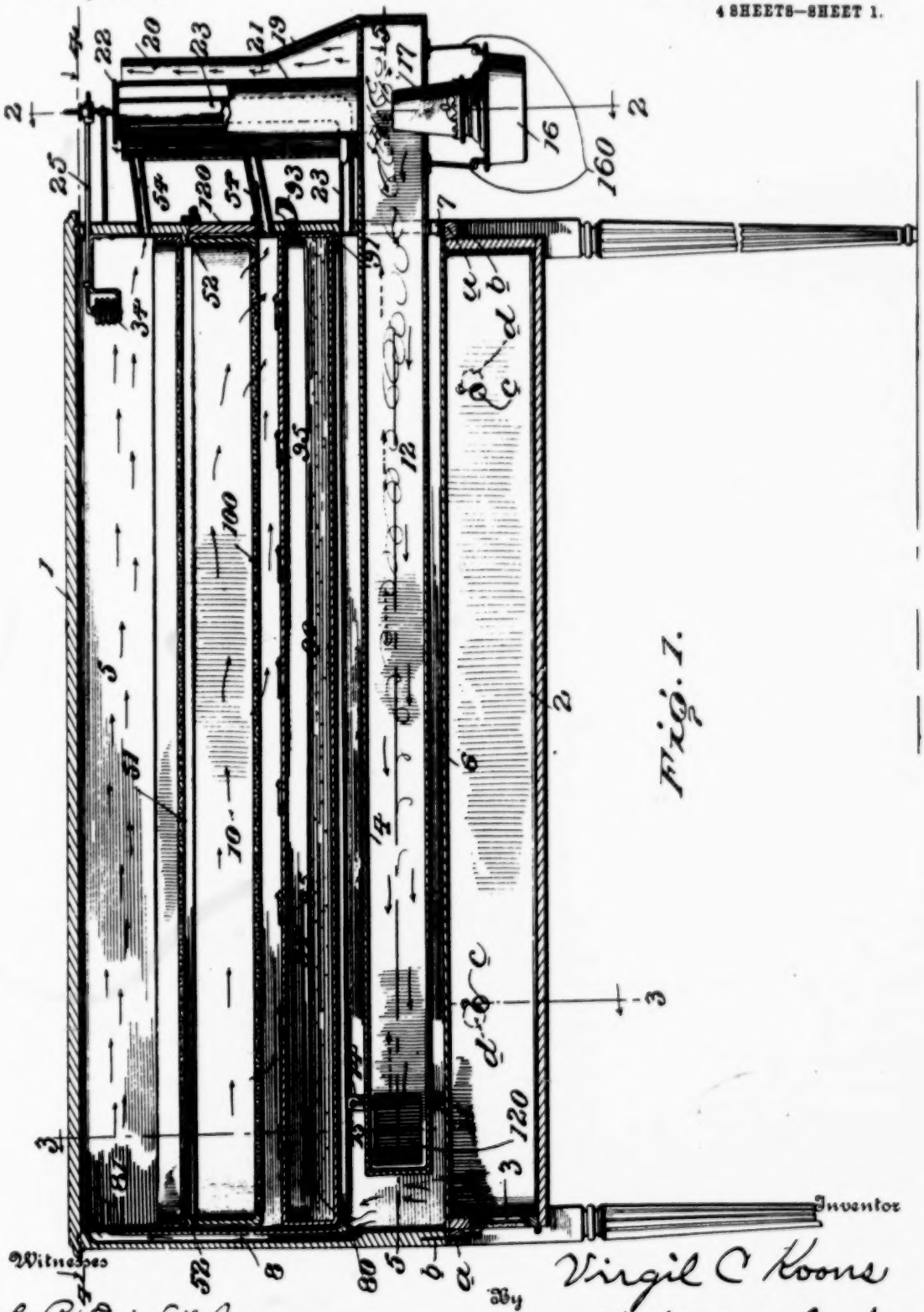

Fig. 1.

Witnesses

C. P. Wright Jr.

E. R. Peck

Inventor

Virgil C. Koons

By Hubert E. Peck

Attorney

692

V. C. KOONS.

INCUBATOR.

APPLICATION FILED JULY 3, 1907.

916,454.

Patented Mar. 30, 1909.

4 SHEETS—SHEET 2.

Fig. 2.

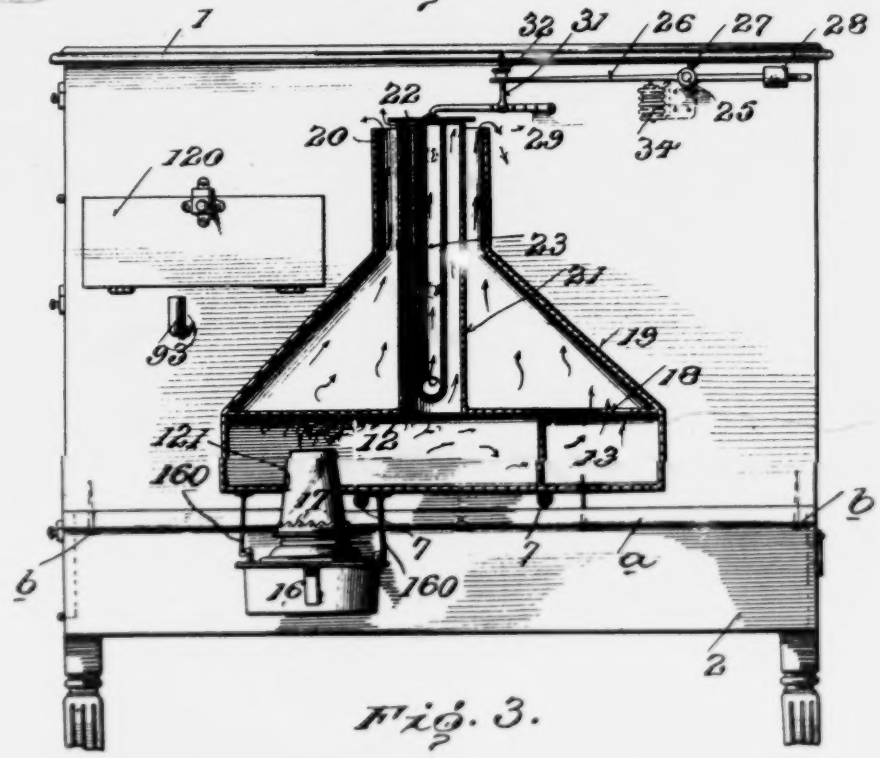

Fig. 3.

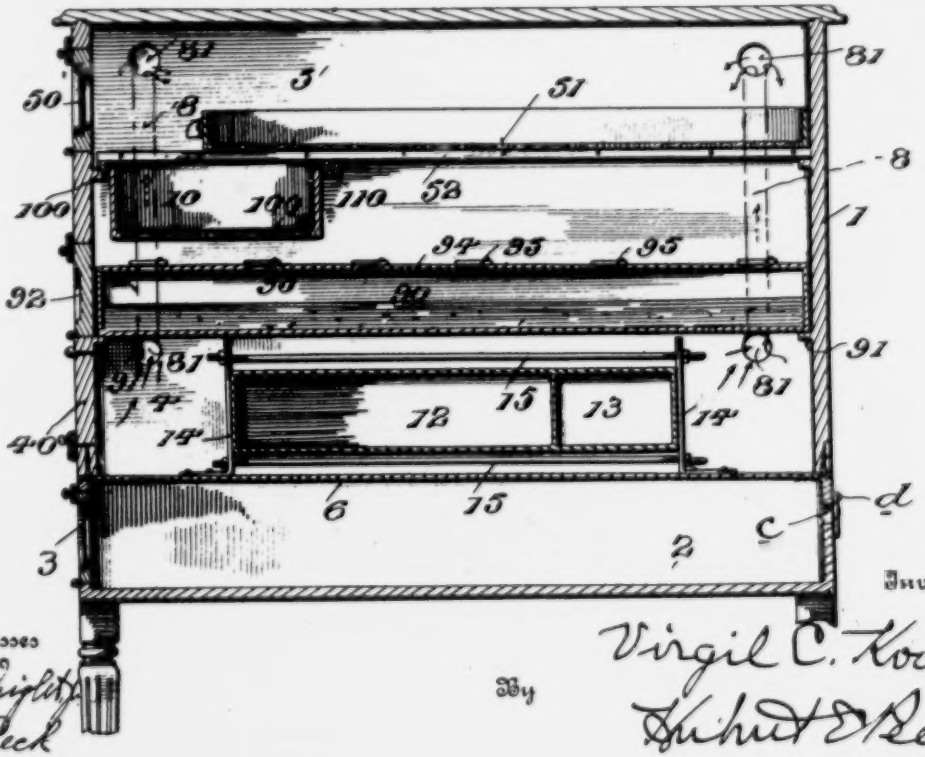

Witnesses

E. P. Wright

E. R. Peck

Inventor

Virgil C. Koons

By Hubert E. Peck

Attorney

694

V. C. KOONS.

INCUBATOR.

APPLICATION FILED JULY 3, 1907.

916,454.

Patented Mar. 30, 1909.

4 SHEETS—SHEET 3.

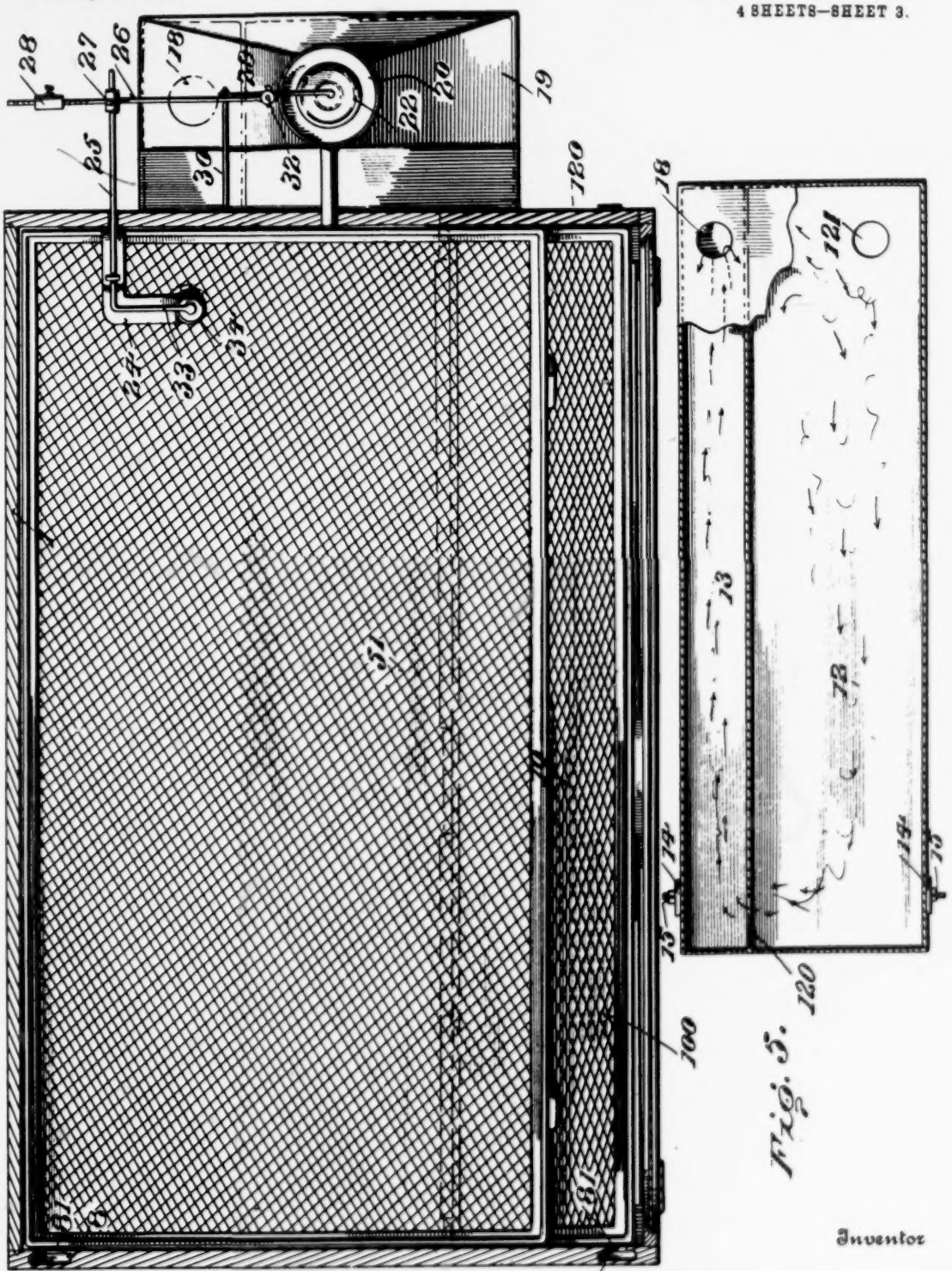

Fig. 3.

Witnesses

C. P. Wright Jr.

E. R. Peck

Fig. 4.

Inventor

By Virgil C. Koons

Hubert E. Peck

Attorney

696

V. C. KOONS.

INCUBATOR.

APPLICATION FILED JULY 3, 1907.

916,454.

Patented Mar. 30, 1909.

4 SHEETS—SHEET 4.

Fig. 6.

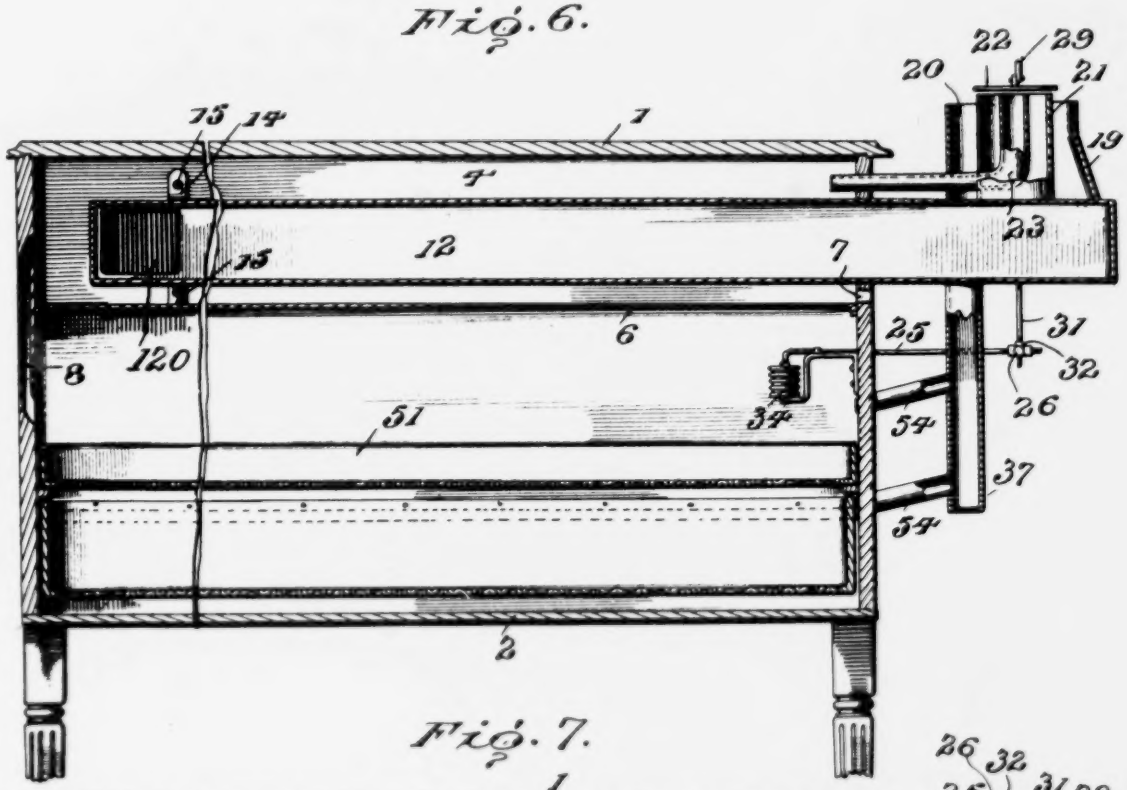

Fig. 7.

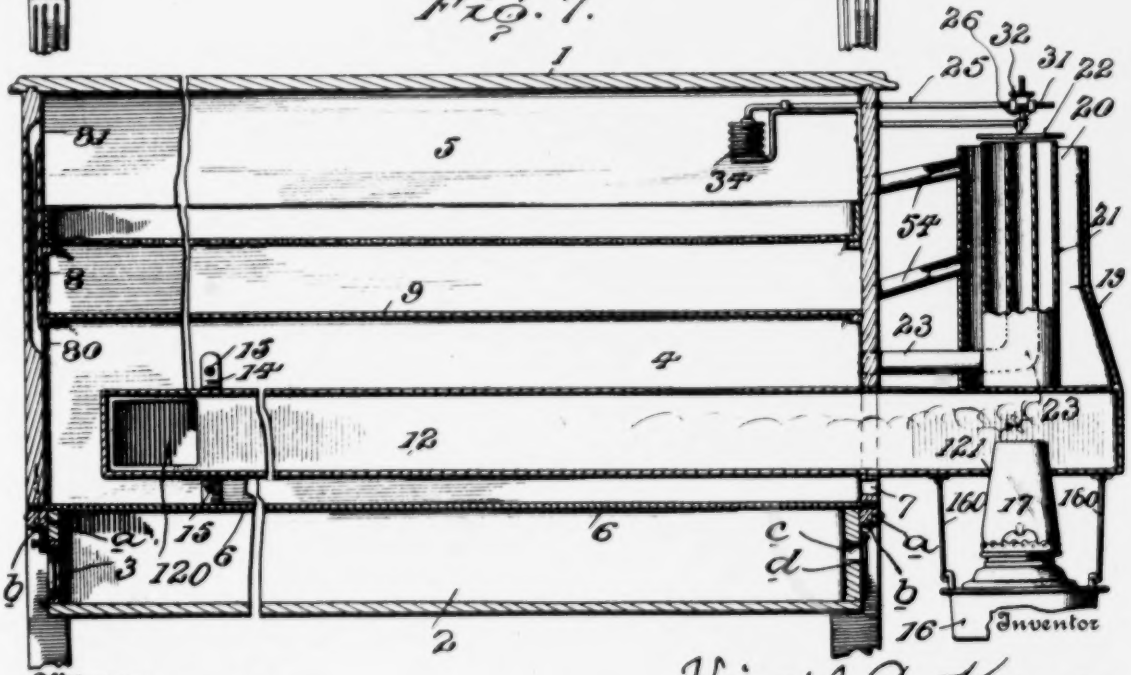

Witnesses
C. P. Wright, Jr.
E. R. Peck

Virgil C. Koons
By Kuhnt & Peck
Attorney

UNITED STATES PATENT

VIRGIL C. KOONS, OF COLORADO SPRINGS, COLORADO, ASSIGNO
MANUFACTURING COMPANY, OF COLORADO SPRINGS, COLOR
COLORADO.

INCUBATOR.

No. 916,454. Specification of Letters Patent.

Application filed July 3, 1907. Serial No. 382,084.

To all whom it may concern:

Be it known that I, VIRGIL C. KOONS, a citizen of the United States, residing at Colorado Springs, El Paso county, Colorado, have invented certain new and useful Improvements in Incubators; and I do hereby declare the following to be a full, clear, and exact description of the invention, such as will enable others skilled in the art to which it appertains to make and use the same.

This invention relates to certain improvements in incubators; and the objects and nature of the invention will be readily understood by those skilled in the art in the light of the following explanations of the structures shown in the accompanying drawings as my preferred embodiments from among other constructions within the spirit and scope of my invention.

My invention consists in certain novel features in construction and arrangement and in combinations as more fully and particularly set forth hereinafter.

Referring to the accompanying drawings: Figure 1, is a longitudinal section taken vertically through the incubator. Fig. 2, is a vertical cross section taken on the line 2—2, Fig. 1. Fig. 3, is a vertical cross section in the plane of the line 3—3, Fig. 1. Fig. 4, is a horizontal section on the line 4—4, Fig. 1. Fig. 5, is a longitudinal horizontal section on a reduced scale on the line 5—5, Fig. 1. Figs. 6 and 7, are vertical longitudinal sections illustrating modified arrangements.

The incubator comprises a suitably formed and constructed case, or inclosure 1. At the bottom or under side of the incubator case, I can, if desired, arrange a brooder chamber 2, in which the chicks can be kept until placed in a stationary or other regular brooder. This brooder 2, usually consists of a rectangular box, open at the top and detachably secured in any suitable manner to the incubator case usually forming a downward continuation thereof with the bottom wall of the incubator case forming the top wall or ceiling of said brooder. For instance, cleats or strips *a*, can be secured along the outer faces of the upper edges of the end walls of the brooder, and removable vertical screws *b*, can be passed up through the cleats and into the lower edges of the end walls of the incubator casing. Said brooder is usually formed with openings *c*, in its closed and opene covers or dampers ing normally close door 3, usually in t

The interior of t ally divided hori chamber 4, and an e I show the heated, heating, chamber throughout the leng part of the case, a brooder 2, with th metal floor or par bottom of the case heating chamber brooder, so that th through said floor chamber.

Suitable means heating chamber f ber except for the said chambers thr air flues 8. For in horizontal usually forming the ceilin chamber and the fl chamber, although experience, I prefer to form the partitio tank.

I usually provid with a front openi removable or hinge provide the incuba opening approximat of the hatching cha by a hinged door 5 one or more glass p which the interior o served.

In the hatching ch for carrying the egg able number of egg of any suitable or a material. In the dr zontally arranged eg mediate the height and sliding and supp cleats 52, secured to tray is inserted an front opening closed

V. C. KOONS.

INCUBATOR.

APPLICATION FILED JULY 3, 1907.

Patented Mar. 30, 1909.

4 SHEETS—SHEET 4.

Fig. 6.

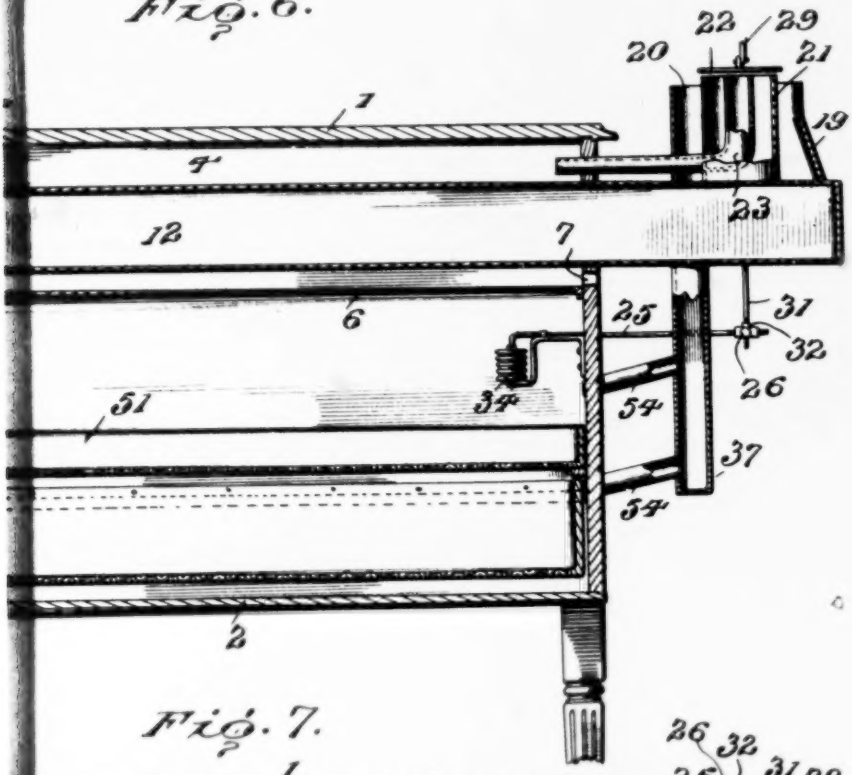

Fig. 7.

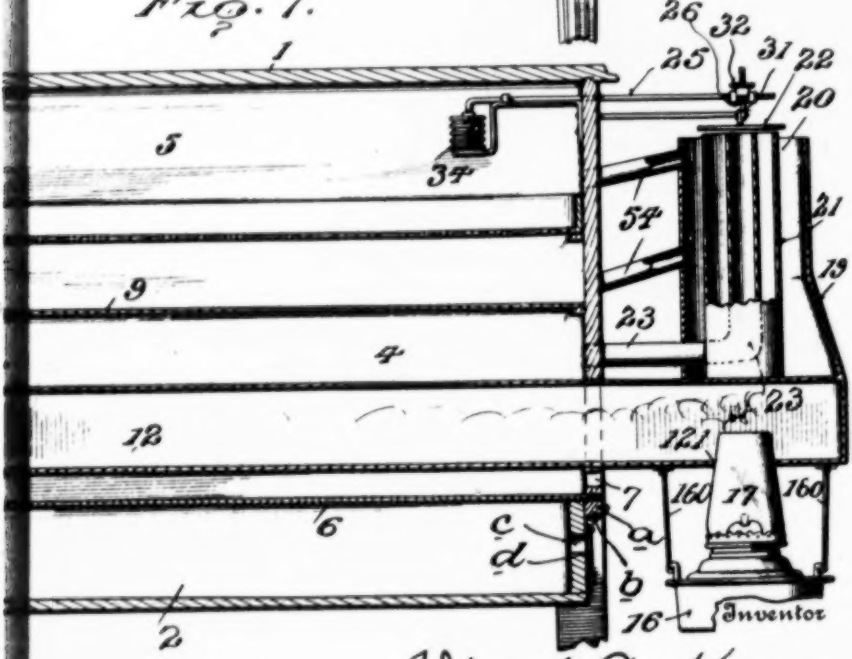

Virgil C. Koons

By Kuhnt & Peck

Attorney

UNITED STATES PATENT OFFICE.

VIRGIL C. KOONS, OF COLORADO SPRINGS, COLORADO, ASSIGNOR TO THE CONTINENTAL MANUFACTURING COMPANY, OF COLORADO SPRINGS, COLORADO, A CORPORATION OF COLORADO.

INCUBATOR.

No. 916,454. Specification of Letters Patent. Patented March 30, 1909.

Application filed July 3, 1907. Serial No. 382,084.

To all whom it may concern:

Be it known that I, VIRGIL C. KOONS, a citizen of the United States, residing at Colorado Springs, El Paso county, Colorado, have invented certain new and useful Improvements in Incubators; and I do hereby declare the following to be a full, clear, and exact description of the invention, such as will enable others skilled in the art to which it appertains to make and use the same.

This invention relates to certain improvements in incubators; and the objects and nature of the invention will be readily understood by those skilled in the art in the light of the following explanations of the structures shown in the accompanying drawings as my preferred embodiments from among other constructions within the spirit and scope of my invention.

My invention consists in certain novel features in construction and arrangement and in combinations as more fully and particularly set forth hereinafter.

Referring to the accompanying drawings: Figure 1, is a longitudinal section taken vertically through the incubator. Fig. 2, is a vertical cross section taken on the line 2—2, Fig. 1. Fig. 3, is a vertical cross section in the plane of the line 3—3, Fig. 1. Fig. 4, is a horizontal section on the line 4—4, Fig. 1. Fig. 5, is a longitudinal horizontal section on a reduced scale on the line 5—5, Fig. 1. Figs. 6 and 7, are vertical longitudinal sections illustrating modified arrangements.

The incubator comprises a suitably formed and constructed case, or inclosure 1. At the bottom or under side of the incubator case, I can, if desired, arrange a brooder chamber 2, in which the chicks can be kept until placed in a stationary or other regular brooder. This brooder 2, usually consists of a rectangular box, open at the top and detachably secured in any suitable manner to the incubator case usually forming a downward continuation thereof with the bottom wall of the incubator case forming the top wall or ceiling of said brooder. For instance, cleats or strips *a*, can be secured along the outer faces of the upper edges of the end walls of the brooder, and removable vertical screws *b*, can be passed up through the cleats and into the lower edges of the end walls of the incubator casing. Said brooder is usually formed with one or more ventilating openings *c*, in its side walls adapted to be closed and opened by exterior swinging covers or dampers *d*, and with a front opening normally closed by a swinging or hinged door 3, usually in the form of a glazed sash.

The interior of the incubator casing is usually divided horizontally into a heating chamber 4, and an egg or hatching chamber 5. I show the heated, or what might be termed heating, chamber 4, extending horizontally throughout the length and width of the lower part of the case, and immediately above the brooder 2, with the horizontal usually sheet metal floor or partition 6, which closes the bottom of the case and forms the floor of the heating chamber and the top wall of the brooder, so that the heat can radiate down through said floor 6, to heat the brooder chamber.

Suitable means are provided to close the heating chamber from the hatching chamber except for the communication between said chambers through the medium of hot air flues 8. For instance, in Fig. 7, I show horizontal usually sheet metal partition 9, forming the ceiling or top of the heating chamber and the floor of the egg or hatching chamber, although as at present advised by experience, I prefer, as hereinafter described to form the partition or division by a water tank.

I usually provide the heating chamber with a front opening normally closed by a removable or hinged door 40. I also usually provide the incubator casing with a front opening approximately across the full width of the hatching chamber and normally closed by a hinged door 50, usually provided with one or more glass panels or the like through which the interior of the chamber can be observed.

In the hatching chamber, I arrange means for carrying the eggs, for instance, any suitable number of egg trays can be employed of any suitable or approved construction or material. In the drawings, I show one horizontally arranged egg tray 51, arranged intermediate the height of the hatching chamber and sliding and supported on horizontal end cleats 52, secured to the casing ends. This tray is inserted and removed through the front opening closed by door 50, and has an

egg supporting floor of open-work or reticulated material through which the air can freely circulate around the eggs.

At one end fresh or outside air is admitted into the lower part of the heating chamber 4, through one or more air ducts 7, opening from the exterior through the end wall of the casing which carries the lamp heater, hereinafter described. From the opposite end of the heating chamber one or more vertical flues 8, convey the heated air upwardly and discharge the same into the upper portion of an end of the hatching chamber. In the specific example illustrated, I show the vertical flues 8, arranged at the opposite corners of said end and within the end wall with air inlets 80, at their lower ends from the upper portion of the heating chamber end and at their upper ends having outlets 81, into the upper portion of the corresponding end of the egg chamber. At the opposite end of the egg or hatching chamber, from the heated air inlets, I provide one or more outlet or discharge passages 54, opening through the casing end, said discharge or outlet pipes or passages being usually arranged above and below the egg tray so that the heated air will circulate throughout the hatching chamber and around the eggs; the draft through the chamber being maintained by the outward passage of air in the outlet or discharge pipes or passages 54.

A suitable heating system is provided for the heating chamber, for the purpose of maintaining the desired temperature in the hatching chamber and other portions of the apparatus. Various systems, within the scope of certain features of my invention, can be provided for this purpose. In the specific example illustrated, I show closed heating pipes, flues or drums longitudinally arranged within said chamber and adapted to heat the air therein, said flues removably extending through one end of the incubator casing and at the exterior of said casing, receiving the heating medium, as from a lamp, and provided with the exhaust or discharge. I show a hollow sheet metal heating drum 12, within and arranged approximately throughout the length of the heating chamber and at the lamp or heat receiving end projecting through the casing end and a distance beyond the exterior thereof. A sheet metal return drum or flue 13, is arranged beside and throughout the length of the heating drum and also extends through the casing end to the exterior thereof. At their inner or rear ends these two drums communicate through a discharge opening 120 from the heating drum to the return drum. These heating drums or flues are preferably secured together and are closed against communication between their interiors and the interior of the heating chamber to prevent escape of gases or products of combustion into the heating chamber. Said drums are supported a distance above the bottom or floor of the heating chamber and are also arranged below the top wall thereof so that the air can circulate around the drums. At their outer end portions the drums removably pass through and are suitably supported in the casing end, while at their inner ends the drums are supported by uprights or standards 14, secured to the floor 6, of the heating chamber and arranged on opposite sides of the drums and connected above and below the drums by cross bolts 15, having nuts so that the bolts can be tightened to clamp the uprights to the drums in the desired vertical adjustment. The bolts can be loosened when it is desired to raise or lower the drums and then tightened to clamp the drums in the desired position. Also the bolts can be loosened and the drums slipped out through the end of the casing for cleaning or repair. Any suitable heater can be employed, although in the drawings I show removable lamp 16, at the exterior of the casing and suitably hung as by hooks 160 from the heating drum, with its metal chimney 17, removably projecting up into the exterior end of said drum 12 through an opening 121 in the bottom wall thereof. The outer or exterior end of the return flue or drum is arranged beside the exterior or heater receiving end of the heating drum, and is provided with a top discharge opening or outlet 18.

A vertically disposed upwardly converging sheet metal hood or casing 19, is arranged at the exterior of the casing end and is secured on and rises from and incloses the top surfaces of the projecting ends of the heating and return flues. This hood is arranged directly over the lamp receiving end of the heating flue and directly over the discharge end of the return flue so that the top discharge 18, of the return flue opens into said hood. The hood converges upwardly to a reduced top discharge 20. The portion of the top wall of the heating flue against which the heat of the lamp directly impinges forms a part of the floor of said hood and hence the air in said hood is heated and rises thereby creating an upward draft through said hood and out through the top discharge 20, thereof, whereby a suction is created through the return flue discharge 18, maintaining a draft through said return flue and from the inner end of the heating flue. By this means the necessary draft is kept up through the heating and return flues to maintain proper combustion with a full lamp flame, whereby the lamp can be kept burning to the desired extent and the heat will be utilized to the maximum. Furthermore by thus maintaining an even forced draft, the heat is equally distributed throughout the heating flues and can be carried to a maxi-

mum distance laterally or horizontally from the lamp. Such a system permits the use of incubators of maximum capacity and horizontal length in connection with the one lamp or single heating system.

I usually arrange the end fresh air inlets 7, into the heating chamber, below the heating flues and into the space between the bottoms of said flues and the floor of the heating chamber, whereby said fresh or cool air passes along and around said flues and is heated to the desired extent before reaching the heated air offtakes at the opposite end of the heating chamber.

To aid in maintaining the desired circulation of air through the heating and hatching chambers, I usually arrange the discharge pipes 54, above and below the egg tray and at their outer ends opening into the upper end portion of the hood or casing 19, a distance below the upper or discharge end 20, thereof. The upward draft through said hood 19, tends to draw the air through the pipes 54, and from the hatching chamber to maintain the desired circulation through said chamber, and the vitiated air from said hatching chamber is thus drawn off and discharged through and from the hood with the waste products from the heating system.

I provide means for regulating or controlling the temperature of the hatching chamber and for relieving the heating system from the heated products when the same becomes overheated. Various means can be employed for this purpose, within the spirit and scope of my invention, but in the specific example illustrated, I show a vertical escape pipe 21, arranged about concentrically within the hood 19, with its upper open end about flush with the open top or discharge end of the hood. At its lower end this pipe 21, opens into the heating flue 12, through the top wall thereof. This escape pipe 21, is normally closed against the escape of heat or products therethrough from the heating flue, by suitable means, such as a flat vertically movable cap or damper 22, resting on and closing the top otherwise open end of said escape pipe 21. I can also provide means to reduce the heat in the heating chamber 4, when the temperature rises beyond the maximum and the escape 21, is opened, by permitting direct outflow of heated air from said chamber without passing said air through or into the hatching chamber 5. For instance, this result can be accompanied by an escape pipe 23, arranged vertically and about concentrically within escape pipe 21 and having its open upper end about flush with the open upper end of pipe 21, so that both pipes 21 and 23, will be simultaneously closed and opened by the single damper 22, said damper being of less diameter than the discharge outlet of the hood 19, so that the said outlet is always

open and not affecte
lower end of pipe 2
passes horizontally
its lower end and
casing end and longi
ing chamber above t
inner end of said p
heating chamber.
that when the damp
pipes 21 and 23, t
heated products fro
the lamp end of heat
atmosphere through
ing through said flue
ture within the heat
heating chamber 4
the opening of pipe 2
air in the heating c
from the heating cha
23, thereby in a mea
mal direction of circu
and discharging the
lamp end of said cha
the heated air from
chamber and from
through flues 8, to
By these arrangeme
the hatching chambe
down to and maintai
degree.

Any suitable ther
can be provided for
22; the thermostat
at any suitable locat
chamber. For insta
tal angular metal bra
in the hatching cha
fixed to the end wa
horizontal rock shaft
supported by said br
through the casing e
the end of the incub
arm 26, is adjustably
set screw 27, to the e
and projects therefr
tions. One end of s
with adjustable co
opposite end of arm
raise the damper 22,
and preferably paral
swingable arm 29, to
the damper 22 is fix
damper is carried
damper carrying arm
horizontal post 30, p
wall of the incubator
is coupled to the dam
cal lift rod 31, at it
joined to arm 29, an
gitudinally threaded
through a vertical op
provided with an adj
ing said arm 26, and
distance between arm
varied. Within the h

-work or reticu-
ch the air can
ggs.
e air is admitted
ting chamber 4,
7, opening from
wall of the cas-
heater, herein-
opposite end of
r more vertical
ir upwardly and
upper portion of
ber. In the spe-
ow the vertical
osite corners of
d wall with air
from the upper
ber end and at
lets 81, into the
esponding end
e opposite end
mber, from the
ne or more out-
pening through
e or outlet pipes
nged above and
e heated air will
tching chamber
aft through the
by the outward
discharge pipes

is provided for
the purpose of
perature in the
portions of the
ns, within the
my invention,
urpose. In the
I show closed
s longitudinally
er and adapted
flues removably
of the incubator
of said casing,
um, as from a
the exhaust or
w sheet metal
nd arranged ap-
e length of the
e lamp or heat
ough the casing
nd the exterior
urn drum or flue
throughout the
and also extends
e exterior there-
ends these two
gh a discharge
ng drum to the
g drums or flues
gether and are
on between their
of the heating
of gases or prod-

ucts of combustion into the heating chamber. Said drums are supported a distance above the bottom or floor of the heating chamber and are also arranged below the top wall thereof so that the air can circulate around the drums. At their outer end portions the drums removably pass through and are suitably supported in the casing end, while at their inner ends the drums are supported by uprights or standards 14, secured to the floor 6, of the heating chamber and arranged on opposite sides of the drums and connected above and below the drums by cross bolts 15, having nuts so that the bolts can be tightened to clamp the uprights to the drums in the desired vertical adjustment. The bolts can be loosened when it is desired to raise or lower the drums and then tightened to clamp the drums in the desired position. Also the bolts can be loosened and the drums slipped out through the end of the casing for cleaning or repair. Any suitable heater can be employed, although in the drawings I show removable lamp 16, at the exterior of the casing and suitably hung as by hooks 160 from the heating drum, with its metal chimney 17, removably projecting up into the exterior end of said drum 12 through an opening 121 in the bottom wall thereof. The outer or exterior end of the return flue or drum is arranged beside the exterior or heater receiving end of the heating drum, and is provided with a top discharge opening or outlet 18.

A vertically disposed upwardly converging sheet metal hood or casing 19, is arranged at the exterior of the casing end and is secured on and rises from and incloses the top surfaces of the projecting ends of the heating and return flues. This hood is arranged directly over the lamp receiving end of the heating flue and directly over the discharge end of the return flue so that the top discharge 18, of the return flue opens into said hood. The hood converges upwardly to a reduced top discharge 20. The portion of the top wall of the heating flue against which the heat of the lamp directly impinges forms a part of the floor of said hood and hence the air in said hood is heated and rises thereby creating an upward draft through said hood and out through the top discharge 20, thereof, whereby a suction is created through the return flue discharge 18, maintaining a draft through said return flue and from the inner end of the heating flue. By this means the necessary draft is kept up through the heating and return flues to maintain proper combustion with a full lamp flame, whereby the lamp can be kept burning to the desired extent and the heat will be utilized to the maximum. Furthermore by thus maintaining an even forced draft, the heat is equally distributed throughout the heating flues and can be carried to a maxi-

mum distance laterally or horizontally from the lamp. Such a system permits the use of incubators of maximum capacity and horizontal length in connection with the one lamp or single heating system.

I usually arrange the end fresh air inlets 7, into the heating chamber, below the heating flues and into the space between the bottoms of said flues and the floor of the heating chamber, whereby said fresh or cool air passes along and around said flues and is heated to the desired extent before reaching the heated air offtakes at the opposite end of the heating chamber.

To aid in maintaining the desired circulation of air through the heating and hatching chambers, I usually arrange the discharge pipes 54, above and below the egg tray and at their outer ends opening into the upper end portion of the hood or casing 19, a distance below the upper or discharge end 20, thereof. The upward draft through said hood 19, tends to draw the air through the pipes 54, and from the hatching chamber to maintain the desired circulation through said chamber, and the vitiated air from said hatching chamber is thus drawn off and discharged through and from the hood with the waste products from the heating system.

I provide means for regulating or controlling the temperature of the hatching chamber and for relieving the heating system from the heated products when the same becomes overheated. Various means can be employed for this purpose, within the spirit and scope of my invention, but in the specific example illustrated, I show a vertical escape pipe 21, arranged about concentrically within the hood 19, with its upper open end about flush with the open top or discharge end of the hood. At its lower end this pipe 21, opens into the heating flue 12, through the top wall thereof. This escape pipe 21, is normally closed against the escape of heat or products therethrough from the heating flue, by suitable means, such as a flat vertically movable cap or damper 22, resting on and closing the top otherwise open end of said escape pipe 21. I can also provide means to reduce the heat in the heating chamber 4, when the temperature rises beyond the maximum and the escape 21, is opened, by permitting direct outflow of heated air from said chamber without passing said air through or into the hatching chamber 5. For instance, this result can be accompanied by an escape pipe 23, arranged vertically and about concentrically within escape pipe 21 and having its open upper end about flush with the open upper end of pipe 21, so that both pipes 21 and 23, will be simultaneously closed and opened by the single damper 22, said damper being of less diameter than the discharge outlet of the head 19, so that the said outlet is always open and not affected by said damper. The lower end of pipe 23 is bent laterally and passes horizontally through pipe 21, above its lower end and through the hood and casing end and longitudinally into the heating chamber above the heating flues, and the inner end of said pipe 23, is open in said heating chamber. The arrangement is such that when the damper 22 is elevated to open pipes 21 and 23, to the atmosphere, the heated products from the lamp will pass from the lamp end of heating flue 12, direct to the atmosphere through pipe 21, instead of passing through said flue, whereby the temperature within the heating flues 12, 13 and the heating chamber 4 will be reduced. Also, the opening of pipe 23, will cause the heated air in the heating chamber to rush direct from the heating chamber through said pipe 23, thereby in a measure reversing the normal direction of circulation in said chamber, and discharging the heated air from the lamp end of said chamber and hence drawing the heated air from the opposite end of the chamber and from its normal course up through flues 8, to the hatching chamber. By these arrangements the temperature in the hatching chamber can be quickly brought down to and maintained about at the desired degree.

Any suitable thermostat actuated means can be provided for controlling the damper 22; the thermostat being usually arranged at any suitable location within the hatching chamber. For instance, I show a horizontal angular metal bracket 24, arranged within the hatching chamber and at one end fixed to the end wall of said chamber. A horizontal rock shaft 25 is mounted on and supported by said bracket and passes loosely through the casing end and projects beyond the end of the incubator casing. A lateral arm 26, is adjustably secured, by sleeve and set screw 27, to the exterior end of this shaft and projects therefrom in opposite directions. One end of said arm 26, is provided with adjustable counterweight 28. The opposite end of arm 26, is connected to raise the damper 22, and is arranged above and preferably parallel with the vertically swingable arm 29, to the free end of which the damper 22 is fixed and by which said damper is carried and controlled. This damper carrying arm 29, is pivoted to a horizontal post 30, projecting from the end wall of the incubator casing. The arm 26, is coupled to the damper arm 29, by a vertical lift rod 31, at its lower end pivotally joined to arm 29, and with its upper longitudinally threaded end passing loosely through a vertical opening in arm 26, and provided with an adjustable nut 32, engaging said arm 26, and by which the normal distance between arms 26 and 29, can be varied. Within the hatching chamber, shaft

25, is formed with a crank arm 33, arranged over the lateral end of bracket 24, and any suitable thermostat 34, is carried by said lateral horizontal end of the bracket and interposed between the same and the outer end of crank arm 33, so that the movement of the thermostat will raise or lower crank arm 33, and consequently rock shaft 25, to raise or lower the damper 22, through the medium of the connections described. The devices can be so set and adjusted that when the temperature in the hatching chamber passes above a certain degree, the thermostat will then operate to raise damper 22, and hold the same raised until the temperature in the hatching chamber drops to the desired degree. The adjustments are such that the parts can be accurately set to raise the damper when a certain degree of temperature is reached in the hatching chamber, and the damper is quickly raised and controlled particularly by reason of the location of the pull rod 31, near the fulcrum of damper arm 29, and also by locating shaft arm 26, over and extending in the same direction as arm 29, although I do not wish to so limit all features of my invention.

Any suitable means can be provided, in or communicating with the hatching chamber, to receive the chicks as hatched from the eggs on the egg tray. I usually provide a suitable receptacle, or the like, in the hatching chamber, to receive the chicks from the tray and in which the chicks are maintained for a suitable period after hatching and until thoroughly dried, preparatory to being placed in the auxiliary brooder 2, if such brooder be employed as an adjunct to the incubator. In the specific example illustrated, this chick drying receptacle or chamber, is formed by a removable box or drawer 10, having a floor, sides and ends and an open top, and arranged below the plane of the egg tray so that the chicks can drop from the egg tray into said receptacle without danger of injury to the chicks. I show the egg tray in length equal to the full length of the hatching chamber, but in width less than the width of the hatching chamber so that when said tray is slipped into the hatching chamber to the rear wall thereof, the front edge of the egg tray will be located a distance rearwardly from the glass paneled front door 50, to the hatching chamber. I show the chick receptacle arranged longitudinally of the hatching chamber between the front wall thereof and the front edge of the egg tray and below the horizontal plane of the top of the front edge of the egg tray, so that the chicks hatched on the tray will travel toward the front edge of the tray, attracted by the light through door 50, and drop into the drawer or receptacle 10. This receptacle is arranged in the hatching chamber and is preferably formed with a reticulated or wire netting floor or bottom 100, permitting free passage therethrough of the heated and moisture laden air so that the circulation of air in the hatching chamber passes through said chick receptacle as well as through the egg tray. The chick drawer or receptacle is shown supported and sliding on the cleats 110, and said drawer can be inserted and removed through an end of the incubator casing, while the egg tray can be inserted or removed over the chick drawer. An opening is formed in an end wall of the incubator casing for the passage of the chick drawer and this opening can be closed by any suitable means or in any suitable manner, as by a separate door 120, as indicated in Figs. 2 and 4.

Any suitable means can be provided to supply the desired degree of moisture in the hatching chamber. I can arrange one or more water pans in the heating chamber, although as at present advised by experiment, I prefer to form the floor of the hatching chamber and top of the heating chamber by a shallow horizontal metal tank 90, forming a partition between the heating and hatching chamber and preferably removably resting on cleats 91, secured at the inner faces of the walls of the incubator casing. I usually form the tank to slide into the incubator casing from the front, through a front opening normally closed by hinged front door 92. At one end the tank can be formed with a threaded hole adapted, when the tank is in its normal position, to register with a hole through an end of the incubator casing. When the tank has been slipped into position in the casing, an elbow or bent nozzle or funnel 93, can be passed through said hole in the casing end and screwed into the hole in the tank end with the upwardly extending funnel end in an upright position with its top at the exterior of the casing and above the water level in the tank. The tank can be supplied with water through this nozzle which also acts as vent for escape of surplus vapor. The tank can be formed at the top to permit passage of the vapor from the water in the tank directly, up into the hatching chamber through the wire net or open floors of the egg tray and chick box, receptacle or drawer, for instance, if so desired the tank can be formed with a top 94, having a suitable number of perforations therethrough for escape of vapor. Also if desired, flat caps 95, can be pivoted on the top 94, a cap for each perforation so that each perforation can be closed if desired by swinging its cap over the same. By this arrangement, the amount of vapor discharged into the hatching chamber can be controlled.

I do not as at present advised, by experience, wish to limit my invention, to incubators of what might be termed the under or bottom heating type, that is the type where the heating devices are arranged below the

hatching chamber, for I can, in my incubator, arrange the hatching chamber below the heating chamber, and cause the heated air to circulate down from the heating chamber to and through the hatching chamber, as shown by Fig. 6. In this arrangement, the heating chamber 4 is arranged in the upper part of the incubator casing, and the hot air flues 8, pass down therefrom to the hatching chamber immediately below the heating chamber, and at the lamp end of the casing, the outlets 54, from the hatching chamber open into a hollow downward extension 37, of the hood 19, and through which an upward draft is maintained by the heat from the lamp rising through the upper part of the hood as hereinbefore described.

The heating system disclosed can be employed in other forms of incubators than those disclosed herein, and can also be used in brooders or other chicken culture apparatus, as well as for heating other devices. The hood 19, or its equivalent, can also be employed in other connections for maintaining a forced draft through various forms or arrangements of heating flues or drums.

It is evident that various changes and modifications might be resorted to, that parts might be omitted or elements added without departing from the spirit and scope of my invention, hence I do not wish to limit myself to the exact constructions and arrangements shown.

What I claim is:—

1. An incubator comprising a casing having a heated chamber arranged longitudinally thereof and a hatching chamber arranged longitudinally thereof, a hot air duct being provided for conveying heated air from an end of the heated chamber and discharging the same into an end of the hatching chamber, a heating drum longitudinally arranged within the heated chamber, said drum being arranged within said chamber to form air spaces around the drum, means for heating said drum, said heated chamber having a fresh air inlet below said drum and at the end of the chamber opposite said hot air duct, whereby the air in said chamber passes around said drum and flows throughout the length of the chamber to said duct, the end of the hatching chamber opposite said duct being provided with a hot air outlet, and thermostatic controlled means for regulating the temperature in said hatching chamber.

2. An incubator having a heated chamber, a hatching chamber, hot air flues from one end of the heated chamber discharging into an end of the hatching chamber, said-hatching chamber provided with an air outlet, a heating drum in the heated chamber provided with a heater, said heated chamber provided with an end air inlet below said heating drum, said heated chamber forming air spaces around
munication with sa
the chamber and v
posite end of the c

3. An incubator
disposed heated c
chamber, a heated
chamber to the
hatching chamber
air outlet, and the
air inlet, heated
nally within the he
the floor thereof an
beyond an end the
with a discharge at
ber, and a heater
of the chamber and
flues to heat the s

4. An incubator
chamber extending
thereof and a hat
with and adjacent
the heated chambe
inlet at one end, a v
opposite end of th
opening into the up
chamber and into t
hatching chamber,
at its opposite end
outlet, a normally
trolled direct heat
heated chamber,
heated chamber for

5. In chicken cul
comprising a heated
therein comprising
flue, said flues bein
each other and com
ner ends, a heater op
of the main flue thro
a hood inclosing th
outer ends of said
and having a top di
turn flue having a
said hood, whereby
heated by said heat
upward draft in th
through the return
the draft is maintai
and return flues.

6. In combination
chamber to be heated
flue arranged therein
flue at its inner end co
receiving the heated
end of the heating
charge opening at its
heater opening throug
posite or outer end o
discharging its produc
and against the top w
charge hood mounted
and inclosing said top
vertically therefrom a
top discharge opening

nk arm 33, arranged
bracket 24, and any
, is carried by said
f the bracket and in-
same and the outer
that the movement
raise or lower crank
tly rock shaft 25, to
per 22, through the
ions described. The
and adjusted that
n the hatching cham-
ain degree, the ther-
e to raise damper 22,
d until the tempera-
hamber drops to the
djustments are such
ccurately set to raise
rtain degree of tem-
he hatching chamber,
kly raised and con-
eason of the location
ear the fulcrum of
so by locating shaft
ding in the same di-
ugh I do not wish to
my invention.
can be provided, in
the hatching cham-
s as hatched from the
I usually provide a
he like, in the hatch-
the chicks from the
hicks are maintained
er hatching and until
eparatory to being
brooder 2, if such
as an adjunct to the
ecific example illus-
receptacle or cham-
ovable box or drawer
es and ends and an
l below the plane of
the chicks can drop
said receptacle with-
the chicks. I show
qual to the full length
er, but in width less
hatching chamber so
lipped into the hatch-
ear wall thereof, the
ray will be located a
m the glass paneled
hatching chamber. I
acle arranged longi-
ng chamber between
and the front edge of
the horizontal plane
dge of the egg tray, so
ed on the tray will
edge of the tray, at
through door 50, and
r receptacle 10. This
n the hatching cham-
formed with a reticu-
lated or wire netting floor or bottom 100, permitting free passage therethrough of the heated and moisture laden air so that the circulation of air in the hatching chamber passes through said chick receptacle as well as through the egg tray. The chick drawer or receptacle is shown supported and sliding on the cleats 110, and said drawer can be inserted and removed through an end of the incubator casing, while the egg tray can be inserted or removed over the chick drawer. An opening is formed in an end wall of the incubator casing for the passage of the chick drawer and this opening can be closed by any suitable means or in any suitable manner, as by a separate door 120, as indicated in Figs. 2 and 4.

Any suitable means can be provided to supply the desired degree of moisture in the hatching chamber. I can arrange one or more water pans in the heating chamber, although as at present advised by experiment, I prefer to form the floor of the hatching chamber and top of the heating chamber by a shallow horizontal metal tank 90, forming a partition between the heating and hatching chamber and preferably removably resting on cleats 91, secured at the inner faces of the walls of the incubator casing. I usually form the tank to slide into the incubator casing from the front, through a front opening normally closed by hinged front door 92. At one end the tank can be formed with a threaded hole adapted, when the tank is in its normal position, to register with a hole through an end of the incubator casing. When the tank has been slipped into position in the casing, an elbow or bent nozzle or funnel 93, can be passed through said hole in the casing end and screwed into the hole in the tank end with the upwardly extending funnel end in an upright position with its top at the exterior of the casing and above the water level in the tank. The tank can be supplied with water through this nozzle which also acts as vent for escape of surplus vapor. The tank can be formed at the top to permit passage of the vapor from the water in the tank directly, up into the hatching chamber through the wire net or open floors of the egg tray and chick box, receptacle or drawer, for instance, if so desired the tank can be formed with a top 94, having a suitable number of perforations therethrough for escape of vapor. Also if desired, flat caps 95, can be pivoted on the top 94, a cap for each perforation so that each perforation can be closed if desired by swinging its cap over the same. By this arrangement, the amount of vapor discharged into the hatching chamber can be controlled.

I do not as at present advised, by experience, wish to limit my invention, to incubators of what might be termed the under or bottom heating type, that is the type where the heating devices are arranged below the

hatching chamber, for I can, in my incubator, arrange the hatching chamber below the heating chamber, and cause the heated air to circulate down from the heating chamber to and through the hatching chamber, as shown by Fig. 6. In this arrangement, the heating chamber 4 is arranged in the upper part of the incubator casing, and the hot air flues 8, pass down therefrom to the hatching chamber immediately below the heating chamber, and at the lamp end of the casing, the outlets 54, from the hatching chamber open into a hollow downward extension 37, of the hood 19, and through which an upward draft is maintained by the heat from the lamp rising through the upper part of the hood as hereinbefore described.

The heating system disclosed can be employed in other forms of incubators than those disclosed herein, and can also be used in brooders or other chicken culture apparatus, as well as for heating other devices. The hood 19, or its equivalent, can also be employed in other connections for maintaining a forced draft through various forms or arrangements of heating flues or drums.

It is evident that various changes and modifications might be resorted to, that parts might be omitted or elements added without departing from the spirit and scope of my invention, hence I do not wish to limit myself to the exact constructions and arrangements shown.

What I claim is:—

1. An incubator comprising a casing having a heated chamber arranged longitudinally thereof and a hatching chamber arranged longitudinally thereof, a hot air duct being provided for conveying heated air from an end of the heated chamber and discharging the same into an end of the hatching chamber, a heating drum longitudinally arranged within the heated chamber, said drum being arranged within said chamber to form air spaces around the drum, means for heating said drum, said heated chamber having a fresh air inlet below said drum and at the end of the chamber opposite said hot air duct, whereby the air in said chamber passes around said drum and flows throughout the length of the chamber to said duct, the end of the hatching chamber opposite said duct being provided with a hot air outlet, and thermostatic controlled means for regulating the temperature in said hatching chamber.

2. An incubator having a heated chamber, a hatching chamber, hot air flues from one end of the heated chamber discharging into an end of the hatching chamber, said hatching chamber provided with an air outlet, a heating drum in the heated chamber provided with a heater, said heated chamber provided with an end air inlet below said heating drum, said heated chamber forming air spaces around said drum and communicating with said air inlet at one end of the chamber and with said flues at the opposite end of the chamber.

3. An incubator having a horizontally disposed heated chamber, and a hatching chamber, a heated air flue from the heated chamber to the hatching chamber, the hatching chamber being provided with an air outlet, and the heated chamber with an air inlet, heated flues arranged longitudinally within the heating chamber and above the floor thereof and projecting through and beyond an end thereof, said flues provided with a discharge at the exterior of the chamber, and a heater arranged at the exterior of the chamber and opening into one of said flues to heat the same.

4. An incubator having an internal heated chamber extending throughout the length thereof and a hatching chamber parallel with and adjacent to the heated chamber, the heated chamber provided with an air inlet at one end, a vertical hot air flue in the opposite end of the incubator casing and opening into the upper portion of the heated chamber and into the upper portion of the hatching chamber, said hatching chamber at its opposite end provided with an air outlet, a normally closed thermostatic-controlled direct heated-air outlet from said heated chamber, and means within the heated chamber for heating the air therein.

5. In chicken culture apparatus a casing comprising a heated chamber, heating flues therein comprising a main flue and a return flue, said flues being arranged adjacent to each other and communicating at their inner ends, a heater opening into the outer end of the main flue through the bottom thereof, a hood inclosing the top portions of the outer ends of said flues above said heater and having a top discharge opening, the return flue having a discharge opening into said hood, whereby the air in the hood is heated by said heater thereby creating an upward draft in the hood and a suction through the return flue discharge whereby the draft is maintained through the main and return flues.

6. In combination, a casing having a chamber to be heated, an elongated heating flue arranged therein, an elongated return flue at its inner end communicating with and receiving the heated products from the inner end of the heating flue and having a discharge opening at its outer or opposite end, a heater opening through the bottom of the opposite or outer end of said heating flue and discharging its products upwardly thereinto and against the top wall thereof, and a discharge hood mounted on said heating flue and inclosing said top wall thereof and rising vertically therefrom and having a contracted top discharge opening, said discharge open-

ing of the return flue opening into said hood, for the purposes substantially as described.

7. In combination, a casing having a chamber to be heated, an elongated heating flue arranged horizontally in said chamber, the outer end of said flue having a bottom opening, a heating lamp adapted to discharge its products vertically into said flue and against the top wall thereof, an elongated return flue at its inner end communicating with the inner end of said heating flue, and at its outer end having a vertically disposed discharge hood arranged over the outer end of said heating flue under which the heating lamp is located, and having a contracted top discharge opening, whereby the heat radiated upwardly from said lamp and through said wall maintains an upward draft through said hood.

8. In chicken culture apparatus, a heating apparatus comprising elongated horizontally disposed main and return flues communicating at their inner ends to carry the heated products through the main flue and from the inner end thereof back through the return flue, the main flue at its outer end adapted to receive the heated products from a heating lamp arranged below the same, the return flue being arranged beside the main flue and having a discharge opening at its outer end for the escape of the heated products, and means arranged over said discharge and adapted to be heated by said lamp for maintaining a forced draft through said main and return flue and out through said discharge.

9. Chicken culture apparatus having, a chamber to be heated, a heating flue therein adapted to receive heated products from a heating lamp and having a vertical discharge, and a hot air discharge pipe from said heated chamber direct to the exterior of the chamber, means normally closing said pipe, and heat controlled mechanism for actuating said means to open said pipe.

10. Chicken culture apparatus having, a chamber to be heated, and a hatching chamber having an air outlet, said first mentioned chamber having a fresh air supply, a heated air passage connecting said chambers, a normally closed direct air outlet from said chamber to be heated, and means for opening said outlet, for the purposes substantially as described.

11. Chicken culture apparatus having, a heated chamber having a fresh air inlet, a hatching chamber having an outlet, a passage for heated air from the heated chamber to said hatching chamber, a direct outlet pipe from the heated chamber to the atmosphere for cooling said chambers, a damper normally closing said pipe, and thermostat actuating means for opening said damper, said actuating means being controlled by the temperature of said hatching chamber.

12. An incubator comprising a casing having a hatching chamber and a heated chamber, means for heating the heated chamber comprising a heating flue adapted to receive the heated products of a heating lamp and having a vertical discharge, means being provided to normally permit circulation of fresh air into and through the heated chamber, and therefrom into and through the hatching chamber, said means comprising a discharge duct from the hatching chamber into said vertical discharge, normally closed means for discharging the heated products direct from said flue without passing the same therethrough, normally closed means for discharging heated air direct from said heated chamber to stop the normal circulation from the heated chamber to the hatching chamber, and a thermostatic regulator for opening and closing said two last mentioned means.

13. Chicken culture apparatus having, a chamber to be heated, heating flues therein comprising a main flue and a return flue having a discharge at its outer end, said flues communicating at their inner ends to carry the heated products throughout the lengths thereof, said main flue adapted to receive at its outer end the heated products of a heating lamp and having a direct vertical discharge pipe opening through the top wall of its outer end, a direct air outlet pipe from said chamber having its upper outlet end arranged within the upper outlet end of said discharge pipe, a single damper normally closing the upper ends of said two pipes, and thermostat actuating means for moving said damper to open said pipes.

14. An incubator having a hatching chamber and a heated chamber provided with a direct air outlet with a vertical discharge end, means for heating said discharge end to accelerate the discharge therefrom, thermostatic-controlled means normally closing said outlet, and means to normally maintain a constant circulation of fresh air into and through the heated chamber and therefrom into and through the hatching chamber and discharging therefrom, substantially as described.

15. An incubator comprising a casing having a horizontally disposed heated chamber arranged longitudinally thereof, and a longitudinally disposed hatching chamber arranged above the heated chamber, said casing at its rear end provided with a vertical duct from the upper portion of the heated chamber to the upper portion of the rear end of the hatching chamber, the hatching chamber at its front end provided with a heated air outlet, a heating drum arranged longitudinally within the heated chamber and projecting therefrom at the front end of the casing, said heated chamber having a fresh air inlet at its front end, the projecting front end of said drum adapted to

receive the heated products of a heating lamp and provided with a vertical discharge, said front end of the heated chamber having a direct discharge passage to the exterior thereof, and thermostatic controlled means normally closing said discharge.

16. An incubator having a hatching chamber, heating means, and a removable water tank heated by said means and having top openings into the hatching chamber and provided with means for varying the dimensions of said openings to vary the amount of vapor discharged into the hatching chamber.

17. An incubator having a heated chamber having an air inlet, a hatching chamber, having an air outlet, flues for passing heated air from the heated chamber into the hatching chamber and a removable water tank forming the division or partition between said chambers and open into said hatching chamber.

18. An incubator having a hatching chamber, a heated chamber, a heating flue arranged longitudinally and removably in the heated chamber and projecting to the exterior thereof to receive a heating lamp, and means within the heated chamber removably supporting said flue within said chamber.

19. An incubator having a casing with a heated chamber and a hatching chamber, the heated chamber having an air inlet and the hatching chamber an air outlet, means for passing heated air from the heated chamber into the hatching chamber, means for heating air in the heated chamber, and temperature controlling means embodying a normally closed direct outlet from the heated chamber to the exterior of the casing, and a normally closed direct outlet for reducing the temperature of said air heating means and a thermostatic regulator for simultaneously opening and closing said outlets.

20. An incubator comprising a casing having a hatching chamber and a heated chamber, the bottom floor of the casing forming the bottom of the heated chamber, means above said floor for heating the air in said heated chamber, means for distributing the heated air in the heated chamber to the hatching chamber, and an auxiliary brooder arranged below said casing and comprising an open top box supported from the casing and closed at the top by said floor thereof, substantially as described.

21. An incubator comprising a casing having a hatching chamber and a heated chamber, means for maintaining a circulation of heated air from the heated chamber to and through the hatching chamber, and means for heating air in said heated chamber comprising elongated main and return heating flues arranged longitudinally within said heated chamber and closed from communication therewith, s
its products into
flue, said return fl
said products from
flue and at its ou
discharge above th
said lamp, and su
therefrom, for the
set forth.

22. Chicken cul
a casing having
means to maintain
through and there
ing air in said cha
main and return he
in, and means to
into the receiving
return flue at its
and receiving said
end of the main f
having a vertical
the receiving end
said main flue and
to the heat thereo
vertical flow of air
chimney, substanti

23. An incubat
having a heated ch
let and a hatching
arranged in said h
the air therein, me
from the heated
chamber, a heating
its products into s
charge chimney fr
discharge pipe fro
into said discharge

24. An incubat
having a hatching
chamber, means f
comprising a heati
and projecting at o
rior of the casing
said flue at its proj
ceive the heated pr
and at said end h
adapted to reduce
flue by directly di
without passing th
within said heated
ing heated air from
the hatching cham
circulation of air th
heated air direct di
chamber to the ext
mostatic controlled
closing said direct
and said direct dis
chamber, substantia

25. In chicken cu
having a chamber t
means therefor comp
said chamber and at
receive the heated p
return flue at its

pening into said hood,
antially as described.
a casing having a
an elongated heating
ally in said chamber,
flue having a bottom
adapted to discharge
into said flue and
ereof, an elongated re-
end communicating
said heating flue, and
a vertically disposed
ed over the outer end
der which the heating
aving a contracted top
ereby the heat radi-
id lamp and through
upward draft through

e apparatus, a heating
elongated horizontally
rn flues communicat-
s to carry the heated
ain flue and from the
k through the return
outer end adapted to
ducts from a heating
the same, the return
ide the main flue and
ening at its outer end
heated products, and
said discharge and
y said lamp for main-
hrough said main and
ough said discharge.
apparatus having, a
a heating flue therein
ated products from a
aving a vertical dis-
discharge pipe from
irect to the exterior of
normally closing said
led mechanism for ac-
open said pipe.
apparatus having, a
and a hatching cham-
t, said first mentioned
h air supply, a heated
said chambers, a nor-
outlet from said cham-
means for opening said
es substantially as de-

apparatus having, a
ng a fresh air inlet, a
ving an outlet, a pas-
m the heated chamber
mber, a direct outlet
hamber to the atmos-
chambers, a damper
pipe, and thermostat
opening said damper,
eing controlled by the
tching chamber.
comprising a casing having a hatching chamber and a heated chamber, means for heating the heated chamber comprising a heating flue adapted to receive the heated products of a heating lamp and having a vertical discharge, means being provided to normally permit circulation of fresh air into and through the heated chamber, and therefrom into and through the hatching chamber, said means comprising a discharge duct from the hatching chamber into said vertical discharge, normally closed means for discharging the heated products direct from said flue without passing the same therethrough, normally closed means for discharging heated air direct from said heated chamber to stop the normal circulation from the heated chamber to the hatching chamber, and a thermostatic regulator for opening and closing said two last mentioned means.

13. Chicken culture apparatus having, a chamber to be heated, heating flues therein comprising a main flue and a return flue having a discharge at its outer end, said flues communicating at their inner ends to carry the heated products throughout the lengths thereof, said main flue adapted to receive at its outer end the heated products of a heating lamp and having a direct vertical discharge pipe opening through the top wall of its outer end, a direct air outlet pipe from said chamber having its upper outlet end arranged within the upper outlet end of said discharge pipe, a single damper normally closing the upper ends of said two pipes, and thermostat actuating means for moving said damper to open said pipes.

14. An incubator having a hatching chamber and a heated chamber provided with a direct air outlet with a vertical discharge end, means for heating said discharge end to accelerate the discharge therefrom, thermostatic-controlled means normally closing said outlet, and means to normally maintain a constant circulation of fresh air into and through the heated chamber and therefrom into and through the hatching chamber and discharging therefrom, substantially as described.

15. An incubator comprising a casing having a horizontally disposed heated chamber arranged longitudinally thereof, and a longitudinally disposed hatching chamber arranged above the heated chamber, said casing at its rear end provided with a vertical duct from the upper portion of the heated chamber to the upper portion of the rear end of the hatching chamber, the hatching chamber at its front end provided with a heated air outlet, a heating drum arranged longitudinally within the heated chamber and projecting therefrom at the front end of the casing, said heated chamber having a fresh air inlet at its front end, the projecting front end of said drum adapted to

receive the heated products of a heating lamp and provided with a vertical discharge, said front end of the heated chamber having a direct discharge passage to the exterior thereof, and thermostatic controlled means normally closing said discharge.

16. An incubator having a hatching chamber, heating means, and a removable water tank heated by said means and having top openings into the hatching chamber and provided with means for varying the dimensions of said openings to vary the amount of vapor discharged into the hatching chamber.

17. An incubator having a heated chamber having an air inlet, a hatching chamber, having an air outlet, flues for passing heated air from the heated chamber into the hatching chamber and a removable water tank forming the division or partition between said chambers and open into said hatching chamber.

18. An incubator having a hatching chamber, a heated chamber, a heating flue arranged longitudinally and removably in the heated chamber and projecting to the exterior thereof to receive a heating lamp, and means within the heated chamber removably supporting said flue within said chamber.

19. An incubator having a casing with a heated chamber and a hatching chamber, the heated chamber having an air inlet and the hatching chamber an air outlet, means for passing heated air from the heated chamber into the hatching chamber, means for heating air in the heated chamber, and temperature controlling means embodying a normally closed direct outlet from the heated chamber to the exterior of the casing, and a normally closed direct outlet for reducing the temperature of said air heating means and a thermostatic regulator for simultaneously opening and closing said outlets.

20. An incubator comprising a casing having a hatching chamber and a heated chamber, the bottom floor of the casing forming the bottom of the heated chamber, means above said floor for heating the air in said heated chamber, means for distributing the heated air in the heated chamber to the hatching chamber, and an auxiliary brooder arranged below said casing and comprising an open top box supported from the casing and closed at the top by said floor thereof, substantially as described.

21. An incubator comprising a casing having a hatching chamber and a heated chamber, means for maintaining a circulation of heated air from the heated chamber to and through the hatching chamber, and means for heating air in said heated chamber comprising elongated main and return heating flues arranged longitudinally within said heated chamber and closed from communication therewith, a heating lamp to discharge its products into the inlet end of said main flue, said return flue at its inlet end receiving said products from the outlet end of the main flue and at its outlet end having a vertical discharge above the plane of and adjacent to said lamp, and subject to the heat radiated therefrom, for the purposes substantially as set forth.

22. Chicken culture apparatus comprising a casing having an air heated chamber, means to maintain a circulation of air therethrough and therefrom, and means for heating air in said chamber comprising elongated main and return heating flues arranged therein, and means to discharge heated products into the receiving end of the main flue, said return flue at its receiving end opening into and receiving said products from the outlet end of the main flue and at its outlet end having a vertical discharge chimney above the receiving end of and closely adjacent to said main flue and said means and subject to the heat thereof to cause acceleration of vertical flow of air and products through said chimney, substantially as described.

23. An incubator comprising a casing having a heated chamber with a fresh air inlet and a hatching chamber, a heating drum arranged in said heated chamber for heating the air therein, means for passing heated air from the heated chamber to the hatching chamber, a heating lamp adapted to discharge its products into said drum, a vertical discharge chimney from said drum, and an air discharge pipe from said hatching chamber into said discharge chimney.

24. An incubator comprising a casing having a hatching chamber and a heated chamber, means for heating said chamber comprising a heating flue arranged therein and projecting at one end thereof at the exterior of the casing and having a discharge, said flue at its projecting end adapted to receive the heated products of a heating lamp and at said end having a direct discharge adapted to reduce the temperature of the flue by directly discharging said products without passing the same through the flue within said heated chamber, means for passing heated air from the heated chamber to the hatching chamber and for permitting circulation of air through said chambers, a heated air direct discharge from the heated chamber to the exterior thereof, and thermostatic controlled means for opening and closing said direct discharge from the flue and said direct discharge from the heated chamber, substantially as described.

25. In chicken culture apparatus, a casing having a chamber to be heated, and heating means therefor comprising a flue arranged in said chamber and at its inlet end adapted to receive the heated products from a lamp, a return flue at its inlet end receiving the

heated products from the outlet end of said flue and at its outlet end having a vertical discharge chimney, and a vertical pipe arranged within said discharge chimney and normally closed at its upper end and at its lower end opening into the inlet end of said flue, substantially as described.

26. In chicken culture apparatus, a casing having a chamber to be heated, heating means therefor comprising a flue arranged longitudinally within said chamber and at its inlet end adapted to receive the heated products from a lamp, a return flue arranged longitudinally within said chamber and at its inlet end receiving said products from the outlet end of said flue, a vertical discharge chimney mounted on and rising from the inlet end of said flue, said return flue at its outlet end discharging into said chimney, said chimney being closed at its lower end from the inlet end of said flue.

27. In chicken culture apparatus, a chamber to be heated, heating means therefor comprising a flue arranged therein, and at its inlet end adapted to receive heated products, a return flue receiving the heated products from the outlet end of said flue, a vertical discharge chimney open at the upper end and receiving the heated products from the outlet end of said return flue, and a direct air discharge pipe from the interior of said chamber having a vertical discharge end arranged within said chimney and normally closed at the top.

28. An incubator comprising a casing having a heated chamber and a hatching chamber, a flue arranged in the heated chamber for heating the air therein and having its receiving end at the exterior of the casing and adapted to receive the heated products of a heating lamp and having a vertical discharge at the exterior of the casing, means for permitting circulation of air into and through the heated chamber and therefrom into and through the hatching chamber comprising an air discharge duct from the hatching chamber into said discharge, a direct normally closed discharge from the receiving end of said heating flue, a direct discharge from the heated chamber to the exterior thereof, and thermostatic means for opening and closing said direct discharge from the flue and said direct discharge from the heated chamber.

In testimony whereof I affix my signature, in presence of two witnesses.

VIRGIL C. KOONS.

Witnesses:
J. C. SPICER,
B. B. IRELAND.

852 (Defendants' Exhibit P, Letters Patent N
J. H. Klinke, February 15, 1910.)

outlet end of said
having a vertical
vertical pipe ar-
rge chimney and
r end and at its
inlet end of said
bed.

pparatus, a casing
heated, heating
g a flue arranged
chamber and at its
ceive the heated
turn flue arranged
chamber and at its
roducts from the
vertical discharge
l rising from the
return flue at its
to said chimney,
at its lower end
flue.

pparatus, a cham-
g means therefor
therein, and at its
e heated products,
e heated products
id flue, a vertical
the upper end and
cts from the outlet
nd a direct air dis-
charge pipe from the interior of said chamber having a vertical discharge end arranged within said chimney and normally closed at the top.

28. An incubator comprising a casing having a heated chamber and a hatching chamber, a flue arranged in the heated chamber for heating the air therein and having its receiving end at the exterior of the casing and adapted to receive the heated products of a heating lamp and having a vertical discharge at the exterior of the casing, means for permitting circulation of air into and through the heated chamber and therefrom into and through the hatching chamber comprising an air discharge duct from the hatching chamber into said discharge, a direct normally closed discharge from the receiving end of said heating flue, a direct discharge from the heated chamber to the exterior thereof, and thermostatic means for opening and closing said direct discharge from the flue and said direct discharge from the heated chamber.

In testimony whereof I affix my signature, in presence of two witnesses.

VIRGIL C. KOONS.

Witnesses:
J. C. SPICER,
B. B. IRELAND.

852 (Defendants' Exhibit P, Letters Patent No. 949,653 to J. H. Klinke, February 15, 1910.)

706

J. H. KLINKE.

INCUBATOR.

APPLICATION FILED JAN. 21, 1908.

949,653.

Patented Feb. 15, 1910.

2 SHEETS—SHEET 2.

FIG. 3

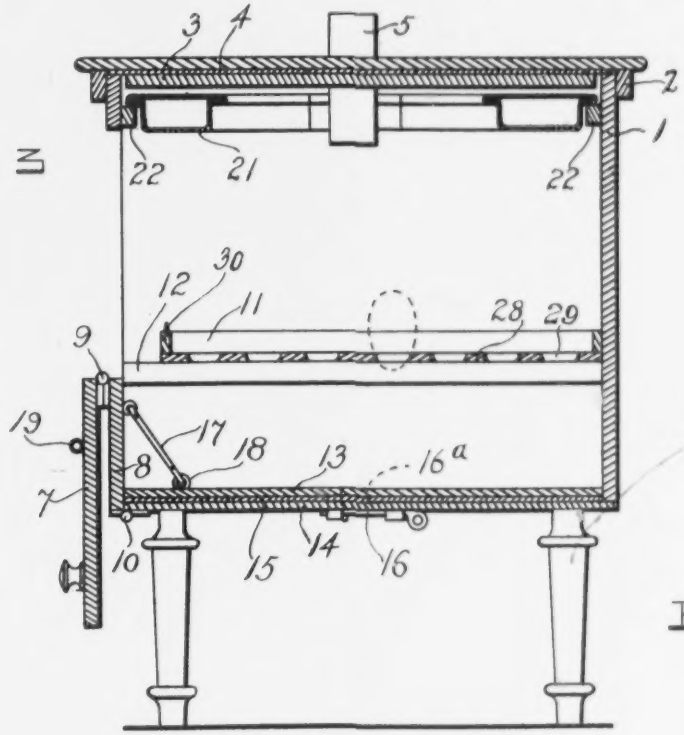

FIG. 5

FIG. 4

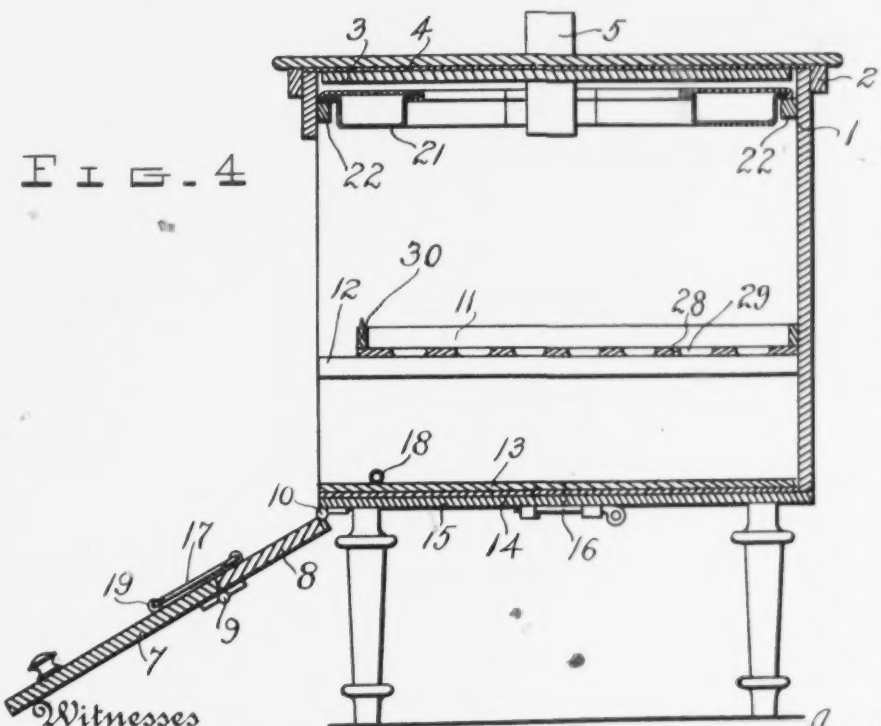

Witnesses

B. J. Crawford.

Edwin Guthrie.

Inventor

Joseph H. Klinke.

By James H. Spalding.

Attorney

708

J. H. KLINKE.

INCUBATOR.

APPLICATION FILED JAN. 21, 1908.

949,653.

Patented Feb. 15, 1910.

2 SHEETS—SHEET 1.

FIG. 1

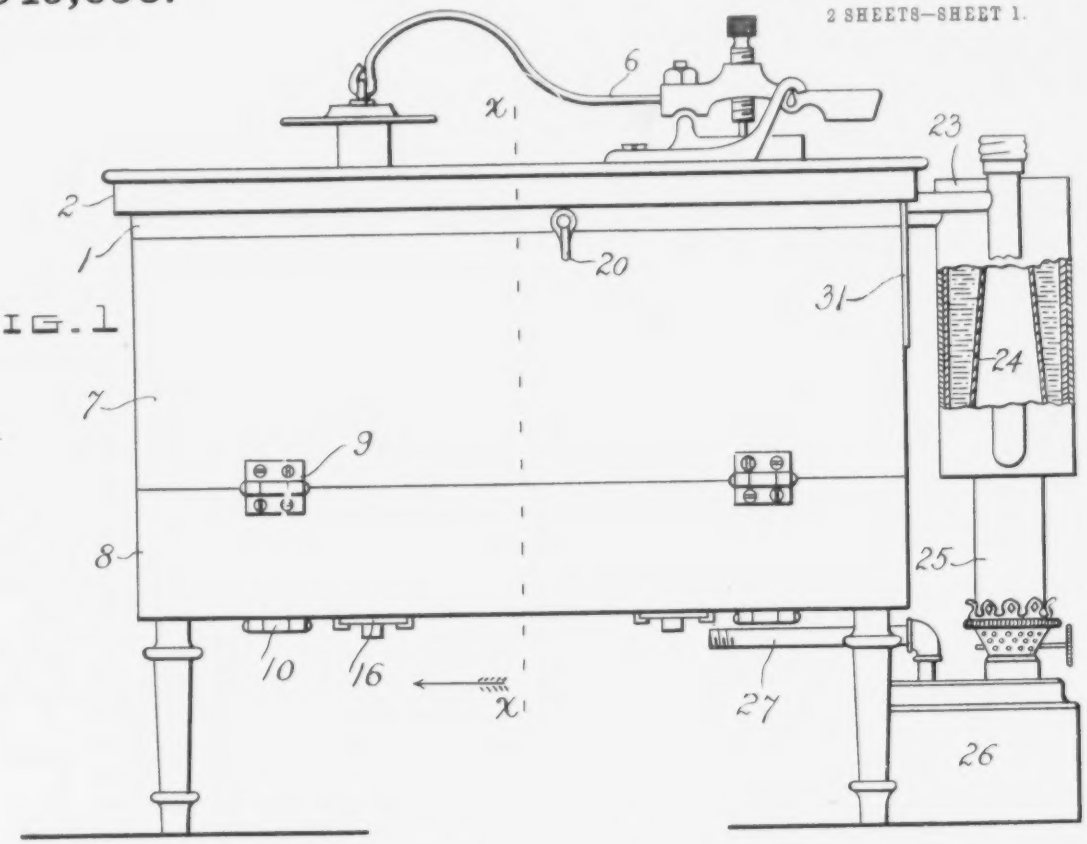

FIG. 2

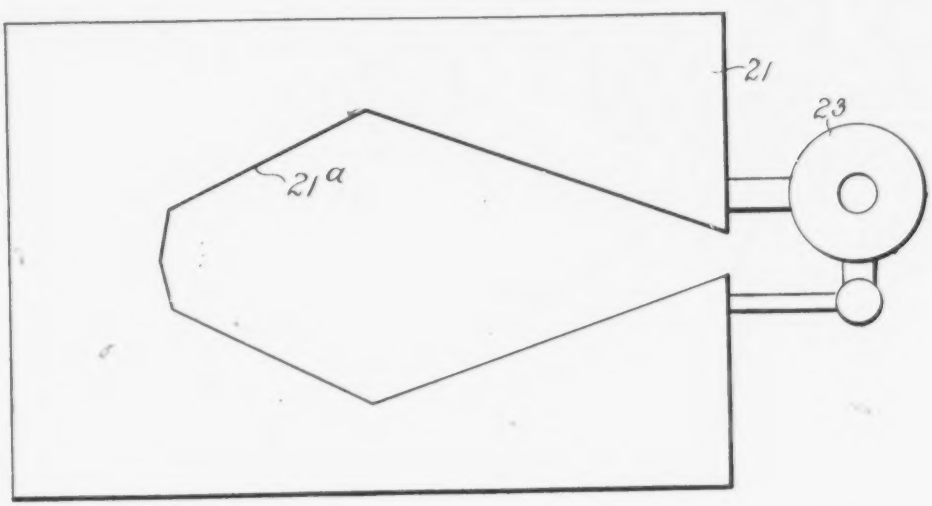

Witnesses
Ed Crawford
Edwin Guthrie

Inventor
Joseph H. Klinke.
By James H. Spalding.
Attorney

UNITED STATES PATENT

JOSEPH H. KLINKE, OF BRIGHTON, ILLINO

INCUBATOR.

949,653. Specification of Letters Patent. Pat

Application filed January 21, 1908. Serial No. 411,9

To all whom it may concern:

Be it known that I, JOSEPH H. KLINKE, citizen of the United States, residing at Brighton, in the county of Macoupin and State of Illinois, have invented certain new and useful Improvements in Incubators, of which the following is a specification.

My invention relates to incubators, and has for its object the production of a device for hatching chickens having special construction and arrangement of parts, whereby it is believed that the hatching operation may be more conveniently and economically carried out, with less consumption of fuel, and with better control of the heat, also with superior distribution of the heat, than in such devices now on the market with which I am familiar.

The special construction and arrangement constituting this invention is set forth in the accompanying drawings, of which—

Figure 1 represents a side view of the whole. Fig. 2 is a top plan view of the hot water heating tank. Fig. 3 is a cross-section on line *x*—*x* of Fig. 1 showing the upper division of the front door open, and the lower division closed. Fig. 4 is also a cross-section on line *x*—*x* of Fig. 1 showing the two divisions of the front door secured together and in their open position. Fig. 5 represents one of the hooks employed to secure and connect the divisions of the front door.

Like numerals are used to designate like parts throughout the specification and drawings.

The casing 1 has a removable top 2, which has an inner board 3, and between the top and the board 3 is arranged a sheet of asbestos or the like 4, to retain heat. Hot air escapes from the casing by way of the pipe 5 through the top 2, and the outlet is governed by any chosen damper or cover and operating mechanism 6.

The front of the casing has an opening closed by a door comprising two divisions. The uppermost and larger division is marked 7 and the lower division is referred to by the numeral 8. The two divisions are pivotally connected by hinges 9, and the lower division is in like manner secured to casing 1 by hinges 10.

The egg tray is marked 11. It slides in and out upon guiding supports 12, and, there will be noted an interval between the front edge of the tray and the front of the casing. In other words, the tray is not quite so wide as the interior of th of the interior cont closed by the upper door. Below the eg chamber wherein th are suitably protect posure to varying te of the casing consist the sheet of asbestos 15. It is my practice per 16, or more than tures 16ª through the admit fresh air in q varying conditions.

When the lower di occupies the position is secured by the en 17 with the eyes 18 i When, however, it is tire front and have front door act as caused to engage the in Fig. 4. The fron closed position by t Fig. 1.

The form of the h shown in Fig. 2, as 21ª therein is an im invention, experience ticular shape of the portant bearing upo tion of heat from t temperature through delay and constan opening 21ª is narr wider between the en greater bodies of hot the egg chamber, thus ume of heat at the co ported upon the clea the tank is the heate ing interior 24 direct ucts of combustion chimney 25 from la vided the body or bo pipe 27, which is us sired to connect the oil.

The egg tray 11, h vided with holes 29 to sition indicated, and t slide in and out on t as described. In Fig noted that the front 3 a little distance back 12 leaving a space b

J. H. KLINKE.

INCUBATOR.

APPLICATION FILED JAN. 21, 1908.

Patented Feb. 15, 1910.

2 SHEETS—SHEET 1.

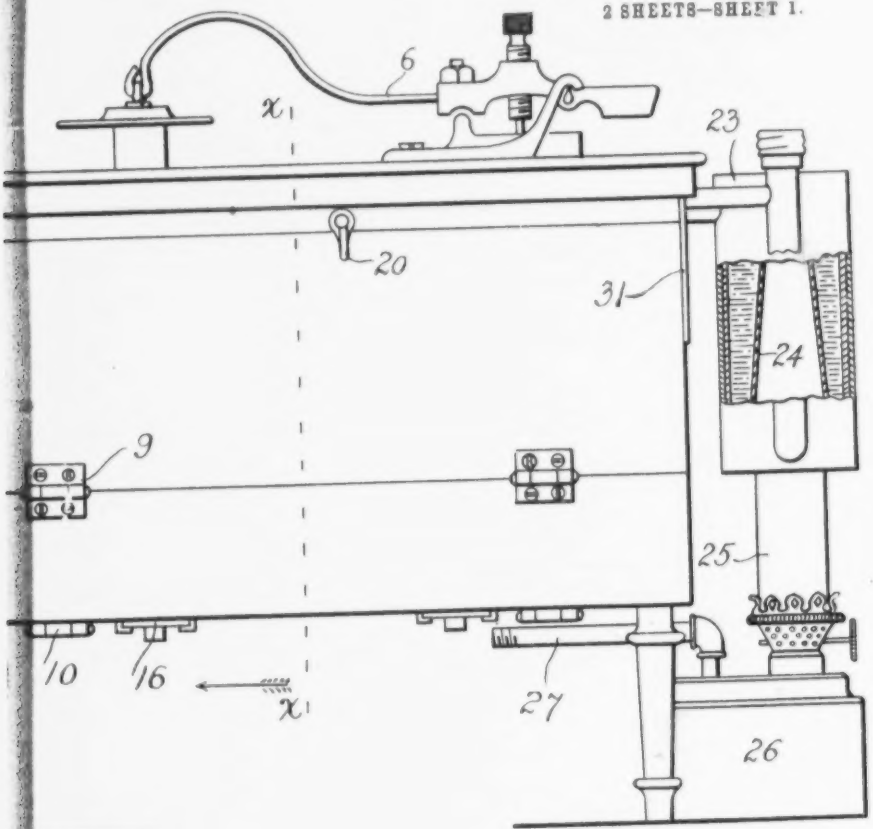

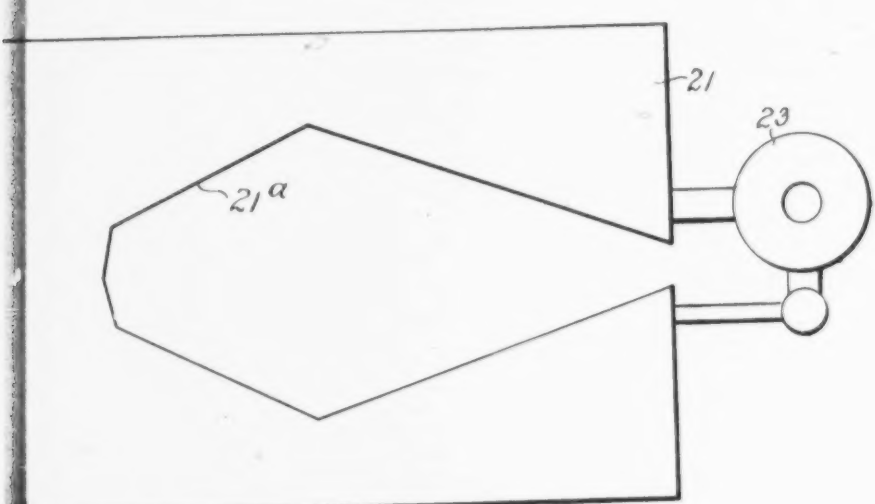

Inventor

Joseph H. Klinke.

By James H. Spalding.

Attorney

Price

UNITED STATES PATENT OFFICE.

JOSEPH H. KLINKE, OF BRIGHTON, ILLINOIS.

INCUBATOR.

949,653. Specification of Letters Patent. Patented Feb. 15, 1910.

Application filed January 21, 1908. Serial No. 411,837.

To all whom it may concern:

Be it known that I, JOSEPH H. KLINKE, citizen of the United States, residing at Brighton, in the county of Macoupin and State of Illinois, have invented certain new and useful Improvements in Incubators, of which the following is a specification.

My invention relates to incubators, and has for its object the production of a device for hatching chickens having special construction and arrangement of parts, whereby it is believed that the hatching operation may be more conveniently and economically carried out, with less consumption of fuel, and with better control of the heat, also with superior distribution of the heat, than in such devices now on the market with which I am familiar.

The special construction and arrangement constituting this invention is set forth in the accompanying drawings, of which—

Figure 1 represents a side view of the whole. Fig. 2 is a top plan view of the hot water heating tank. Fig. 3 is a cross-section on line *x*—*x* of Fig. 1 showing the upper division of the front door open, and the lower division closed. Fig. 4 is also a cross-section on line *x*—*x* of Fig. 1 showing the two divisions of the front door secured together and in their open position. Fig. 5 represents one of the hooks employed to secure and connect the divisions of the front door.

Like numerals are used to designate like parts throughout the specification and drawings.

The casing 1 has a removable top 2, which has an inner board 3, and between the top and the board 3 is arranged a sheet of asbestos or the like 4, to retain heat. Hot air escapes from the casing by way of the pipe 5 through the top 2, and the outlet is governed by any chosen damper or cover and operating mechanism 6.

The front of the casing has an opening closed by a door comprising two divisions. The uppermost and larger division is marked 7 and the lower division is referred to by the numeral 8. The two divisions are pivotally connected by hinges 9, and the lower division is in like manner secured to casing 1 by hinges 10.

The egg tray is marked 11. It slides in and out upon guiding supports 12, and, there will be noted an interval between the front edge of the tray and the front of the casing. In other words, the tray is not quite so wide as the interior of the casing. That portion of the interior containing the egg tray is closed by the upper division 7 of the front door. Below the egg tray is the hover or chamber wherein the newly hatched chicks are suitably protected against sudden exposure to varying temperature. The bottom of the casing consists of the inner board 13, the sheet of asbestos 14, and the outer board 15. It is my practice to provide a slide damper 16, or more than one, that governs apertures 16^a through the bottom of the casing to admit fresh air in quantities desired under varying conditions.

When the lower division of the front door occupies the position illustrated in Fig. 3, it is secured by the engagement of the hooks 17 with the eyes 18 in the floor of the hover. When, however, it is desired to open the entire front and have the two divisions of the front door act as one, the hooks 17 are caused to engage the eyes 19, as illustrated in Fig. 4. The front door is secured in its closed position by the button 20 shown in Fig. 1.

The form of the hot water tank 21 is best shown in Fig. 2, as the kite-shaped opening 21^a therein is an important feature of my invention, experience having shown the particular shape of the opening to have an important bearing upon the desired distribution of heat from the tank, whereby even temperature throughout is attained without delay and constantly maintained. The opening 21^a is narrower at the ends and wider between the ends, thereby locating the greater bodies of hot water at the corners of the egg chamber, thus creating a greater volume of heat at the corners. The tank is supported upon the cleats 22. Connected with the tank is the heater 23, having the tapering interior 24 directly heated by the products of combustion arising through the chimney 25 from lamp 26. I have provided the body or bowl of the lamp with a pipe 27, which is used whenever it is desired to connect the lamp with a source of oil.

The egg tray 11, has its bottom 28 provided with holes 29 to hold the eggs in the position indicated, and the tray is arranged to slide in and out on the supporting rails 12 as described. In Figs. 3 and 4 it will be noted that the front 30 of the tray is located a little distance back of the end of the rail 12 leaving a space by way of which the

lower chamber is ventilated. It will be observed also that the tray slides out above the lower part 8 of the front door when that part is closed, and it is not necessary to lower the division 8 of the door and thus open the lower chamber in front and perhaps cool it too suddenly or too much.

It is desirable as a protection against the heat from the heater 23 to attach a metal plate 31 to the outside of the casing adjacent to the heater as shown.

In operating my invention, the egg tray may be easily reached by letting down the division 7 of the front door, during which time the chamber below the tray, closed by the division 8 of the front door, is kept closed and no material change in its temperature takes place.

Having now described my invention, and explained the mode of its operation, what I claim is—

1. In an incubator, the combination with the casing having a front opening, of a front door arranged to close the said opening and comprising two divisions pivotally secured to each other, the lower division being also pivotally secured to the casing, means for securing the said upper division in its closed position, and detachable engaging devices comprising a member connected with the said casing and a like member connected with the upper division of said front door, said devices comprising also a movable member connected with the lower division of said front door and adapted to be engaged with either of the two said like members whereby the said lower division may be held closed or said upper and lower divisions secured together and movable as one, substantially as described.

2. In an incubator, the combination with the casing having a front opening, of a front door arranged to close the said opening and comprising two divisions pivotally secured to each other, the lower division being also pivotally secured to the casing, an egg tray having less width than the interior of the said casing, the said tray being removable and arranged to slide in and out above the upper edge of the said lower division of the front door, means for securing the said upper division in its closed position, and detachable engaging devices comprising a member connected with the said casing and a like member connected with the upper division of said front door, said devices comprising also a movable member connected with the lower division of said front door and adapted to be engaged with either of the two said like members whereby the said lower division may be held closed or said upper and lower divisions secured together and movable as one, substantially as described.

3. In an incubator, the combination with the casing having a front opening, of a front door arranged to close the said opening and comprising two divisions pivotally secured to each other, the lower division being also pivotally secured to the casing, an egg tray, the said tray being removable and arranged to slide in and out above the upper edge of the said lower division of the front door, means for securing the said upper division in its closed position, and detachable engaging devices comprising a member connected with the said casing and a like member connected with the upper division of said front door, said devices comprising also a movable member connected with the lower division of said front door and adapted to be engaged with either of the two said like members whereby the said lower division may be held closed or said upper and lower divisions secured together and movable as one, substantially as described.

In testimony whereof I affix my signature in presence of two witnesses.

JOSEPH H. KLINKE.

Witnesses:
FRANK W. LAUCK,
ARNOLD A. BOTT.

858 (Defendants' Exhibit P, Letters Patent No. to J. O. Olson, June 16, 1914.)

amber is ventilated. It will be ob-
lso that the tray slides out above
r part 8 of the front door when
is closed, and it is not necessary
the division 8 of the door and thus
lower chamber in front and per-
it too suddenly or too much.
esirable as a protection against the
n the heater 23 to attach a metal
to the outside of the casing adja-
he heater as shown.
rating my invention, the egg tray
asily reached by letting down the
7 of the front door, during which
chamber below the tray, closed by
ion 8 of the front door, is kept
d no material change in its tem-
takes place.
now described my invention, and
the mode of its operation, what I

n incubator, the combination with
g having a front opening, of a
r arranged to close the said open-
omprising two divisions pivotally
o each other, the lower division
pivotally secured to the casing,
securing the said upper division
sed position, and detachable en-
evices comprising a member con-
h the said casing and a like mem-
cted with the upper division of
door, said devices comprising also
member connected with the lower
f said front door and adapted to
d with either of the two said like
whereby the said lower division
ld closed or said upper and lower
secured together and movable as
ntially as described.
incubator, the combination with
having a front opening, of a front
nged to close the said opening and
two divisions pivotally secured
her, the lower division being also
secured to the casing, an egg tray having less width than the interior of the said casing, the said tray being removable and arranged to slide in and out above the upper edge of the said lower division of the front door, means for securing the said upper division in its closed position, and detachable engaging devices comprising a member connected with the said casing and a like member connected with the upper division of said front door, said devices comprising also a movable member connected with the lower division of said front door and adapted to be engaged with either of the two said like members whereby the said lower division may be held closed or said upper and lower divisions secured together and movable as one, substantially as described.

3. In an incubator, the combination with the casing having a front opening, of a front door arranged to close the said opening and comprising two divisions pivotally secured to each other, the lower division being also pivotally secured to the casing, an egg tray, the said tray being removable and arranged to slide in and out above the upper edge of the said lower division of the front door, means for securing the said upper division in its closed position, and detachable engaging devices comprising a member connected with the said casing and a like member connected with the upper division of said front door, said devices comprising also a movable member connected with the lower division of said front door and adapted to be engaged with either of the two said like members whereby the said lower division may be held closed or said upper and lower divisions secured together and movable as one, substantially as described.

In testimony whereof I affix my signature in presence of two witnesses.

JOSEPH H. KLINKE.

Witnesses:
FRANK W. LAUCK,
ARNOLD A. BOTT.

858 (Defendants' Exhibit P, Letters Patent No. 1,100,146 to J. O. Olson, June 16, 1914.)

J. O. OLSON.

INCUBATOR.

APPLICATION FILED MAR. 27, 1912.

1,100,146. Patented June 16, 1914.

Fig. 1.

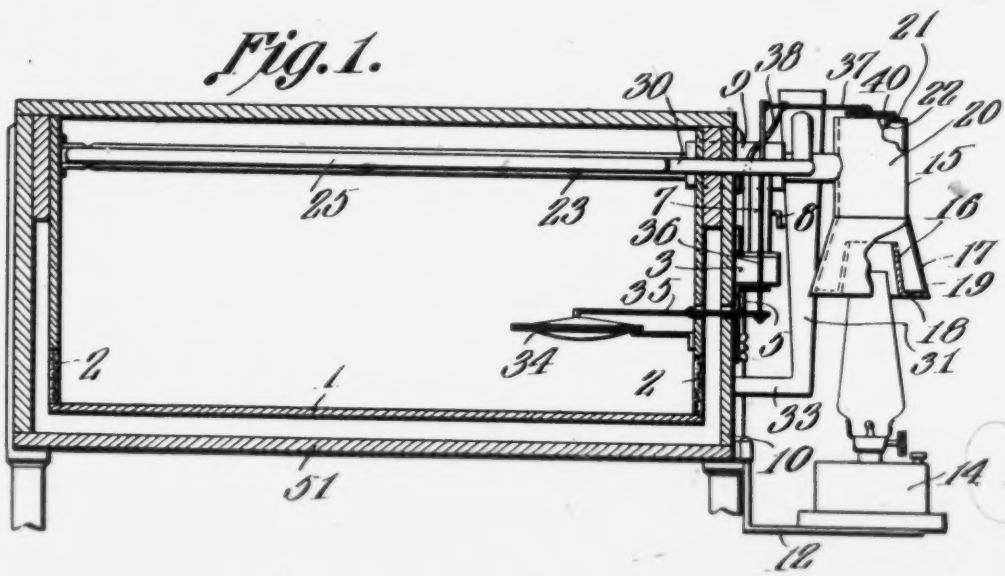

Fig. 2.

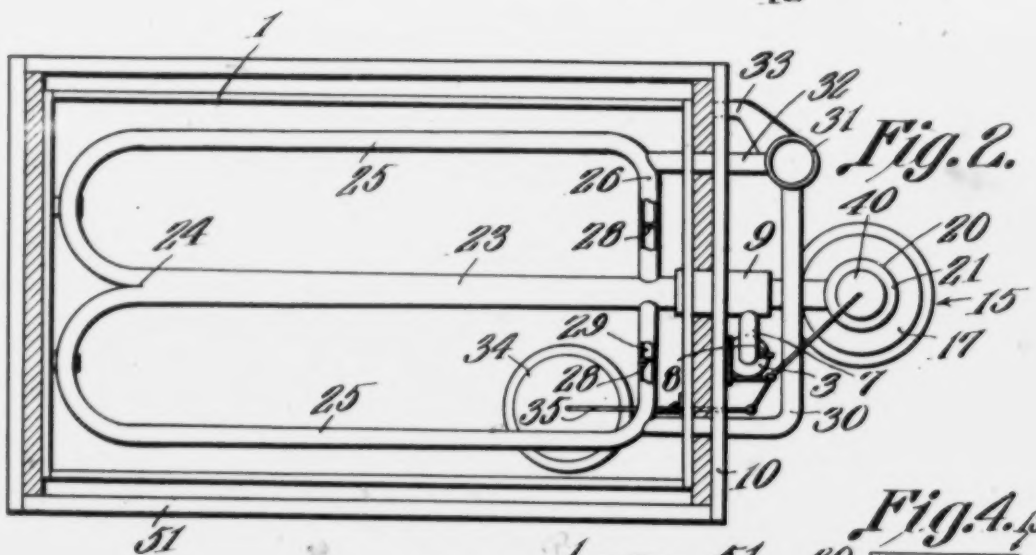

Fig. 4.

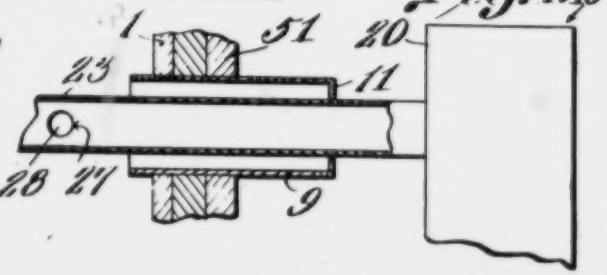

Fig. 3.

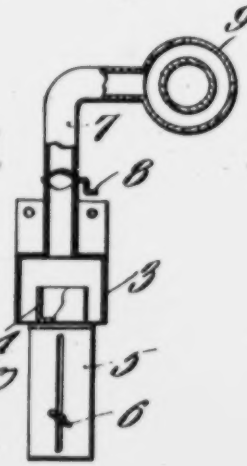

Witnesses

J. P. Tomlin

L. H. Wilson

John O. Olson,
Inventor

by C. A. Snow & Co.
Attorneys

UNITED STATES PATENT

JOHN O. OLSON, OF RED WING, MINNESOTA.

INCUBATOR.

1,100,146. Specification of Letters Patent. Paten

Application filed March 27, 1912. Serial No. 686,607.

To all whom it may concern:

Be it known that I, JOHN O. OLSON, a citizen of the United States, residing at Red Wing, in the county of Goodhue and State of Minnesota, have invented a new and useful Incubator, of which the following is a specification.

The object of this invention is to provide a novel form of moistening device, and, specifically, to provide means whereby the capacity of a moistening chamber may be regulated and adjusted.

With the foregoing and other objects in view, which will appear as the description proceeds, the invention resides in the combination and arrangement of parts and in the details of construction hereinafter described and claimed, it being understood that changes in the precise embodiment of the invention herein disclosed can be made within the scope of what is claimed without departing from the spirit of the invention.

In the accompanying drawings—Figure 1 shows the invention in vertical longitudinal section, parts appearing in elevation; Fig. 2 is a top plan, the lid of the outer case being removed; Fig. 3 is a sectional detail of the moistening mechanism and attending parts; and Fig. 4 is a fragmental vertical section showing the means whereby the sections of the pipes are assembled with the cases.

In carrying out the invention there is provided an inner case 1, having outlets 2, securing a ventilation of the case. The case 1 is surrounded by an outer case 51. To one end 10 of the outer case 51 is secured a hood 3, within which is supported a water cup 4, in any desired manner. In the present instance, the water cup 4 is upheld by an angle bracket 5, adjustably secured to the end wall 10 of the case 51 by means of a clamp and slot connection 6, permitting a lowering of the bracket 5, so that the cup 4 may be inserted into and be removed from the hood 3. The upper end of the hood 3 is closed, and is entered by an air supply pipe 7, provided with a damper 8. A tubular sleeve 9 is inserted through the end walls of the cases 1 and 51, the outer end of the sleeve 9 being closed as shown at 11. The air supply pipe 7 enters one side of the sleeve 9.

Supported by a bracket 12 is a lamp 14, the chimney of which enters a heating drum, denoted generally by the numeral 15. The

and an outer wall 17, 18 in which there are The upper end of the nected with the cylin the drum, the same h vided with a draft out

A hot air delivery p of the cylindrical por and passes inwardly 11 of the sleeve 9, the ing an indraft of air pipe and the sleeve. extends along the long case 1, substantially t case, the pipe 23 diver to form a pair of retur turn bends 25 termina which enter the delive its initial end, as indi the interior of the port bends, imperforate par partitions being located pipe 23 and the extrem return bends 25. Thus the portions 26 of the r chambers 29 which co delivery pipe 23 adjac

The portions 30 an bends enter an uprigh 31, the wider end of wh posed, the narrower, lo pipe entering the case ing with the space betw 1 as shown at 33.

Located within the ca 34, operatively connect fulcrumed intermediate wall of the inner case an the end wall of the out end of the lever 35 is with a connection 36, co end to the lever 37, suppo 38, the free end of the a damper 40, positioned 22 in the top of the drum

In practical operation heat the drum 15 and drawn inwardly and up openings 19 in the botto air being heated by con face of the inner wall 1 15, the heated air will pipe 23, and traverse th thereof, the heated air p tremities 30 and 30 of th

J. O. OLSON.

INCUBATOR.

APPLICATION FILED MAR. 27, 1912.

Patented June 16, 1914.

Fig. 1.

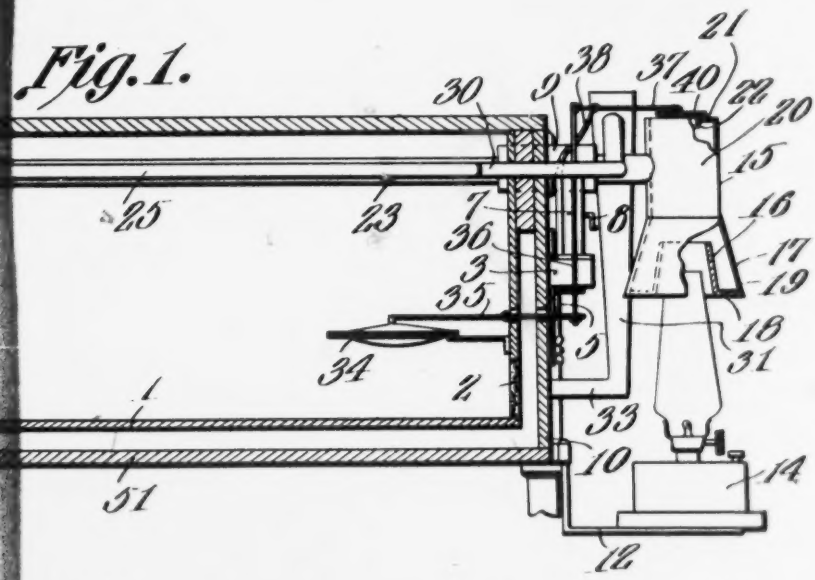

Fig. 2.

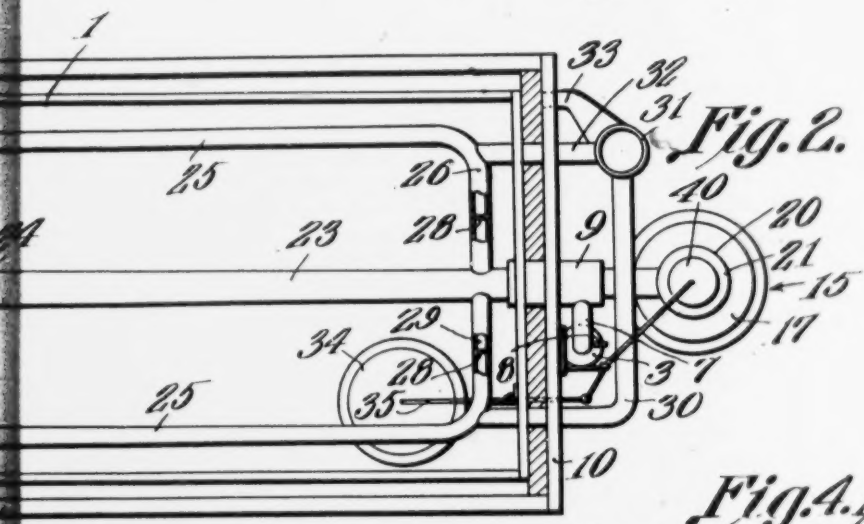

Fig. 4.

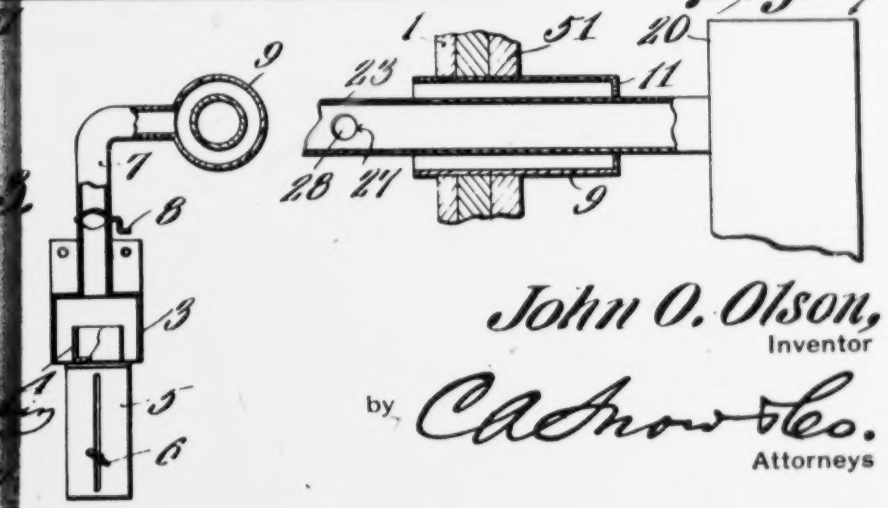

John O. Olson,
Inventor

by C. A. Snow & Co.
Attorneys

UNITED STATES PATENT OFFICE.

JOHN O. OLSON, OF RED WING, MINNESOTA.

INCUBATOR.

1,100,146. Specification of Letters Patent. Patented June 16, 1914.

Application filed March 27, 1912. Serial No. 686,607.

To all whom it may concern:

Be it known that I, JOHN O. OLSON, a citizen of the United States, residing at Red Wing, in the county of Goodhue and State of Minnesota, have invented a new and useful Incubator, of which the following is a specification.

The object of this invention is to provide a novel form of moistening device, and, specifically, to provide means whereby the capacity of a moistening chamber may be regulated and adjusted.

With the foregoing and other objects in view, which will appear as the description proceeds, the invention resides in the combination and arrangement of parts and in the details of construction hereinafter described and claimed, it being understood that changes in the precise embodiment of the invention herein disclosed can be made within the scope of what is claimed without departing from the spirit of the invention.

In the accompanying drawings—Figure 1 shows the invention in vertical longitudinal section, parts appearing in elevation; Fig. 2 is a top plan, the lid of the outer case being removed; Fig. 3 is a sectional detail of the moistening mechanism and attending parts; and Fig. 4 is a fragmental vertical section showing the means whereby the sections of the pipes are assembled with the cases.

In carrying out the invention there is provided an inner case 1, having outlets 2, securing a ventilation of the case. The case 1 is surrounded by an outer case 51. To one end 10 of the outer case 51 is secured a hood 3, within which is supported a water cup 4, in any desired manner. In the present instance, the water cup 4 is upheld by an angle bracket 5, adjustably secured to the end wall 10 of the case 51 by means of a clamp and slot connection 6, permitting a lowering of the bracket 5, so that the cup 4 may be inserted into and be removed from the hood 3. The upper end of the hood 3 is closed, and is entered by an air supply pipe 7, provided with a damper 8. A tubular sleeve 9 is inserted through the end walls of the cases 1 and 51, the outer end of the sleeve 9 being closed as shown at 11. The air supply pipe 7 enters one side of the sleeve 9.

Supported by a bracket 12 is a lamp 14, the chimney of which enters a heating drum, denoted generally by the numeral 15. The heating drum 15 includes an inner wall 16 and an outer wall 17, connected by a bottom 18 in which there are air inlet openings 19. The upper end of the outer wall 17 is connected with the cylindrical portion 20 of the drum, the same having a top 21, provided with a draft outlet opening 22.

A hot air delivery pipe 23 enters one side of the cylindrical portion 20 of the drum, and passes inwardly through the end wall 11 of the sleeve 9, the end wall 11 preventing an indraft of air between the delivery pipe and the sleeve. The delivery pipe 23 extends along the longitudinal center of the case 1, substantially the full length of the case, the pipe 23 diverging, as shown at 24, to form a pair of return bends 25. The return bends 25 terminate in connections 26 which enter the delivery pipe 23, adjacent its initial end, as indicated at 27. Across the interior of the portions 26 of the return bends, imperforate partitions 28 extend, the partitions being located between the delivery pipe 23 and the extremities 30 and 32 of the return bends 25. Thus there are formed in the portions 26 of the return bends, heating chambers 29 which communicate with the delivery pipe 23 adjacent its initial end.

The portions 30 and 32 of the return bends enter an upright tapered vent pipe 31, the wider end of which is upwardly disposed, the narrower, lower end of the vent pipe entering the case 51 and communicating with the space between the cases 51 and 1 as shown at 33.

Located within the case 1 is a thermostat 34, operatively connected with a lever 35, fulcrumed intermediate its ends in the end wall of the inner case and extending through the end wall of the outer case. The outer end of the lever 35 is operatively united with a connection 36, connected at its upper end to the lever 37, supported upon a bracket 38, the free end of the lever 37 supporting a damper 40, positioned above the opening 22 in the top of the drum 15.

In practical operation, the lamp 14 will heat the drum 15 and cause the air to be drawn inwardly and upwardly through the openings 19 in the bottom of the drum, the air being heated by contact with the outer face of the inner wall 16. From the drum 15, the heated air will enter the delivery pipe 23, and traverse the return bends 25 thereof, the heated air passing into the extremities 30 and 32 of the return bends, and thus entering the vent pipe 31. The heated

air entering the vent pipe 31 will traverse the same, causing a draft in the vent pipe, and creating a suction through the portion 33 of the vent pipe, whereby the foul air between the cases 1 and 51 will be withdrawn, the outlets 2 furnishing further communication with the interior of the case 1.

As the air traverses the delivery pipe 23, the temperature within the chambers 29 will be raised, causing a heating of the partitions 28, and causing a heating of the air which lies between the partitions and the portions 30 and 32 of the return bends. Therefore, the air as it passes from the return bends 25, into the portions 30 and 32 of the return bends, will be heated to some extent, before it enters the vent pipe 31. Since the air is thus heated, prior to entering the vent pipe 31, the draft through the vent pipe will be increased accordingly.

When the air within the case 1 is drawn outwardly through the openings 2 and beneath the case 1 through the vent pipe 31, in the manner hereinbefore described, fresh air will be drawn upwardly through the hood 3, about the water cup 4, the entering air being thus moistened. The air entering the hood 3 will traverse the pipe supply 7, controlled by the damper 8, and enter the sleeve 9, the outer end of which is closed. As the air enters the sleeve 9 it will come into contact with the initial end of the delivery pipe 23 and be heated, a supply of moist, fresh, heated air thus passing into the casing 1, through the open inner end of the sleeve 9.

The function of the thermostat 34 and the parts controlled thereby is common and well understood and needs no specific explanation.

Broadly considered, the present invention comprises, as shown in Fig. 3, an air supply pipe 7 which is open at one end to define a moistening chamber represented by the hood 3. A moistening device represented by the cup 4 is located in the chamber 3, and a support 5 for the cup is provided, the support being movable to shift the position of the cup in the chamber 3, thereby to vary the capacity of the chamber.

Having thus described the invention, what is claimed is:—

In a device of the class described, an air supply pipe open at one end to define a moistening chamber; a moistening device in the chamber; and a support for the moistening device, the support being movable to shift the position of the moistening device in the chamber thereby to vary the capacity of the chamber.

In testimony that I claim the foregoing as my own, I have hereto affixed my signature in the presence of two witnesses.

JOHN O. OLSON.

Witnesses:
CHAS. M. ANDERSON,
THOS. MOHN.

862 (Defendants' Exhibit P, Letters Patent No. 1
to G. E. Goldstein, May 4, 1915.)

31 will traverse
in the vent pipe,
rough the portion
by the foul air be-
ill be withdrawn,
rther communica-
e case 1.
delivery pipe 23,
the chambers 29
eating of the par-
a heating of the
he partitions and
the return bends.
asses from the re-
ortions 30 and 32
be heated to some
he vent pipe 31.
, prior to entering
through the vent
rdingly.
e case 1 is drawn
penings 2 and be-
the vent pipe 31,
e described, fresh
rdly through the
up 4, the entering
The air entering
the pipe supply 7,
8, and enter the
f which is closed.
ve 9 it will come
ial end of the de-
ated, a supply of
thus passing into
the casing 1, through the open inner end of the sleeve 9.

The function of the thermostat 34 and the parts controlled thereby is common and well understood and needs no specific explanation.

Broadly considered, the present invention comprises, as shown in Fig. 3, an air supply pipe 7 which is open at one end to define a moistening chamber represented by the hood 3. A moistening device represented by the cup 4 is located in the chamber 3, and a support 5 for the cup is provided, the support being movable to shift the position of the cup in the chamber 3, thereby to vary the capacity of the chamber.

Having thus described the invention, what is claimed is:—

In a device of the class described, an air supply pipe open at one end to define a moistening chamber; a moistening device in the chamber; and a support for the moistening device, the support being movable to shift the position of the moistening device in the chamber thereby to vary the capacity of the chamber.

In testimony that I claim the foregoing as my own, I have hereto affixed my signature in the presence of two witnesses.

JOHN O. OLSON.

Witnesses:
CHAS. M. ANDERSON,
THOS. MOHN.

862 (Defendants' Exhibit P, Letters Patent No. 1,137,752 to G. E. Goldstein, May 4, 1915.)

716

G. E. GOLDSTEIN.

APPARATUS FOR CURING OR ARTIFICIALLY AGING CIGARS.

APPLICATION FILED JUNE 20, 1914.

1,137,752.

Patented May 4, 1915.

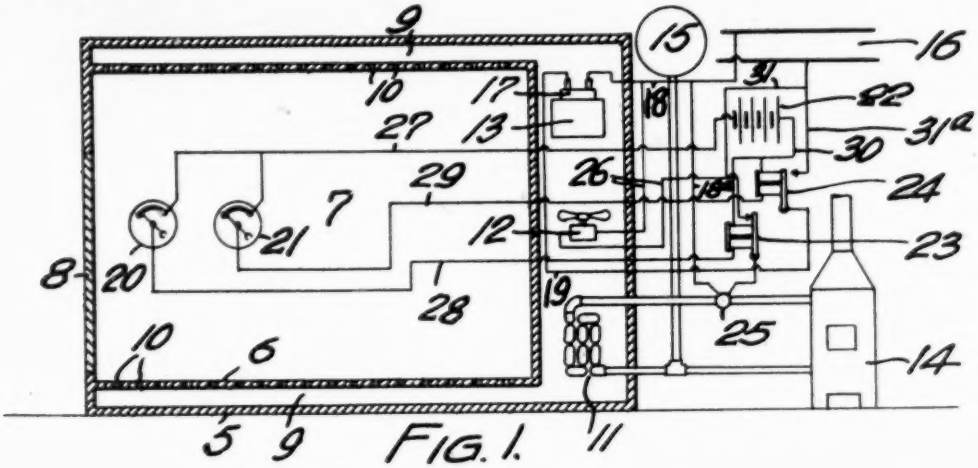

FIG. 1.

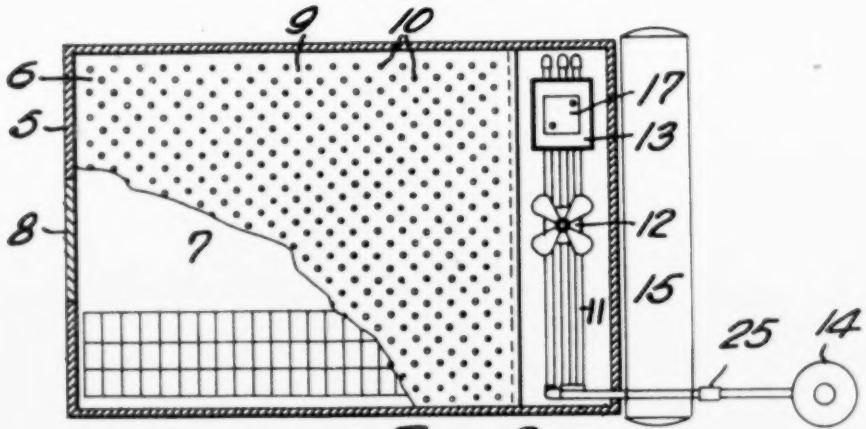

FIG. 2.

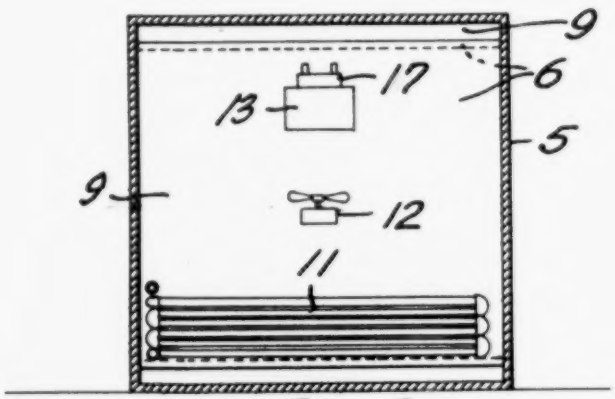

FIG. 3.

Witnesses

S. M. Allen

J. R. Moreland

Inventor

G. E. Goldstein

By Fitzgerald, Brooks & Co

His Attorneys

UNITED STATES PATENT

GEORGE E. GOLDSTEIN, OF MONTREAL, QUEBEC, C.

APPARATUS FOR CURING OR ARTIFICIALLY AGING

1,137,752. Specification of Letters Patent. Pa

Application filed June 20, 1914. Serial No. 846,294.

To all whom it may concern:

Be it known that I, GEORGE E. GOLDSTEIN, of the city of Montreal, in the Province of Quebec and Dominion of Canada, a citizen of the Dominion of Canada, have invented certain new and useful Improvements in Apparatus for Curing or Artificially Aging Cigars, of which the following is a full, clear, and exact description.

This invention relates to improvements in apparatus for curing or artificially aging cigars or other forms of manufactured tobacco, and the object of the invention is to provide an apparatus which will operate automatically to maintain the proper temperature, humidity and circulation of the air coming in contact with the cigars.

The device consists essentially of a double walled chamber within which the cigars are stored. The inner wall is perforated, and air heating, humidifying and circulating means are provided in the space between the inner and outer walls of the chamber, so that the air is drawn from within the inner wall into the space between the inner and outer walls, brought to proper temperature and moisture, and redelivered within the inner wall. An electric thermometer and hygrometer are provided within the inner wall and automatically regulate the humidifying and heating apparatus to maintain as nearly as possible uniform conditions.

In the drawings which illustrate the invention:—Figure 1 is a vertical longitudinal section of the chamber showing the various elements of the apparatus diagrammatically. Fig. 2 is a plan view of the apparatus, the electrical equipment being omitted. Fig. 3 is a rear elevation of the device, the back outer wall being removed.

Referring more particularly to the drawings, 5 designates the outer and 6 the inner wall inclosing a chamber 7 for the storage of cigars. At the front of the chamber, in which is provided a door 8, and at the sides, the inner and outer walls may coincide, but it is essential that at back, top and bottom, a passage 9 be left for the circulation of air. At top and bottom, the inner wall 6 is provided with apertures 10 through which the air passes from the circulation passages into the chamber.

At the rear of the chamber, a heating coil 11, air circulating fan 12 and humidifying tank 13 are provided in the passage 9, as clearly shown in the ing coil is connected t with a feed tank 15 fo maintaining pressure fan 12 is operated p current drawn from humidifying tank 13 heating element 17 drawn from one of t wire 18 and returned through wire 19.

Within the chambe mometer or thermosta hygrometer 21 are pro fixed and a moving mometer and hygrome current from a batter as they make or break operate relay 23 and 2 relay 23 is arranged t circuit of the heater 17 arranged to open and an electrically operated tween the heater 14 and is operated by current to the mains through flows from the battery to both thermometer a from the thermometer the relay 23, and fr through wire 29 to the the relays back to the b 30. Current flows from wires 18 and 18ª to the 25, and returns through the relays and wires 31 a

The operation of the simple. If the humidity limit of variation, the i contact, which energizes relay to draw up its a break the circuit of the the humidity drops belo the battery circuit thr broken and the relay ar ing the heater circuit. rises beyond the set limi battery circuit through t and the armature is dra circuit of the valve 23, w off the supply of heat to the temperature drops s cuit through the relay is b mostat, and when the rela

G. E. GOLDSTEIN.

ATUS FOR CURING OR ARTIFICIALLY AGING CIGARS.

APPLICATION FILED JUNE 20, 1914.

Patented May 4, 1915.

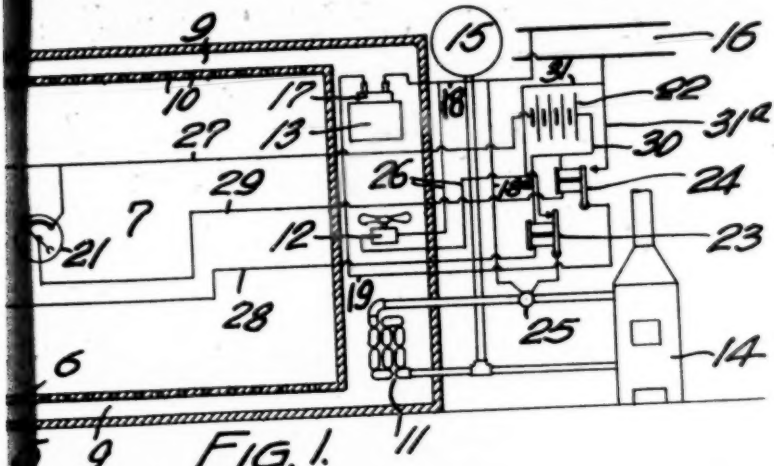

FIG. 1.

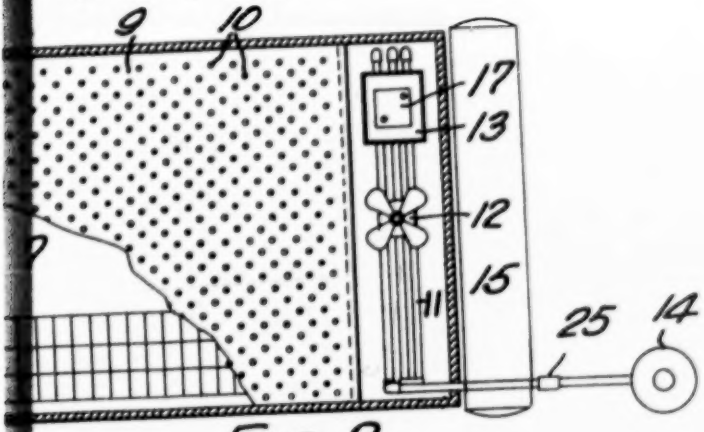

FIG. 2.

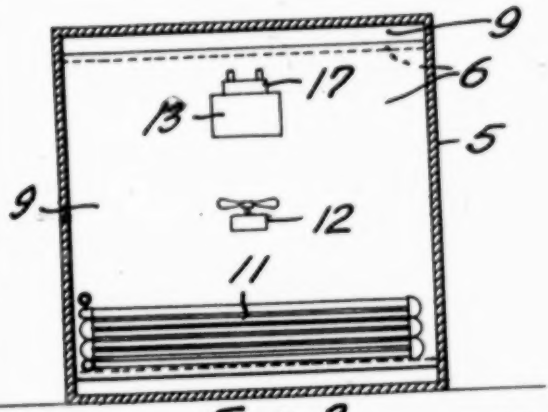

FIG. 3.

Inventor
G. E. Goldstein

By Fetherstonhaugh & Co
His Attorneys

UNITED STATES PATENT OFFICE.

GEORGE E. GOLDSTEIN, OF MONTREAL, QUEBEC, CANADA.

APPARATUS FOR CURING OR ARTIFICIALLY AGING CIGARS.

1,137,752. Specification of Letters Patent. Patented May 4, 1915.

Application filed June 20, 1914. Serial No. 846,294.

To all whom it may concern:

Be it known that I, GEORGE E. GOLDSTEIN, of the city of Montreal, in the Province of Quebec and Dominion of Canada, a citizen of the Dominion of Canada, have invented certain new and useful Improvements in Apparatus for Curing or Artificially Aging Cigars, of which the following is a full, clear, and exact description.

This invention relates to improvements in apparatus for curing or artificially aging cigars or other forms of manufactured tobacco, and the object of the invention is to provide an apparatus which will operate automatically to maintain the proper temperature, humidity and circulation of the air coming in contact with the cigars.

The device consists essentially of a double walled chamber within which the cigars are stored. The inner wall is perforated, and air heating, humidifying and circulating means are provided in the space between the inner and outer walls of the chamber, so that the air is drawn from within the inner wall into the space between the inner and outer walls, brought to proper temperature and moisture, and redelivered within the inner wall. An electric thermometer and hygrometer are provided within the inner wall and automatically regulate the humidifying and heating apparatus to maintain as nearly as possible uniform conditions.

In the drawings which illustrate the invention:—Figure 1 is a vertical longitudinal section of the chamber showing the various elements of the apparatus diagrammatically. Fig. 2 is a plan view of the apparatus, the electrical equipment being omitted. Fig. 3 is a rear elevation of the device, the back outer wall being removed.

Referring more particularly to the drawings, 5 designates the outer and 6 the inner wall inclosing a chamber 7 for the storage of cigars. At the front of the chamber, in which is provided a door 8, and at the sides, the inner and outer walls may coincide, but it is essential that at back, top and bottom, a passage 9 be left for the circulation of air. At top and bottom, the inner wall 6 is provided with apertures 10 through which the air passes from the circulation passages into the chamber.

At the rear of the chamber, a heating coil 11, air circulating fan 12 and humidifying tank 13 are provided in the passage 9, as clearly shown in the drawings. The heating coil is connected to a heater 14 provided with a feed tank 15 for supplying water and maintaining pressure for circulation. The fan 12 is operated preferably by electric current drawn from the mains 16. The humidifying tank 13 contains an electric heating element 17 operated by current drawn from one of the mains 16 through wire 18 and returned to the opposite main through wire 19.

Within the chamber 7, an electric thermometer or thermostat 20 and an electric hygrometer 21 are provided, each having a fixed and a moving contact. The thermometer and hygrometer are electrified by current from a battery 22, and according as they make or break the battery circuits operate relay 23 and 24 respectively. The relay 23 is arranged to open and close the circuit of the heater 17, and the relay 24 is arranged to open and close the circuit of an electrically operated valve 25 located between the heater 14 and coil 11. The fan 12 is operated by current flowing from and to the mains through wires 26. Current flows from the battery through the wire 27 to both thermometer and hygrometer, and from the thermometer through wire 28 to the relay 23, and from the hygrometer through wire 29 to the relay 24, and from the relays back to the battery through wire 30. Current flows from the main 16 through wires 18 and 18^a to the heater 17 and valve 25, and returns through the armatures of the relays and wires 31 and 31^a.

The operation of the device is extremely simple. If the humidity rises above the set limit of variation, the instrument 21 makes contact, which energizes the magnet of the relay to draw up its armature, and thus break the circuit of the heater 17. When the humidity drops below a certain point, the battery circuit through the relay is broken and the relay armature drops, closing the heater circuit. It the temperature rises beyond the set limit of variation, the battery circuit through the relay 23 is made and the armature is drawn up, making the circuit of the valve 23, which closes and cuts off the supply of heat to the coil 11. When the temperature drops sufficiently, the circuit through the relay is broken by the thermostat, and when the relay releases its armature, the valve circuit is opened and the

valve opens, admitting heat to the coil. The fan operates continuously, forcing the warm humid air up and allowing it to enter at the top of the chamber 7, and work downwardly through the cigars, escaping at the bottom into the passage 9 to be again drawn up by the fan through the coil 11 and reheated and rehumidified.

While the invention has been shown in its simplest form, it is obvious that a number of changes may be made in the apparatus as required to meet special conditions. If electricity or fluid fuel are used for the heater 14, the valve 25 will be arranged to control the supply of the heating agent.

Having thus described my invention, what I claim is:—

1. A device of the character described, comprising a double walled chamber having the inner wall thereof formed imperforate at opposite sides, an air heating coil, a water tank, and an air circulating fan located between the inner and outer walls, means for heating and circulating fluid through said coil, a heating apparatus located in the tank, a thermometer and a hygrometer located within the chamber, electrically actuated means controlled by said thermometer governing the circulation of the heating fluid through said coil, and electrically actuated means controlled by the hygrometer governing the operation of the heater in said tank.

2. A device of the character described, comprising a double walled chamber having opposite inner walls thereof formed perforate, a water tank, an air circulating fan and a radiator located between the inner and outer walls, a fluid heating and circulating apparatus connected to said radiator, an electric water heating means within the tank, a thermometer and a hygrometer located within the chamber, means for controlling the temperature and supply of fluid through said radiator, a source of electric energy for said heater, said fan and said controlling means, a battery, a relay in circuit with the battery and thermometer arranged to govern the connection of said heating fluid controlling means with the source of energy, and a second relay in circuit with the battery and hygrometer arranged to govern the connection of said electric water heater with the source of energy.

In witness whereof, I have hereunto set my hand in the presence of two witnesses.

GEORGE E. GOLDSTEIN.

Witnesses:
S. R. W. Allen,
G. M. Moreland.

866 (Defendants' Exhibit P, Letters Patent No
to S. S. Van Keuren, November 16, 1915.)

heat to the coil. The
sly, forcing the warm
owing it to enter at
r 7, and work down-
gars, escaping at the
e 9 to be again drawn
h the coil 11 and re-
d.
n has been shown in
obvious that a num-
made in the apparatus
pecial conditions. If
el are used for the
5 will be arranged to
the heating agent.
d my invention, what

character described,
alled chamber having
formed imperforate
r heating coil, a water
ating fan located be-
nter walls, means for
g fluid through said
ns located in the tank,
hygrometer located
electrically actuated
aid thermometer gov-
of the heating fluid
electrically actuated
means controlled by the hygrometer governing the operation of the heater in said tank.

2. A device of the character described, comprising a double walled chamber having opposite inner walls thereof formed perforate, a water tank, an air circulating fan and a radiator located between the inner and outer walls, a fluid heating and circulating apparatus connected to said radiator, an electric water heating means within the tank, a thermometer and a hygrometer located within the chamber, means for controlling the temperature and supply of fluid through said radiator, a source of electric energy for said heater, said fan and said controlling means, a battery, a relay in circuit with the battery and thermometer arranged to govern the connection of said heating fluid controlling means with the source of energy, and a second relay in circuit with the battery and hygrometer arranged to govern the connection of said electric water heater with the source of energy.

In witness whereof, I have hereunto set my hand in the presence of two witnesses.

GEORGE E. GOLDSTEIN.

Witnesses:
S. R. W. ALLEN,
G. M. MORELAND.

866 (Defendants' Exhibit P, Letters Patent No. 1,160,793 to S. S. Van Keuren, November 16, 1915.)

720

S. S. VAN KEUREN.

INCUBATOR.

APPLICATION FILED JUNE 12, 1915.

1,160,793.

Patented Nov. 16, 1915.

3 SHEETS—SHEET 1.

Fig. 1.

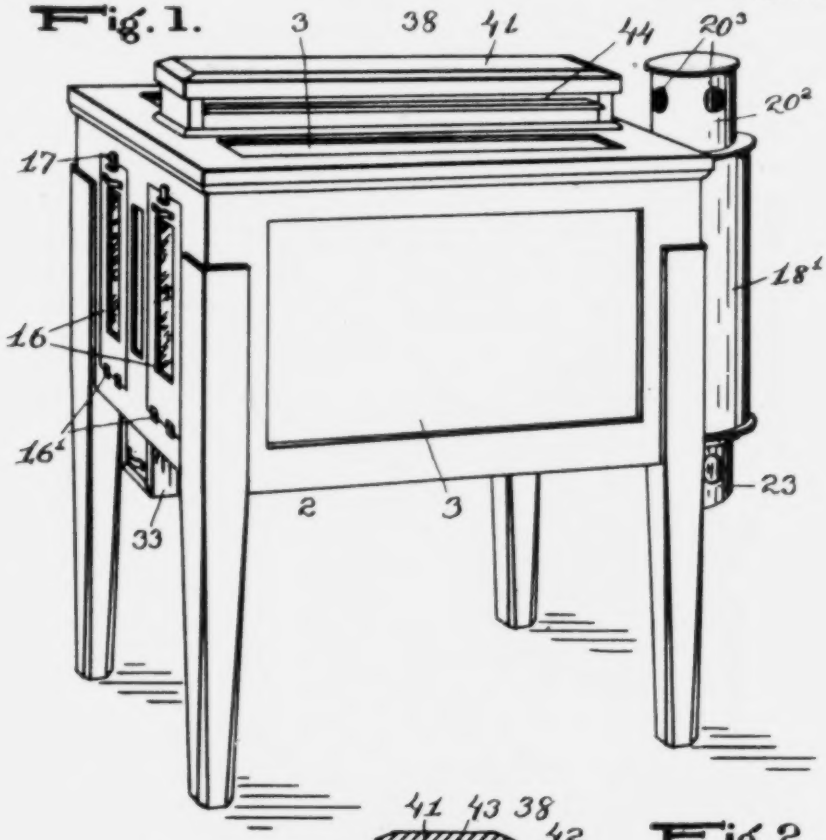

Fig. 2.

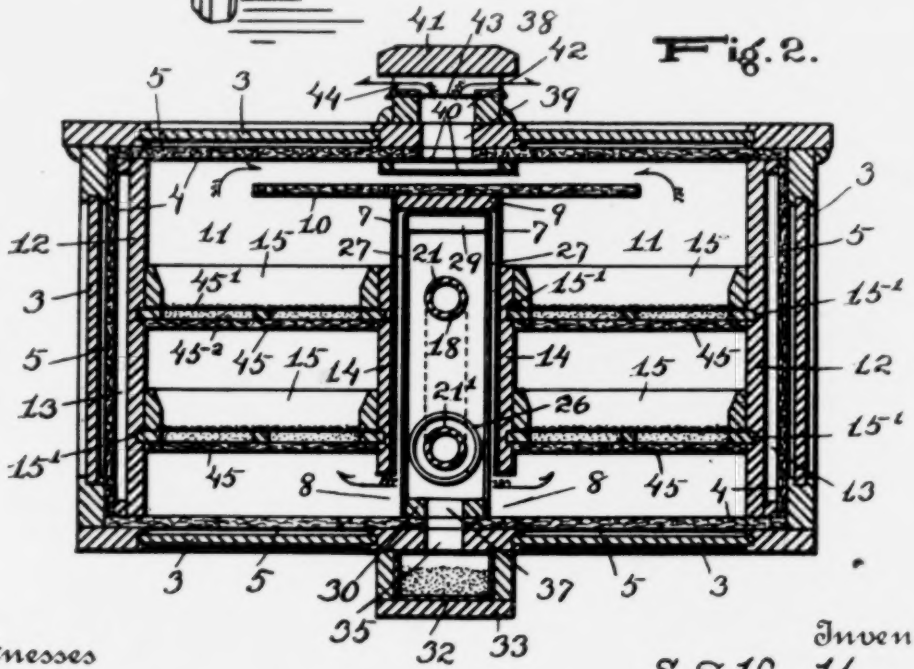

Witnesses

Stuart Hilder.

By

Inventor

S. S. Van Keuren

E. W. Anderson & Son

his Attorneys

722

S. S. VAN KEUREN.

INCUBATOR.

APPLICATION FILED JUNE 12, 1915.

1,160,793.

Patented Nov. 16, 1915.

3 SHEETS—SHEET 2.

Fig. 3.

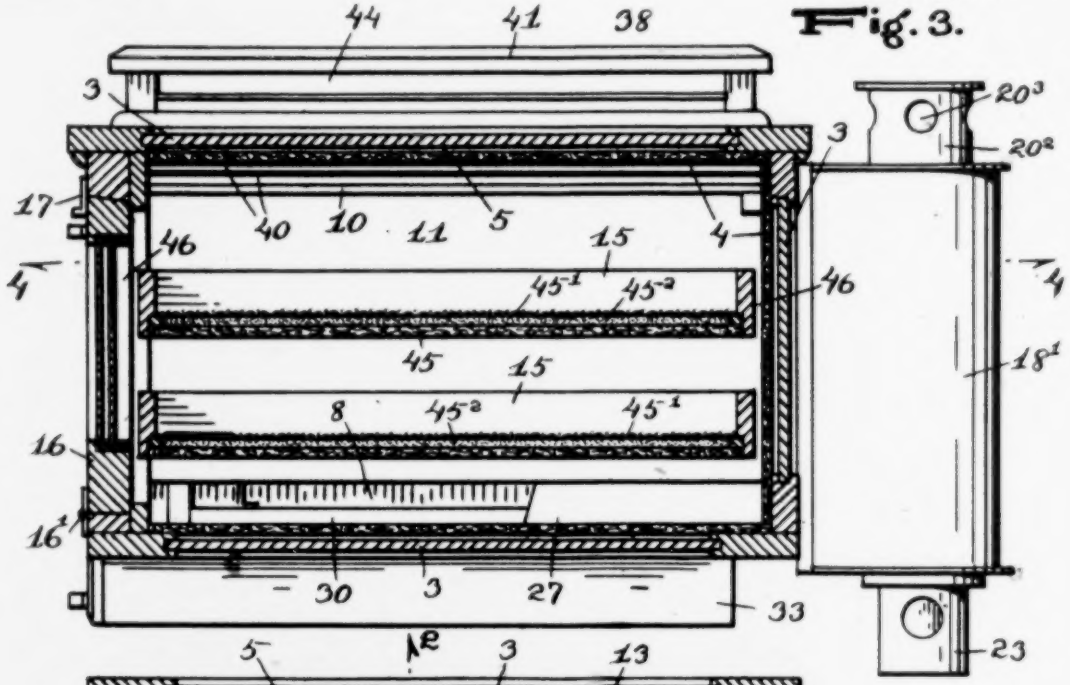

Fig. 4.

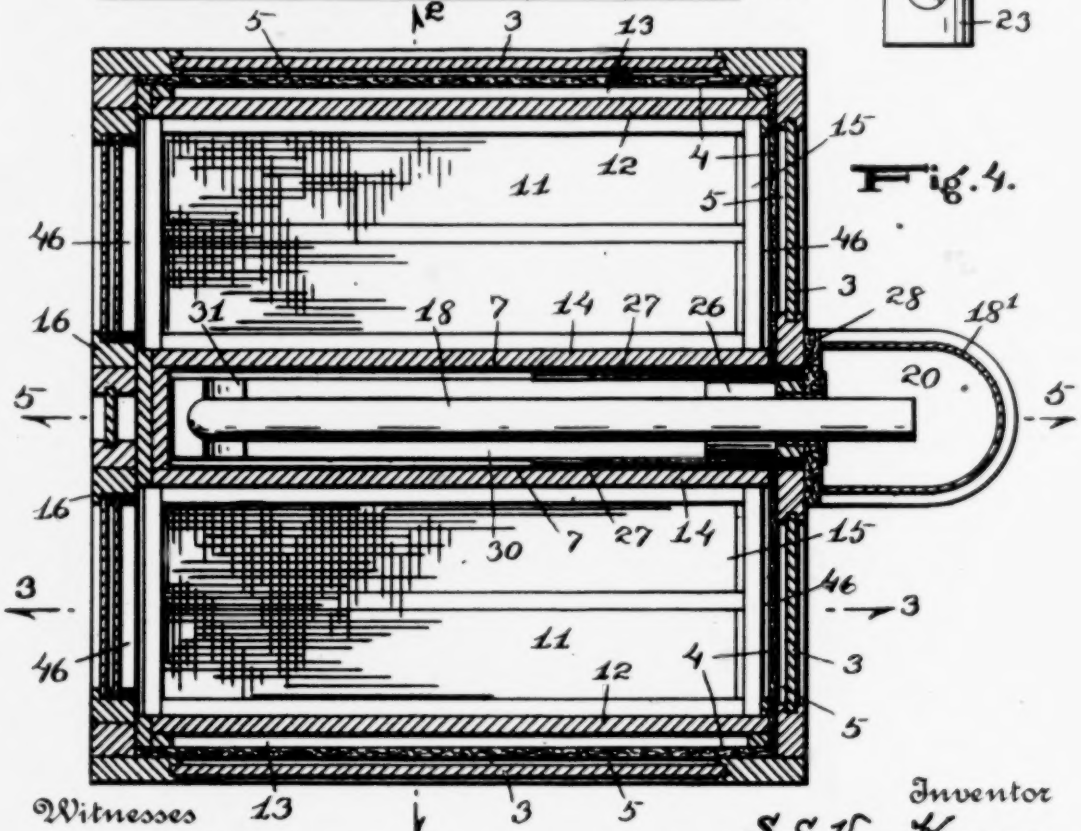

Witnesses

Stuart Hilder.

Inventor

S. S. Van Keuren

By E. W. Anderson & Son

Attorneys

724

S. S. VAN KEUREN.

INCUBATOR.

APPLICATION FILED JUNE 12, 1915.

1,160,793.

Patented Nov. 16, 1915.

3 SHEETS—SHEET 3.

Fig. 5.

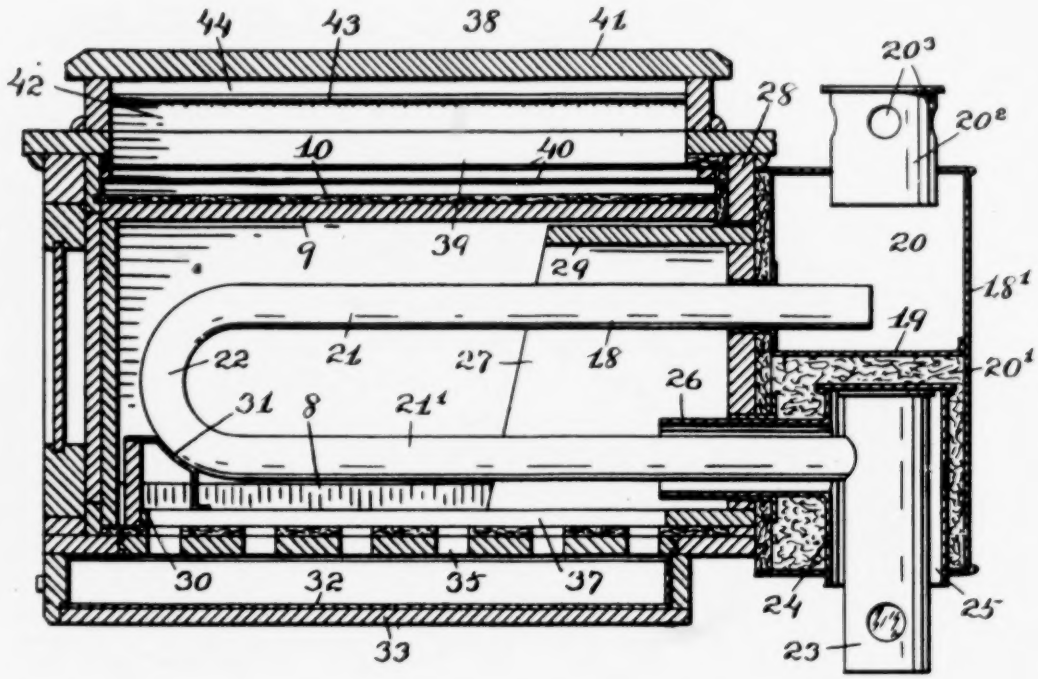

Fig. 6.

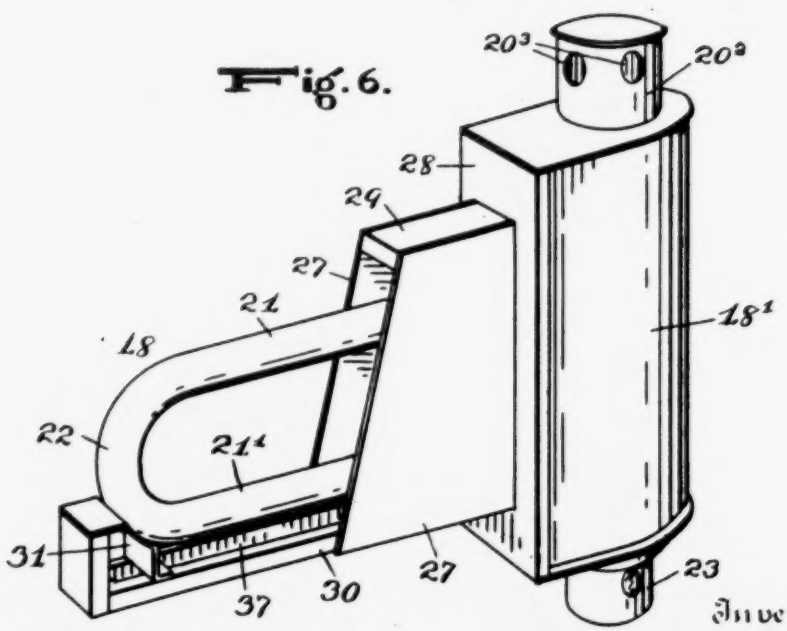

Witnesses

S. W. Hilder.

Inventor

S. S. Van Keuren

By E. W. Anderson & Son

Attorneys

UNITED STATES PATENT

SYLVANUS S. VAN KEUREN, OF ABERDEEN, SOUTH

INCUBATOR.

1,160,793. Specification of Letters Patent. Pate

Application filed June 12, 1915. Serial No. 33,705.

To all whom it may concern:

Be it known that I, SYLVANUS S. VAN KEUREN, a citizen of the United States, resident of Aberdeen, in the county of Brown and State of South Dakota, have made a certain new and useful Invention in Incubators; and I declare the following to be a full, clear, and exact description of the same, such as will enable others skilled in the art to which it appertains to make and use the invention, reference being had to the accompanying drawings, and to letters or figures of reference marked thereon, which form a part of this specification.

Figure 1 is a perspective view of the invention. Fig. 2 is a section on the line 2—2, Fig. 4. Fig. 3 is a section on the line 3—3, Fig. 4. Fig. 4 is a section on the line 4—4, Fig. 3. Fig. 5 is a section on the line 5—5, Fig. 4. Fig. 6 is a detail perspective view of the removable heater.

The invention has relation to incubators, and it consists in the novel construction and combinations of parts, as hereinafter set forth.

In the accompanying drawings, illustrating the invention, the numeral 2 designates the casing, having usually a framing provided upon each side and top and bottom with wooden insertion strips or panels 3 upon the outside, and fiber-board strips 4 upon the inside and spaced apart from the wooden strips or panels, to provide dead air spaces 5 for insulating purposes, said fiber-board strips meeting at the corners of the casing. At the center of the casing is a narrow vertical heating chamber, provided at each side with a metal plate 7, the two plates forming the side walls of said chamber and terminating near the bottom of the casing, from which they are separated by intervals 8, said heating chamber having a top 9 carrying a laterally extending deflector strip 10, located near the top and extending from end to end of the casing.

At each side of the heating chamber is an egg chamber 11, having an outer side wall 12 separated from the fiber-board strip by a space 13, constituting a second dead air or insulating space, and an inner side wall 14, located close to the radiator plate at this side. In each egg chamber are a plurality of egg trays 15, usually two, one over the other and having suitable support, usually sliding in guideways 15′, doors 16 in the front of the casing leading to the egg cham-

bers, said doors being at 16′ and having su each door being provi of glass or mica, sepa for insulation.

Fitting removably chamber is the radiato including a vertical m exteriorly of the incub horizontal partition 19 chambers 20, 20′. T horizontal upper and l connected by an inner of the upper branch h with the upper chamb of the lower branch ter tube 23, located in th designed for the intro source of heat supply, ney thereof. The upp ing tube terminates a lower portion of the heated air spreading in circulation being reta or upper chamber has 20², provided with la ings 20³.

The lower chamber inner lining 24, spaced proper of said chambe ing of asbestos or the This inner lining is a vertical tube, of large tube 23, from which space 25. The tube branch 26, of larger dia rounding the outer end branch 21′, said branch cation with the heating troduction of fresh a through the open bott The outer end of the nearest the lamp, is gu 27, 27. Usually the ver the heater has a backi fiber-board, to which th the guard plates 27 hav of wood or the like an of the same material, bo ried by said backing, sai a little longer than the its inner end having an metal support 31 theref

The backing of the he or door for the open

S. S. VAN KEUREN.

INCUBATOR.

APPLICATION FILED JUNE 12, 1915.

Patented Nov. 16, 1915.

3 SHEETS—SHEET 3.

Fig. 5.

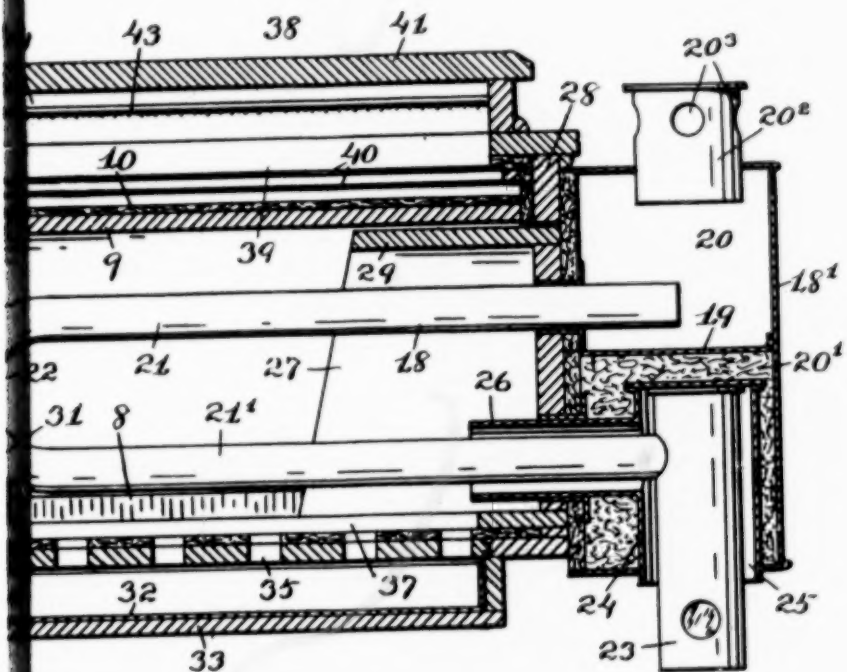

Fig. 6.

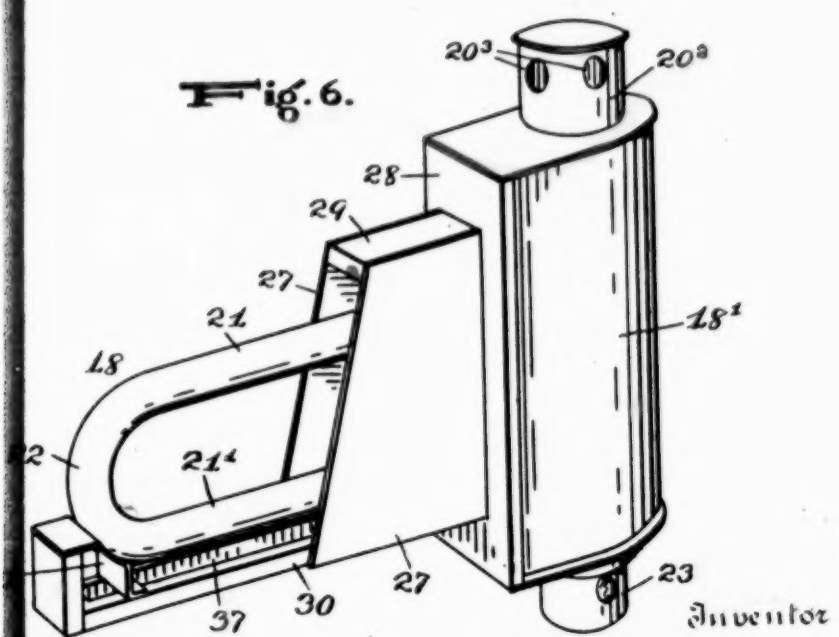

Inventor

S. S. Van Keuren

By E. W. Anderson & Son

Attorneys

Witness.

UNITED STATES PATENT OFFICE.

SYLVANUS S. VAN KEUREN, OF ABERDEEN, SOUTH DAKOTA.

INCUBATOR.

1,160,793. Specification of Letters Patent. Patented Nov. 16, 1915.

Application filed June 12, 1915. Serial No. 33,705.

To all whom it may concern:

Be it known that I, SYLVANUS S. VAN KEUREN, a citizen of the United States, resident of Aberdeen, in the county of Brown and State of South Dakota, have made a certain new and useful Invention in Incubators; and I declare the following to be a full, clear, and exact description of the same, such as will enable others skilled in the art to which it appertains to make and use the invention, reference being had to the accompanying drawings, and to letters or figures of reference marked thereon, which form a part of this specification.

Figure 1 is a perspective view of the invention. Fig. 2 is a section on the line 2—2, Fig. 4. Fig. 3 is a section on the line 3—3, Fig. 4. Fig. 4 is a section on the line 4—4, Fig. 3. Fig. 5 is a section on the line 5—5, Fig. 4. Fig. 6 is a detail perspective view of the removable heater.

The invention has relation to incubators, and it consists in the novel construction and combinations of parts, as hereinafter set forth.

In the accompanying drawings, illustrating the invention, the numeral 2 designates the casing, having usually a framing provided upon each side and top and bottom with wooden insertion strips or panels 3 upon the outside, and fiber-board strips 4 upon the inside and spaced apart from the wooden strips or panels, to provide dead air spaces 5 for insulating purposes, said fiber-board strips meeting at the corners of the casing. At the center of the casing is a narrow vertical heating chamber, provided at each side with a metal plate 7, the two plates forming the side walls of said chamber and terminating near the bottom of the casing, from which they are separated by intervals 8, said heating chamber having a top 9 carrying a laterally extending deflector strip 10, located near the top and extending from end to end of the casing.

At each side of the heating chamber is an egg chamber 11, having an outer side wall 12 separated from the fiber-board strip by a space 13, constituting a second dead air or insulating space, and an inner side wall 14, located close to the radiator plate at this side. In each egg chamber are a plurality of egg trays 15, usually two, one over the other and having suitable support, usually sliding in guideways 15′, doors 16 in the front of the casing leading to the egg chambers, said doors being hinged at the bottom at 16′ and having suitable top catches 17, each door being provided with double panes of glass or mica, separated by an air space for insulation.

Fitting removably within the heating chamber is the radiator pipe 18 of a heater, including a vertical metal casing 18′ located exteriorly of the incubator and divided by a horizontal partition 19 into upper and lower chambers 20, 20′. The heating tube has horizontal upper and lower branches 21, 21′, connected by an inner bend 22, the outer end of the upper branch having communication with the upper chamber and the outer end of the lower branch terminating in a vertical tube 23, located in the lower chamber and designed for the introduction of a suitable source of heat supply, as a lamp or the chimney thereof. The upper branch of the heating tube terminates about centrally of the lower portion of the upper chamber, the heated air spreading in said chamber and its circulation being retarded. The retarding or upper chamber has a top hood or stack 20^2, provided with lateral air exit openings 20^3.

The lower chamber is provided with an inner lining 24, spaced apart from the walls proper of said chamber and having a packing of asbestos or the like in the interval. This inner lining is also in the form of a vertical tube, of larger diameter than the tube 23, from which it is separated by a space 25. The tube 24 has a horizontal branch 26, of larger diameter than and surrounding the outer end of the heating tube branch 21′, said branch 26 having communication with the heating chamber for the introduction of fresh air, which passes in through the open bottom of the tube 24. The outer end of the heating tube, being nearest the lamp, is guarded by side plates 27, 27. Usually the vertical metal casing of the heater has a backing 28 of wood and fiber-board, to which the casing is secured, the guard plates 27 having a cover strip 29 of wood or the like and a bottom strip 30 of the same material, both strips being carried by said backing, said bottom strip being a little longer than the heater tube and at its inner end having an upwardly extending metal support 31 therefor.

The backing of the heater forms a closure or door for the open end of the heating chamber, the bottom strip resting upon the

bottom of the heating chamber, and the exterior metal casing being supported through engagement of the backing 28 with the upper and lower walls of the end of the heating chamber.

Below the heating chamber a moistening tray 32 is provided, said tray sliding in a supporting and inclosing box 33, the top of said box being provided with a series of perforations or slots 35 communicating with a slot 37 of the bottom strip of the heater, said slot communicating with the heating chamber. The moistening tray is suitably provided with water, usually being filled with sand saturated with water. This tray and its inclosing box are closely jointed, and are designed to be practically airtight.

Projecting above the top of the incubator, centrally thereof and running from front to back, is a ventilator 38, communicating with the interior of the casing by a slot 39 in the top of the casing, said slot being guarded by one or more thicknesses of thin felt 40, in order to impede the circulation of the air. The ventilator is provided with a suitable top 41, a vertical passage 42, guarded at the top by a screen 43 against the admission of insects and dust, and lateral openings 44, leading from said passage.

The egg trays are provided each with a bottom 45 of fiber-board and a false bottom 45′ of wire screen cloth, located above and separated from the fiber-board bottom by a space 45^2, in which sand is located. The eggs are turned twice daily, in practice, the trays being at the same time turned end for end and the bottom tray being placed at the top and vice versa, the trays being suitably numbered or tagged for identification.

The intermixed heat and fumes from the lamp are confined to the heater proper, and are not allowed entrance to the heating chamber or to the egg chambers.

The heated air in the heating chamber, the temperature of which is made higher by the side radiator plates, will pass out at the bottom at each side, under said radiator plates and under the lower egg trays, passing thence endwise of the egg chambers under the egg trays and up through passages 46 between the ends of the egg trays and the end walls of the egg chambers, the outer sides of the egg trays making a close joint with the sides of the egg chambers, to prevent rising of the heated air except at the ends of the trays. The heated air as it rises above the upper egg trays will be deflected outwardly by the deflector strip, and will pass around the outer edges of said strip into the narrow passage between the deflector strip and the top of the egg chambers, through the felt strips and up through the ventilator. The circulation of the heated air is always horizontal and upward, and never downward, and this circulation is made less rapid by the retarding felt strips of the ventilator, whereby the amount of heat required is reduced. The fresh air passing into the heating chamber is mixed with moisture from the moistening tray before it is admitted to the egg chambers.

What I claim is:—

1. In an incubator, lateral egg chambers, a central heating chamber, egg trays in said chambers having imperforate bottoms extending entirely across said chambers, the lower of said trays and the bottoms of the egg chambers being spaced apart to provide horizontal air passages and the said trays being spaced apart from the ends of said chambers to provide vertical air passages, said heating chamber having side walls provided with bottom openings in communication with said horizontal air passages.

2. In an incubator, lateral egg chambers, a central heating chamber, egg trays in said chambers having imperforate bottoms extending entirely across said chambers, the lower of said trays and the bottoms of the egg chambers being spaced apart to provide horizontal air passages and the said trays being spaced apart from the ends of said chambers to provide vertical air passages, said heating chamber having side walls composed of metal plates provided with bottom openings in communication with said horizontal air passages, and a deflecting strip carried by the top of the heating chamber and extending laterally partly over the egg trays, and spaced apart from the top of the egg chambers to provide upper horizontal air passages, a ventilator communicating with said upper horizontal air passages, and a moistening tray located below and communicating with the bottom of said heating chamber.

3. In an incubator, lateral egg chambers, a central heating chamber, egg trays in said chambers having imperforate bottoms extending entirely across said chambers, the lower of said trays and the bottoms of the egg chambers being spaced apart to provide horizontal air passages, and the trays being spaced apart from the ends of said chambers to provide vertical air passages, said heating chamber having side walls provided with bottom openings in communication with said horizontal air passages, and a removable heater for the heating chamber including a reversely bent tube having its ends opening exteriorly of said chamber.

4. In an incubator, lateral egg chambers, a central heating chamber, egg trays in said chambers having imperforate bottoms extending entirely across said chambers, the lower of said trays and the bottoms of the egg chambers being spaced apart to provide horizontal air passages, and the trays being spaced apart from the ends of said

chambers to provide vertical air passages. and a deflecting strip carried by the top of the heating chamber and extending laterally partly over the egg trays. said heating chamber having side walls provided with bottom openings in communication with said horizontal air passages. and a removable heater including a reversely bent tube having its ends opening exteriorly of said chamber. a lamp tube connected to the lower end of the heating tube. and a fresh air inlet tube surrounding the lamp tube having communication with said chamber.

5. In an incubator. lateral egg chambers. a central heating chamber. egg trays in said chambers having imperforate bottoms extending entirely across said chambers. the lower of said trays and the bottoms of the chambers being spaced apart to provide horizontal air passages. and the trays being spaced apart from the ends of said chambers to provide vertical air passages. a deflecting strip carried by the top of the heating chamber *and extending laterally* partly over the egg trays. said heating chamber having side walls provided with bottom openings in communication with said horizontal air passages. and a removable heater including a reversely bent tube having its ends opening exteriorly of the said chamber. a lamp tube connected to the lower end of the heating tube. a fresh air inlet tube surrounding the lamp tube and communicating with said chamber. a retarding box surrounding the upper end of said heating tube. a moistening tray underlying the heating chamber and having communication therewith. and a ventilator overlying the heating chamber.

6. In an incubator. lateral egg chambers. a central heating chamber. egg trays in said chambers having imperforate bottoms extending entirely across said chambers. the lower of said trays and the bottoms of the egg chambers being spaced apart to provide horizontal air passages. and the trays being spaced apart from the ends of said chambers to provide vertical air passages. said chamber having side walls provided with bottom openings in communication with said horizontal air passages. a deflecting strip extending laterally partly over the egg trays and spaced apart from the top of the egg chambers to provide upper horizontal air passages. a moistening tray underlying the heating chambe
cation with the bot
tilator overlying th
having communica
horizontal air passa

7. In an incubato
a central heating cha
chambers having in
tending entirely acr
lower of said trays
egg chambers being
horizontal air passa
ing spaced apart f
chambers to provide
said chamber havin
with bottom openi
with said horizontal
ing strip extending
the egg trays and s
top of the egg cham
horizontal air passa
heater comprising a
of the heating chamb
ing upon the floor o
versely bent tube ha
exteriorly of the said
ed by said door and
tube connected to the
and a retarding box s
end of said tube.

8. In an incubator.
a central heating cha
chambers having imp
tending entirely acro
lower of said trays a
egg chambers being s
horizontal air passage
spaced apart from th
bers to provide verti
chamber having side
bottom openings in
said horizontal air p
strip extending lateral
trays and spaced apar
egg chambers to prov
air passages. said egg
screen bottoms spaced
imperforate bottoms.

In testimony whereo
in presence of two wit

SYLVANUS S.

Witnesses:
EZRA L. BAKER,
THOMAS L. ARNO

amber, and the ex-
supported through
ng 28 with the up-
he end of the heat-

mber a moistening
l tray sliding in a
box 33, the top of
l with a series of
ommunicating with
strip of the heater,
with the heating
ng tray is suitably
sually being filled
water. This tray
re closely jointed,
ractically airtight.
p of the incubator,
nning from front
38, communicating
casing by a slot 39
ng, said slot being
thicknesses of thin
ede the circulation
r is provided with
rtical passage 42,
screen 43 against
and dust, and lat-
from said passage.
vided each with a
and a false bottom
located above and
board bottom by a
l is located. The
ly, in practice, the
time turned end
tray being placed
a, the trays being
gged for identifi-

nd fumes from the
heater proper, and
e to the heating
ambers.
heating chamber,
ch is made higher
es, will pass out at
under said radiator
er egg trays, pass-
egg chambers un-
through passages
e egg trays and the
hambers, the outer
aking a close joint
chambers, to pre-
l air except at the
eated air as it rises
ys will be deflected
tor strip, and will
dges of said strip
e between the de-
of the egg cham-
ips and up through
ulation of the heat-
al and upward, and
never downward, and this circulation is made less rapid by the retarding felt strips of the ventilator, whereby the amount of heat required is reduced. The fresh air passing into the heating chamber is mixed with moisture from the moistening tray before it is admitted to the egg chambers.

What I claim is:—

1. In an incubator, lateral egg chambers, a central heating chamber, egg trays in said chambers having imperforate bottoms extending entirely across said chambers, the lower of said trays and the bottoms of the egg chambers being spaced apart to provide horizontal air passages and the said trays being spaced apart from the ends of said chambers to provide vertical air passages, said heating chamber having side walls provided with bottom openings in communication with said horizontal air passages.

2. In an incubator, lateral egg chambers, a central heating chamber, egg trays in said chambers having imperforate bottoms extending entirely across said chambers, the lower of said trays and the bottoms of the egg chambers being spaced apart to provide horizontal air passages and the said trays being spaced apart from the ends of said chambers to provide vertical air passages, said heating chamber having side walls composed of metal plates provided with bottom openings in communication with said horizontal air passages, and a deflecting strip carried by the top of the heating chamber and extending laterally partly over the egg trays, and spaced apart from the top of the egg chambers to provide upper horizontal air passages, a ventilator communicating with said upper horizontal air passages, and a moistening tray located below and communicating with the bottom of said heating chamber.

3. In an incubator, lateral egg chambers, a central heating chamber, egg trays in said chambers having imperforate bottoms extending entirely across said chambers, the lower of said trays and the bottoms of the egg chambers being spaced apart to provide horizontal air passages, and the trays being spaced apart from the ends of said chambers to provide vertical air passages, said heating chamber having side walls provided with bottom openings in communication with said horizontal air passages, and a removable heater for the heating chamber including a reversely bent tube having its ends opening exteriorly of said chamber.

4. In an incubator, lateral egg chambers, a central heating chamber, egg trays in said chambers having imperforate bottoms extending entirely across said chambers, the lower of said trays and the bottoms of the egg chambers being spaced apart to provide horizontal air passages, and the trays being spaced apart from the ends of said

chambers to provide vertical air passages, and a deflecting strip carried by the top of the heating chamber and extending laterally partly over the egg trays, said heating chamber having side walls provided with bottom openings in communication with said horizontal air passages, and a removable heater including a reversely bent tube having its ends opening exteriorly of said chamber, a lamp tube connected to the lower end of the heating tube, and a fresh air inlet tube surrounding the lamp tube having communication with said chamber.

5. In an incubator, lateral egg chambers, a central heating chamber, egg trays in said chambers having imperforate bottoms extending entirely across said chambers, the lower of said trays and the bottoms of the chambers being spaced apart to provide horizontal air passages, and the trays being spaced apart from the ends of said chambers to provide vertical air passages, a deflecting strip carried by the top of the heating chamber and extending laterally partly over the egg trays, said heating chamber having side walls provided with bottom openings in communication with said horizontal air passages, and a removable heater including a reversely bent tube having its ends opening exteriorly of the said chamber, a lamp tube connected to the lower end of the heating tube, a fresh air inlet tube surrounding the lamp tube and communicating with said chamber, a retarding box surrounding the upper end of said heating tube, a moistening tray underlying the heating chamber and having communication therewith, and a ventilator overlying the heating chamber.

6. In an incubator, lateral egg chambers, a central heating chamber, egg trays in said chambers having imperforate bottoms extending entirely across said chambers, the lower of said trays and the bottoms of the egg chambers being spaced apart to provide horizontal air passages, and the trays being spaced apart from the ends of said chambers to provide vertical air passages, said chamber having side walls provided with bottom openings in communication with said horizontal air passages, a deflecting strip extending laterally partly over the egg trays and spaced apart from the top of the egg chambers to provide upper horizontal air passages, a moistening tray underlying the heating chamber and having communication with the bottom thereof, and a ventilator overlying the heating chamber and having communication with said upper horizontal air passages.

7. In an incubator, lateral egg chambers, a central heating chamber, egg trays in said chambers having imperforate bottoms extending entirely across said chambers, the lower of said trays and the bottoms of the egg chambers being spaced apart to provide horizontal air passages, and the trays being spaced apart from the ends of said chambers to provide vertical air passages, said chamber having side walls provided with bottom openings in communication with said horizontal air passages, a deflecting strip extending laterally partially over the egg trays and spaced apart from the top of the egg chambers to provide upper horizontal air passages, and a removable heater comprising a door for the open end of the heating chamber, a bottom strip resting upon the floor of said chamber, a reversely bent tube having its ends opening exteriorly of the said chamber and supported by said door and bottom strip, a lamp tube connected to the lower end of said tube and a retarding box surrounding the upper end of said tube.

8. In an incubator, lateral egg chambers, a central heating chamber, egg trays in said chambers having imperforate bottoms extending entirely across said chambers, the lower of said trays and the bottoms of the egg chambers being spaced apart to provide horizontal air passages and the trays being spaced apart from the ends of said chambers to provide vertical air passages, said chamber having side walls provided with bottom openings in communication with said horizontal air passages, a deflecting strip extending laterally partly over the egg trays and spaced apart from the top of the egg chambers to provide upper horizontal air passages, said egg trays having upper screen bottoms spaced apart form the lower imperforate bottoms.

In testimony whereof I affix my signature, in presence of two witnesses.

SYLVANUS S. VAN KEUREN.

Witnesses:
EZRA L. BAKER,
THOMAS L. ARNOLD.

KAISERLICHES PATENTAMT

AUSGEGEBEN DEN 11. NOVEMBER 1904.

LIBRARY U.S. PATENT OFFICE DEC 16 1904

PATENTSCHRIFT

№ 155917

KLASSE 45 h.

E. STULIK IN LICHTENBERG B. BERLIN.

Brutverfahren und Vorrichtung mit gruppenweiser Beschickung und gleichzeitiger Behandlung der zu verschiedenen Zeiten in den Brutapparat eingesetzten Eiergruppen.

Patentiert im Deutschen Reiche vom 7. November 1901 ab.

Bei den bisher bekannten Brutverfahren mit gruppenweiser Beschickung der verschiedenen Abteilungen des Brutapparates und gleichzeitiger Behandlung der zu verschiedenen Zeiten in die Brutvorrichtung eingesetzten Eiergruppen ist auf die Erhaltung einer gleichförmigen Temperatur im ganzen Brutraum zu wenig Rücksicht genommen. Bei den bekannten Verfahren dieser Art werden die einzelnen, zu verschiedenen Zeiten einzusetzenden Gruppen mit Bezug auf die Heizmittelführung parallel geschaltet. Entweder werden dabei die einzelnen Eierträger in einem von einem aufsteigenden Warmluftstrom durchzogenen Brutraum nacheinander in gewissen Zeitabschnitten seitlich verschoben, bis sie den ganzen Brutraum durchwandert haben, oder aber es wird eine Reihe zu verschiedenen Zeiten zu belegender Eierträger unter einem Warmwasserkessel angeordnet und während der Brutzeit jeder Eierträger für sich in passende Entfernung vom Heizkessel gebracht. Im ersten Fall wird der gegen Ende der Brütezeit wachsenden Eigenwärme der Eier nicht genügend Rechnung getragen, während im letzteren Fall, wo der oben im Brutraum angeordnete Warmwasserkessel den Brutraum durch Strahlung heizt, nach unten zu ein zu rascher Temperaturabfall eintritt, so daß nicht genügend viel Abstufungen für die Veränderung der Stellung der Eierträger während der Brütezeit gegeben sind. Demgegenüber werden gemäß der vorliegenden Erfindung die zu verschiedenen Zeiten in den Brutraum eingesetzten Eiergruppen immer unmittelbar ein und demselben Warmluftstrom ausgesetzt, und zwar derart, daß die Eiergruppen fortschreitend oder stufenweise in der Richtung des Warmluftstromes von der Wärmequelle entfernt werden, so daß die einzelnen Gruppen schließlich den ganzen Brutraum durchwandern. Hierdurch wird erreicht, daß die zuerst frisch in den Brutraum gebrachten Eiergruppen der vollen Wärme des Warmluftstroms ausgesetzt sind, während die älteren und im Brutraum weitergerückten Eiergruppen dem Warmluftstrom erst ausgesetzt werden, nachdem dieser bereits einen Teil seiner Wärme abgegeben hat. Es ist dadurch die Möglichkeit gegeben, daß unter Berücksichtigung der von den Eiern bei vorgeschrittenem Brüten entwickelten Eigenwärme in allen Abteilungen des Brutraumes eine gleichförmige Temperatur herrscht, indem in den über- oder nebeneinander liegenden Abteilungen die dem Warmluftstrom entzogene Wärme durch die Eigenwärme der Eier ergänzt wird. Es wird somit verhütet, daß die älteren Abteilungen einem zu hohen Wärmegrad ausgesetzt werden.

Die für das neue Brutverfahren eingerichteten Vorrichtungen bieten insbesondere für kleinere Betriebe den Vorteil, daß während des Ganges der Vorrichtung in bestimmten kleineren Zeiträumen frische Eiergruppen eingelegt werden können. Zweckmäßig befinden sich die verschiedenen Abteilungen übereinander, weil hierdurch einerseits eine günstige Verbindung der Vorrichtung mit dem als Glucke dienenden Raum und andererseits eine günstige Durchlüftung, also eine

same Ableitung der aus den bebrüteten Eiern sich entwickelnden Gase ermöglicht wird.

Auf der Zeichnung ist die neue Brutvorrichtung veranschaulicht, und zwar zeigt Fig. 1 die Vorderansicht bei teilweisem Schnitt, Fig. 2 den Längenschnitt, Fig. 3 den Querschnitt nach *A-A* von Fig. 1, Fig. 4 den Querschnitt nach *B-B* von Fig. 2; Fig. 5 zeigt schematisch eine abgeänderte Ausführungsform.

Bei der Ausführung Fig. 1 bis 4 sind in dem Brutraum *a* die Kästen *b* übereinander angeordnet. Die erwärmte Brütluft tritt durch das Rohr *c* unter den untersten Brutkasten. Die Kästen *b* sind mit Durchlochungen versehen, welche der erwärmten Luft das Aufsteigen durch alle durch die Kästen *b* gebildeten Abteilungen gestattet. Die oberste Abteilung ist mit dem Luftabzug *d* versehen. Der Brutraum *a* besitzt auf der einen Seite die den Kästen *b* entsprechenden, übereinander angeordneten Türen *f* (Fig. 2). Die Brutkästen *b* können einzeln herausgenommen werden. Der Brutraum *a* ist zweckmäßig von einem Mantel *w* zur Aufnahme erwärmten Wassers umgeben, um Wärmeabgabe nach außen zu verhindern. Eine äußere Tür *g* vor den Türen *f* kann als Schutz gegen Wärmeausströmung durch die Türen *f* angeordnet sein, wie Fig. 2 zeigt. Die Einrichtungen zum Schutze gegen Wärmeabgabe nach außen gehören nicht unmittelbar zur vorliegenden Erfindung.

Bei der dargestellten Ausführung befindet sich der Brutraum *a* über dem bekannten, als Glucke dienenden Behälter *h*. Innerhalb dieses Behälters *h* liegt die Heizkammer *i*, die von irgend einer Wärmequelle, wie Pfeil *k* andeutet etwa durch eine bei *s* aufgestellte Lampe, mit heißer Luft beschickt wird. Ein nach außen führender Abzug für die Heizgase kann bei *l* vorgesehen sein.

Das Luftzuführrohr *c* ist durch die Kammer *i* hindurchgeführt. Die Heizgase strömen aus dem Raum *i* durch eine Öffnung *m* in die Kammer *y* und verteilen sich von hier in die Röhren *n*, die das Wasser im Mantel *w* erwärmen. Die Gase sammeln sich schließlich wieder im Raum *x*, um von hier aus bei *r* abzuziehen.

Beim Betrieb wird zunächst die unterste Brutabteilung beschickt und nach einiger Zeit der unterste Brutkasten mit den Eiern herausgenommen und in die nächst obere Abteilung gebracht. Die Eier könnten auch einfach in die nächst obere Abteilung herübergelegt werden. Dann folgt die erneute Beschickung der untersten Abteilung. Dieser Vorgang wiederholt sich, so daß allmählich die einzelnen Gruppen bis nach der obersten Abteilung gelangen. Mit dem Luftabzug *d* kann in bekannter Weise eine Vorrichtung *o* verbunden sein, die abhängig von der Wärme in der obersten Brutabteilung die Beheizung mittels der Hebelübersetzung *p* regelt, indem sie die Verschlußklappe *q* für den Abzug *l* der Heizkammer *i* mehr oder weniger öffnet oder schließt.

Die beschriebene Brutvorrichtung läßt sich in ihren Einzelheiten abändern. Wie Fig. 5 zeigt, können die Abteilungen 1 bis 7, welche nacheinander von dem Warmluftstrom und von den Eiern durchwandert werden, nebeneinander angeordnet sein. In jedem Falle ist es wesentlich, daß die von den Eiern mit der Zeit entwickelte Eigenwärme für die gleichmäßige Erhaltung der Temperatur im ganzen Brutraum berücksichtigt wird. Die Anordnung eines Heizmantels ist für das Verfahren nicht unbedingt erforderlich, derselbe verhütet aber Unregelmäßigkeiten durch Wärmeausstrahlung nach außen. Durch die beschriebene Vorrichtung wird vor allem vermieden, daß die Eier gegen Ende der Brütezeit einem zu hohen Wärmegrade ausgesetzt sind.

Patent-Ansprüche:

1. Brutverfahren mit gruppenweiser Beschickung und gleichzeitiger Behandlung der zu verschiedenen Zeiten in den Brutapparat eingesetzten Eiergruppen, dadurch gekennzeichnet, daß die in den Brutraum zu verschiedenen Zeiten eingesetzten Eiergruppen demselben Warmluftstrom unmittelbar in der Weise ausgesetzt werden, daß die Eiergruppen stufenweise in der Richtung des Warmluftstromes in größere Entfernung von der Wärmequelle gebracht werden, wobei der zuerst die frisch in den Brutraum gebrachte Eiergruppe und dann nacheinander die älteren Gruppen bestreichende Warmluftstrom auf die einzelnen Eiergruppen so viel Wärme überträgt, daß unter Berücksichtigung der zu derselben Zeit verschiedenen Eigenwärmen der Eier im ganzen Brutraum eine gleichförmige Temperatur herrscht.

2. Brutvorrichtung zur Ausführung des Verfahrens nach Anspruch 1, dadurch gekennzeichnet, daß die zur gruppenweisen Weiterschaltung der Eier dienenden, der Brütluft freien Zutritt zu den Eiern gestattenden Eierträger, welche die von dem Warmluftstrom nacheinander durchzogenen Einzelabteilungen bilden, neben- oder übereinander angeordnet sind.

Hierzu 1 Blatt Zeichnungen.

Fig. 1.

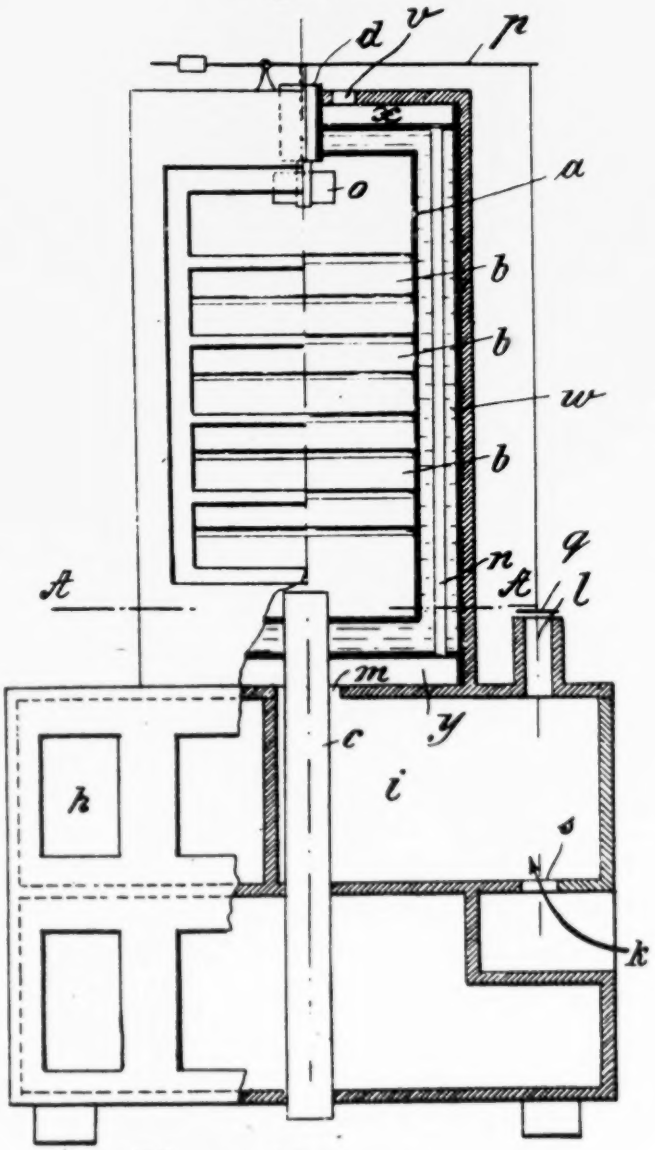

Fig. 2.

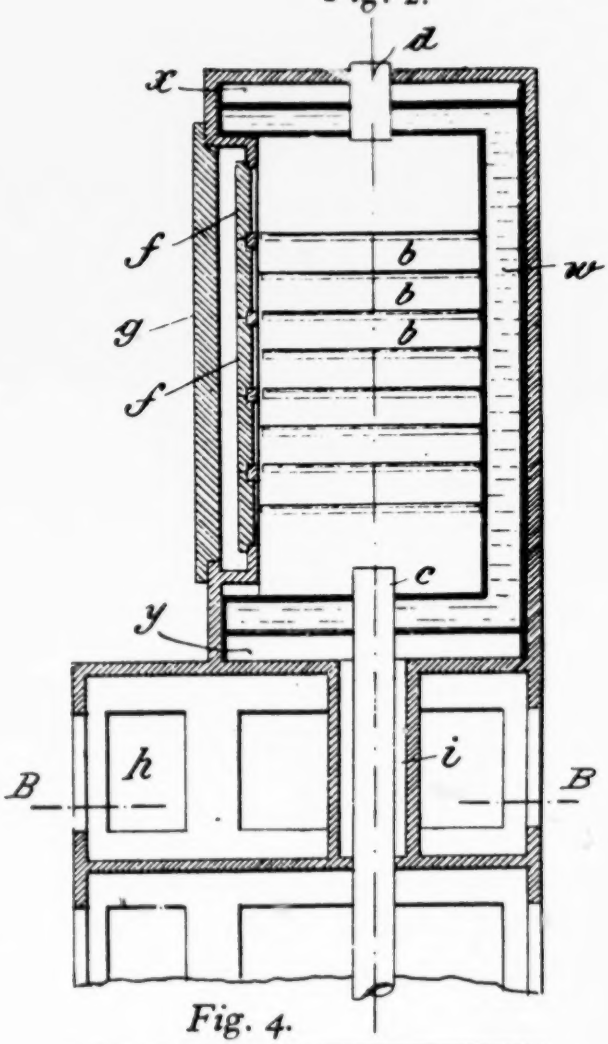

Fig. 3.

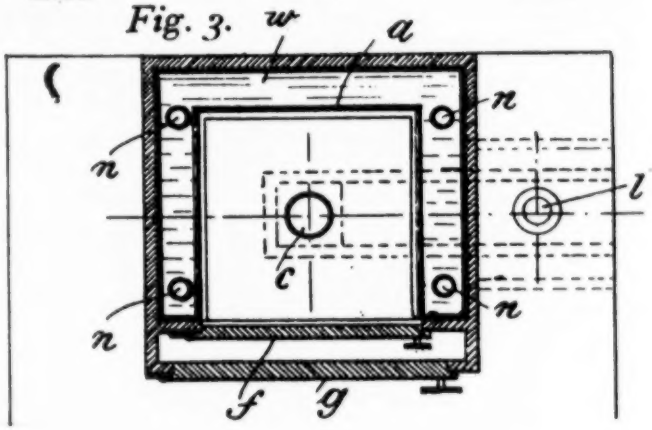

Fig. 4.

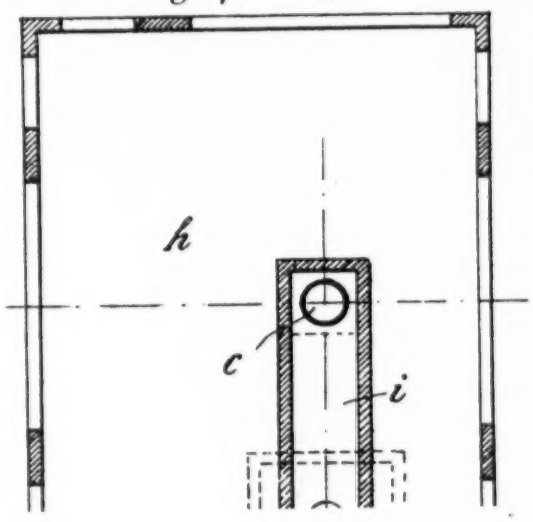

Part of Def. Ex. P

DEPARTMENT OF COMMERCE
UNITED STATES PATENT OFFICE

To all persons to whom these presents shall come, Greeting:

THIS IS TO CERTIFY that the annexed is a [redacted] Translation made by the Official Translator from the Records of this Office of the Specification, in the matter of the

German Letters Patent to

E. Stulik,

dated November 7, 1901, Number 155,917,

for

Improvement in process and device for group charging and simultaneous treatment of the groups of eggs inserted at different times into the incubating apparatus.

IN TESTIMONY WHEREOF I have hereunto set my hand and caused the seal of the Patent Office to be affixed, at the City of Washington, this twenty-seventh day of August, in the year of our Lord one thousand nine hundred and thirty-one and of the Independence of the United States of America the one hundred and fifty-sixth.

Def. Ex. P

DEPARTMENT OF COMMERCE
UNITED STATES PATENT OFFICE

To all persons to whom these presents shall come, Greeting:

THIS IS TO CERTIFY that the annexed is a ~~[illegible]~~ Translation made by the Official Translator from the Records of this Office of the Specification, in the matter of the

German Letters Patent to

E. Stulik,

Dated November 7, 1901, Number 155,917,

for

Improvement in process and device for group charging and simultaneous treatment of the groups of eggs inserted at different times into the incubating apparatus.

IN TESTIMONY WHEREOF I have hereunto set my hand and caused the seal of the Patent Office to be affixed, at the City of Washington, this twenty-seventh day of August, in the year of our Lord one thousand nine hundred and thirty-one and of the Independence of the United States of America the one hundred and fifty-sixth.

ATTEST:

Chief of Division.

Thomas E. Robertson
Commissioner of Patents.

Translation of German Patent No. 155917 to E. Stulik in Lichtenberg near Berlin, Class 45 h; patented in Germany from November 7, 1901; published November 11, 1904.

Incubating process and device for group charging and simultaneous treatment of the groups of eggs inserted at different times into the incubating apparatus.

In the incubating processes hitherto known with group charging of the various compartments of the incubating apparatus and simultaneous treatment of the groups of eggs inserted at different times into the incubating apparatus too little attention has been paid to the maintenance of a uniform temperature in the whole incubating room. In known processes of this kind the individual groups inserted at different times have been arranged in parallel with respect to the supply of heat medium. Either the individual egg carriers were displaced laterally at given time intervals in succession in an incubating room traversed by an ascending current of hot air, until the whole incubating room had been passed through, or a row of egg carriers to be charged at different times was placed under a hot water boiler, and each egg carrier by itself removed to a suitable distance from the boiler during incubation. In the first case the self-heat of the eggs increasing toward the end of the incubating period is not taken sufficiently into account, while in the latter case, where the hot water boiler arranged at the top of the incubating room heats the same by radiation, a too rapid fall in temperature takes place toward the bottom, so that not enough steps are allowed for changing the position of the eggs during the incubating period. On the other hand, the egg groups inserted into the incubating room at different times according to the present invention are always exposed directly to the very same current of hot air, in such a way that the groups are removed progressively or by stages from the source of heat in the direction of the hot air current and the

individual groups traverse in the end the entire incubating room. In this way the result is attained, that the egg groups freshly placed in the incubating room are exposed to the full heat of the hot air current, while the older groups, farther advanced in the incubating room, are exposed to the current, only after it has given up a part of its heat. The possibility is thus offered of maintaining a uniform temperature in all compartments of the incubating room, while taking into consideration the self-heat developed by the eggs in the later stages of incubation, in that the heat abstracted from the air current in the superimposed or adjoining compartments is supplemented by the self-heat of the eggs. In this way the compartments with older eggs are prevented from exposure to too great heat.

The devices constructed for the new incubating process offer the advantage, especially for smaller operations, that, while the apparatus is working, fresh groups of eggs can be inserted at given, shorter intervals. The different compartments are appropriately superimposed, as in this way a good connection with the heating room is made possible, on the one hand, and, on the other hand, good ventilation, therefore effective withdrawal of the gases developed from the hatched eggs.

The new incubating device is illustrated on the drawing. [illegible] shows a front view with partial section. Fig. 2 a longi-

individual groups traverse in the end the entire incubating room. In this way the result is attained, that the egg groups freshly placed in the incubating room are exposed to the full heat of the hot air current, while the older groups, farther advanced in the incubating room, are exposed to the current, only after it has given up a part of its heat. The possibility is thus offered of maintaining a uniform temperature in all compartments of the incubating room, while taking into consideration the self-heat developed by the eggs in the later stages of incubation, in that the heat abstracted from the air current in the superimposed or adjoining compartments is supplemented by the self-heat of the eggs. In this way the compartments with older eggs are prevented from exposure to too great heat.

The devices constructed for the new incubating process offer the advantage, especially for small operations, that, while the apparatus is working, fresh groups of eggs can be inserted at given, shorter intervals. The different compartments are appropriately superimposed, as in this way a good connection with the heating room is made possible, on the one hand, and, on the other hand, good ventilation, therefore effective withdrawal of the gases developed from the hatched eggs.

The new incubating device is illustrated on the drawing. Fig. 1 shows a front view with partial section, Fig. 2 a longitudinal section, Fig. 3 a cross section following A-A of Fig. 1, Fig. 4 a cross section following B-B of Fig. 2; Fig. 5 shows diagramatically a modified form of construction.

In the embodiment of Figs. 1 to 4 the cases b are arranged in superposition in the incubating room a. The heated air enters through the pipe e under the lowermost case. The cases b are provided with perforations, which permit the heated air to rise through all the compartments formed by the cases b. The uppermost compartment is provided with the air take-off d. The incubating

a possesses doors f superimposed on one side, corresponding to the cases b (Fig.2). The cases b can be individually removed. The incubating room a is suitably enclosed with a jacket w for receiving heated water, to prevent delivery of heat to the outside. Another g may be arranged in front of the doors f to protect against the exit of heat through these doors, as Fig. 2 shows. The devices for protecting against loss of heat to the outside do not directly appertain to the present invention.

In the embodiment represented the incubating room is located above the familiar container h for the heating apparatus. The heating chamber i lies inside of this container, which may be charged with hot air from any kind of heat source, perhaps, as indicated by arrow k, by a lamp erected at s. A take-off for the heating gases leading to the outside may be provided at l.

The air supply pipe c is passed through the chamber i. The hot gases flow from the chamber i through an opening m into the chamber y, whence they are distributed into the pipes n, which heat the water in the jacket w. The gases finally collect in the chamber x, whence they pass out at v.

When the apparatus is to be operated, the lowermost compartment is first charged and after some time the lowermost case is removed with the eggs and placed in the next higher compartment. The eggs could also be simply transferred to the next higher compartment. The lowermost compartment is then charged again. This operation is repeated, so that the individual groups gradually come to reach the uppermost compartment. A device c may be connected with the air take-off d, which regulates the heating by means of the lever transmission p independently of the heat in the uppermost compartment by opening or closing more or less the trap-door q for the take-off l of the heating chamber i.

The incubating device described may be modified in its details. As Fig. 5 shows, the compartments 1 to 7, which are

traversed in succession by the hot air current and by the eggs may be arranged so as to adjoin. In any case it is essential that the self-heat developed in time by the eggs should be taken into consideration in keeping the temperature uniform in the whole incubating room. The arrangement of a heating jacket is not absolutely indispensable to the process, but it prevents irregularities caused by the radiation of heat to the outside. The device described first of all guards the eggs toward the end of the incubating period from exposure to too great heat.

Patent Claims.

1. Incubating process for group charging and simultaneous treatment of groups of eggs inserted at different times into the incubating apparatus, characterized thereby, that the egg groups inserted at different times into the incubating room are directly exposed to the same current of hot air thereby, that the groups of eggs are moved by stages in the direction of the hot air current more and more from the source of heat; while this is taking place, the hot air current, first brushing the eggs freshly laid in the incubating room and then in succession the older groups, transfers to the individual groups so much heat that a uniform temperature prevails in the entire incubating room, when the various degrees of self-heat of the eggs at the samt time is taken into consideration.

2. Incubating device for applying the process according to claim 1, characterized thereby, that the egg carriers, serving to move the eggs in groups and giving the incubating air free access to the eggs, which form the individual compartments traversed successively by the hot air current, are arranged side by side or superimposed.

Tr/GWH
8/26/31

883 (Defendants' Exhibit P, Letters Patent No. 3,019 to N. E. Guerin, March 30, 1843.)

4 Sheets—Sheet 4.

N. E. GUERIN.

ARTIFICIAL METHOD OF REARING CHICKENS.

No. 3,019. Patented Mar. 30. 1843.

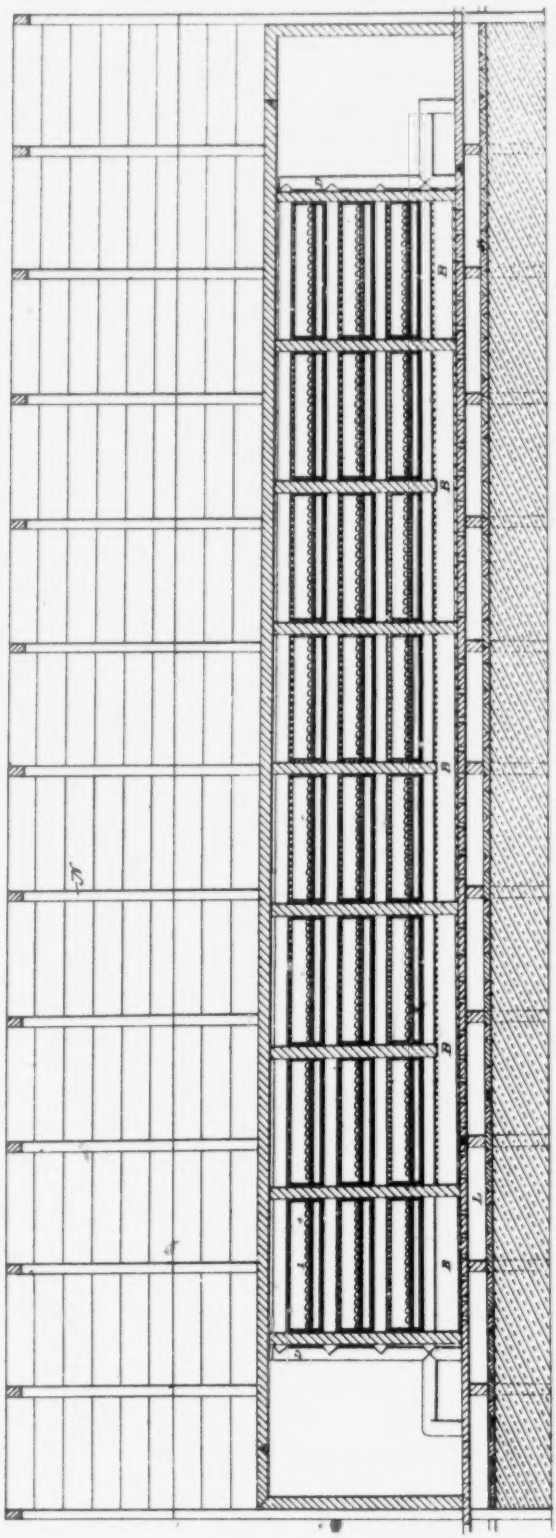

Inventor
N. E. Guerin

748

N. E. GUERIN.

ARTIFICIAL METHOD OF REARING CHICKENS.

No. 3,019. Patented Mar. 30, 1843.

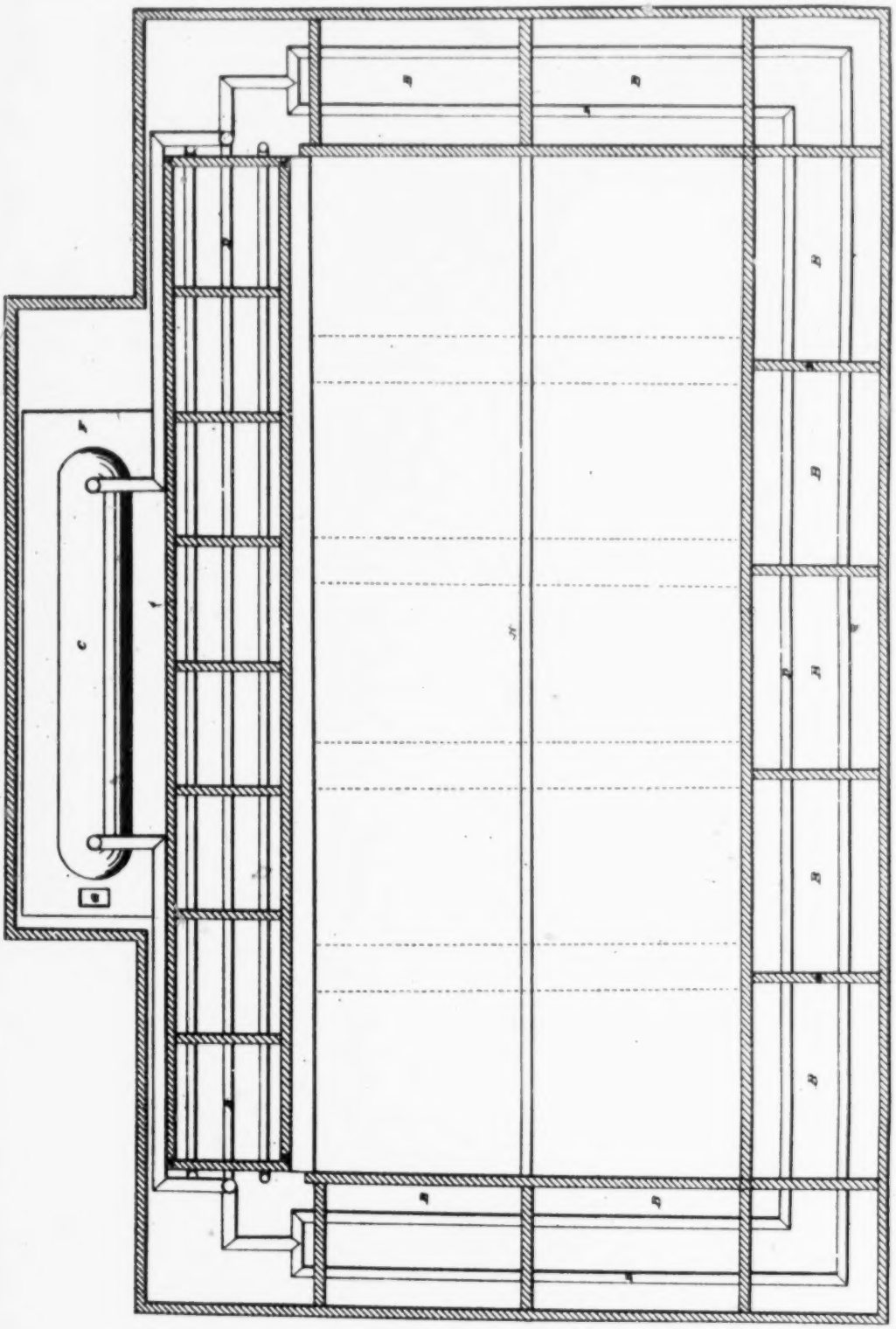

Inventor

N. E. Guerin

750

N. E. GUERIN.

ARTIFICIAL METHOD OF REARING CHICKENS.

No. 3,019. Patented Mar. 30, 1843.

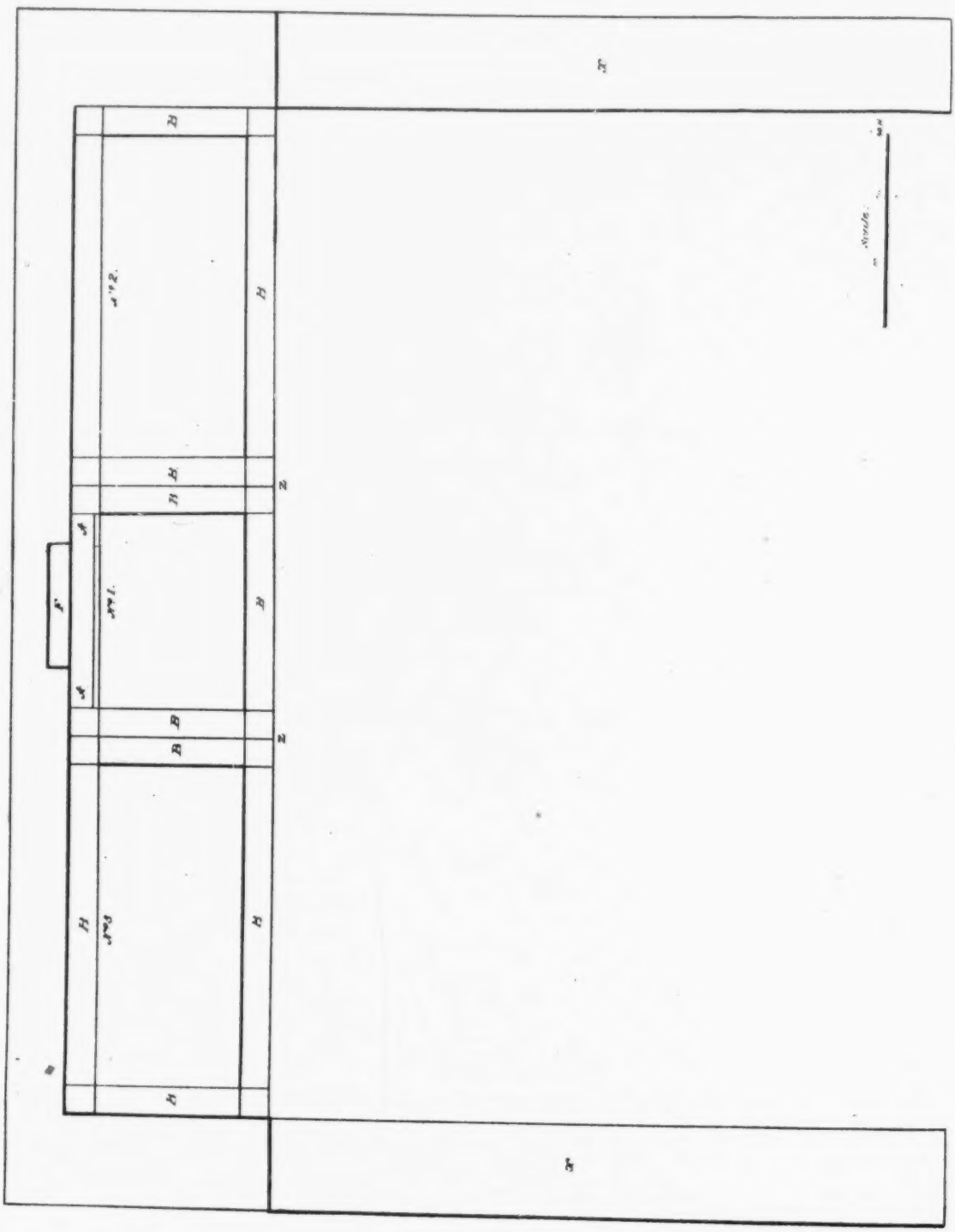

Inventor:

N. E. Guerin

752

N. E. GUERIN.

ARTIFICIAL METHOD OF REARING CHICKENS.

No. 3,016. Patented Mar. 30, 1843.

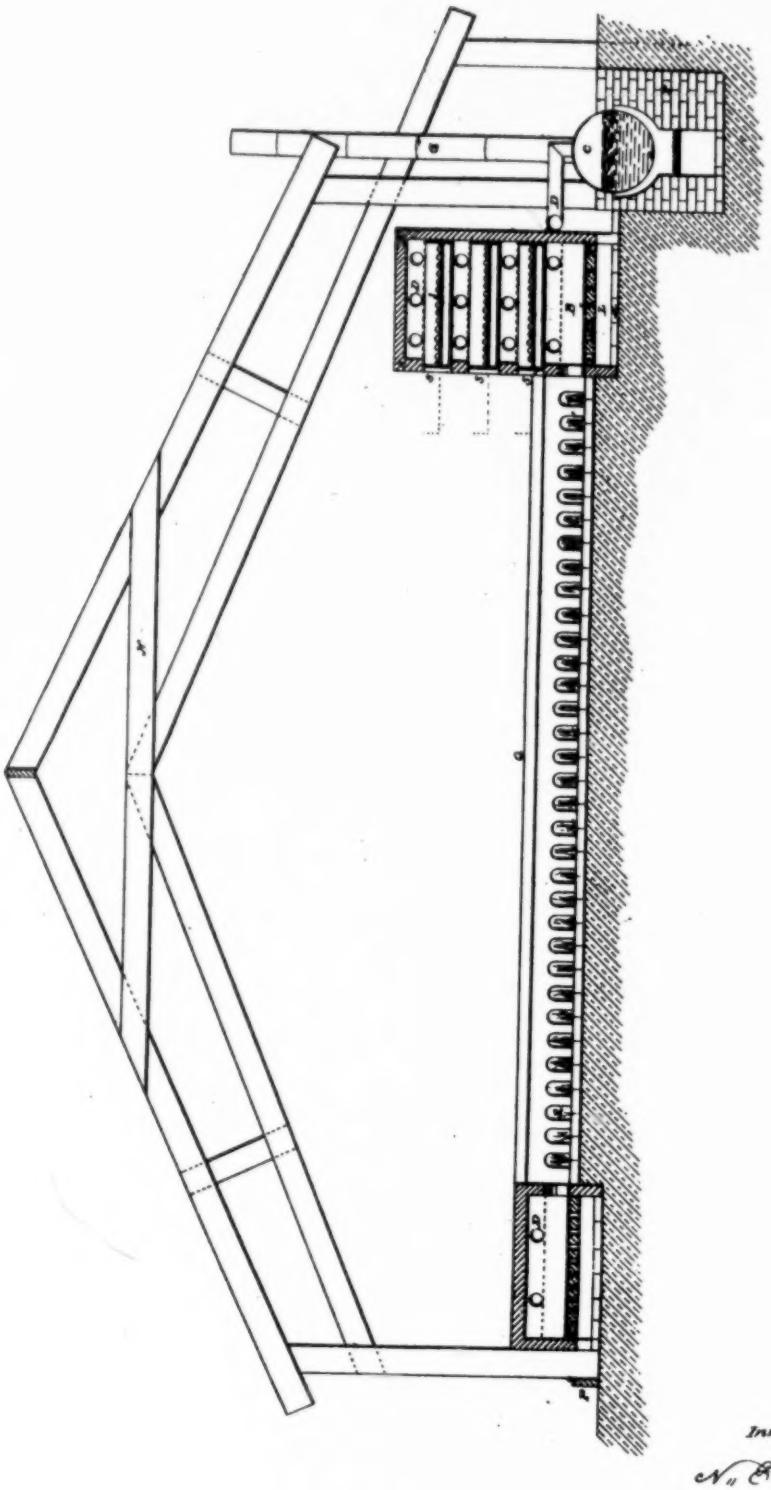

Inventor:

N. E. Guerin

UNITED STATES PATENT

NAPOLEON E. GUERIN, OF NEW YORK, N

HATCHING CHICKENS.

Specification of Letters Patent No. 3,019, dated Marc

To all whom it may concern:

Be it known that I, NAPOLEON E. GUERIN, of the city of New York, county and State of New York, have invented an Artificial Method of Rearing Chickens; and I do hereby declare that the following is a full and exact description.

The nature of my invention consists in a method of rearing the chickens, after the hatching of the eggs, in an oven as herein described.

Several attempts have been made to hatch eggs by artificial means, and to rear the chickens thus produced. The first of these operations has been successful, but all efforts to rear the chickens have been hitherto fruitless; from the circumstances that those who made the experiments considered the chicken as an animal which was endowed with the faculties of locomotion and of sight, and was also enabled to partake of food from the moment of its birth, and under this impression all that was necessary, or deemed so, was to protect the young birds from the inclemency of the weather, and they were accordingly kept in heated apartments without air. Although the chicken is a bird which is easily reared, since it is able to eat, as it were, at the moment it breaks its shell, still it must be admitted that there are also certain requisites which are indispensable to its existence, namely, air and heat judiciously combined. If the attempts above alluded to had been effected by men of observation, residing in the country, they would have doubtless been more successful in their undertakings, as it is extremely probable that they would have observed the method adhered to by the farmer's wife, when by some mishap a newly hatched brood of chickens are deprived of the mother who would so faithfully have watched over them; a method it may be remarked which almost invariably succeeds, they are taken by the farmer's wife and placed in a loosely woven basket, in the bottom of which some fresh straw has previously been deposited, the whole being covered with cotton or wool, after which the basket is brought near the fire, where it is left for a fortnight and there receive the heat from it. If you ask these women the motive of this mode of treating the young chicken, they will merely answer that they do not know why preference to any seen their mother and meet with si observer will at way in which the quately supplied; the chickens on them in a cool sta its parent, while of the body are w from the hen's bo the means employ to chance as to a would be impossib effectually, since air from below an

Drawing No. I. ing for the artifici sand five hundred the chicken durin existence.—A A eight divisions, fo four drawers, th placed one above contain from thre three hundred an 314). B B B B, sleep in; these are apartment, the ha on the top of the apartment. C the steam pipes for h upper part of the to support the ste of the boiler. G stream of water w of the building; th and is kept very cl renewed. The s ranges of nests is used as a yard for

Drawing No. and height of t A sectional plan, cording to the line so as to admit of B the nests under There are nine of are placed by thre heat does not bear piece of stout cot there is a red pain absorbs the heat

N. E. GUERIN.

RTIFICIAL METHOD OF REARING CHICKENS.

Patented Mar. 30, 1843.

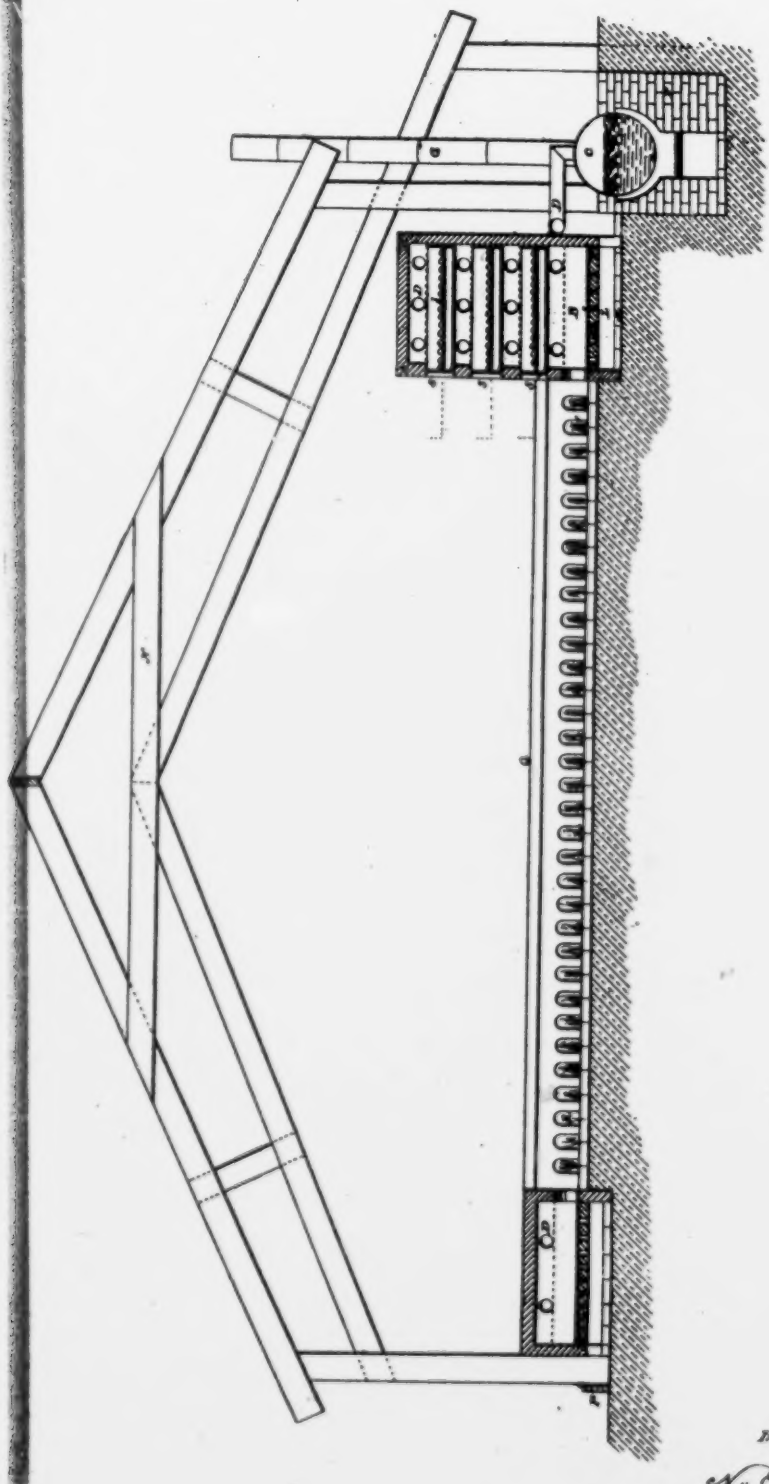

INVENTOR.

N. E. Guerin

UNITED STATES PATENT OFFICE.

NAPOLEON E. GUERIN, OF NEW YORK, N. Y.

HATCHING CHICKENS.

Specification of Letters Patent No. 3,019, dated March 30, 1843.

To all whom it may concern:

Be it known that I, NAPOLEON E. GUERIN, of the city of New York, county and State of New York, have invented an Artificial Method of Rearing Chickens; and I do hereby declare that the following is a full and exact description.

The nature of my invention consists in a method of rearing the chickens, after the hatching of the eggs, in an oven as herein described.

Several attempts have been made to hatch eggs by artificial means, and to rear the chickens thus produced. The first of these operations has been successful, but all efforts to rear the chickens have been hitherto fruitless; from the circumstances that those who made the experiments considered the chicken as an animal which was endowed with the faculties of locomotion and of sight, and was also enabled to partake of food from the moment of its birth, and under this impression all that was necessary, or deemed so, was to protect the young birds from the inclemency of the weather, and they were accordingly kept in heated apartments without air. Although the chicken is a bird which is easily reared, since it is able to eat, as it were, at the moment it breaks its shell, still it must be admitted that there are also certain requisites which are indispensable to its existence, namely, air and heat judiciously combined. If the attempts above alluded to had been effected by men of observation, residing in the country, they would have doubtless been more successful in their undertakings, as it is extremely probable that they would have observed the method adhered to by the farmer's wife, when by some mishap a newly hatched brood of chickens are deprived of the mother who would so faithfully have watched over them; a method it may be remarked which almost invariably succeeds, they are taken by the farmer's wife and placed in a loosely woven basket, in the bottom of which some fresh straw has previously been deposited, the whole being covered with cotton or wool, after which the basket is brought near the fire, where it is left for a fortnight and there receive the heat from it. If you ask these women the motive of this mode of treating the young chicken, they will merely answer that they do not know why this system is pursued in preference to any other, but that they have seen their mothers follow the same method and meet with similar success. A careful observer will at once perceive in this the way in which the hen's place may be adequately supplied; we always see the feet of the chickens on the ground which keeps them in a cool state, even when guarded by its parent, while the head and upper part of the body are warmed by the heat derived from the hen's body. Whether we ascribe the means employed by the farmer's wife, to chance as to a series of observations, it would be impossible to imitate nature more effectually, since the chicken obtains thus air from below and warmth from above.

Drawing No. I. Ground plan of a building for the artificial hatching of seven thousand five hundred eggs (7,500) and rearing the chicken during the first month of its existence.—A A A A, hatching oven with eight divisions, for the reception of twenty four drawers, three in each division and placed one above the other, each drawer to contain from three hundred and thirteen to three hundred and fourteen eggs (313 to 314). B B B B, nests for the chickens to sleep in; these are arranged along the whole apartment, the hatching oven being placed on the top of the nests on one side of the apartment. C the steam boiler. D D D D steam pipes for heating the oven and the upper part of the nests. E E E cross pieces to support the steam pipes. F mason work of the boiler. G, flue of the boiler. H stream of water which traverses the length of the building; this is to water the chickens and is kept very clean; it must be constantly renewed. The space between the four ranges of nests is paved with brick, and is used as a yard for the chickens.

Drawing No. II. Describes the length and height of the oven for hatching.—A sectional plan, or view of the oven according to the line O O of the ground plan, so as to admit of being seen in all its parts. B the nests under the oven. D steam pipes. There are nine of these in the oven, and they are placed by threes over each drawer; the heat does not bear directly upon the eggs; a piece of stout cotton duck is placed where there is a red painted line in the plan, which absorbs the heat at first and then gives it

out equally upon each drawer. I drawer to contain the eggs; this is divided in two parts by a mat supported by a netting whereby a vacant space is left between the eggs and the bottom of the drawer. Drawing No. III gives an explanation of this. J mat placed upon the bottom of the nests. K bottom of the nests; a number of irregular holes are bored in it, to admit fresh air to the mat where the chickens are. L conduit through which air enters from the exterior. M brick pavement of the conduit above mentioned. N woodwork of the building.

Drawing No. III. The oven for hatching viewed across, and the apartment where the chicken is kept during the first month.—The same letters refer to the same parts as those indicated in the preceding drawings. P valve to admit external air into the conduit already mentioned, and which conveys it under all the nests. It will be noticed that the holes bored in the bottom of the nests are of irregular dimensions; the smaller ones are nearer to the valve and the larger are the most distant from it; the object is to distribute the air equally under the mat. Q front view of one of the sides of the nests. R openings or doors for the ingress and egress of the chicken; these doors are concealed by split pieces of colored cotton or worsted stuffs. This arrangement allows the chicken to pass to and fro freely as it would have done under the care of the hen, by moving her feathers to one side or the other. S front view of the drawers for hatching with openings concealed as the preceding, by slit pieces of colored stuffs on a level corresponding with that of the mat. The dotted line shows the elongation added to each drawer the first day that the chickens are hatched. The black line or mark, on a level with the vacant space left between the mat and the bottom of the drawer, shows the holes which are unstopped on the same day to admit the air. The following explains this: The chicken must not be touched the first day nor even during half the second day that it is hatched. They are to remain in their respective drawers, the elongation or lengthening of the drawers forms a gallery where the young bird may take exercise, passing between the slit colored stuffs already mentioned the air which passes through the mat affords the means of respiration to those chickens who are not disposed to take exercise. The chickens become accustomed to the particular color of the stuff; they recognize it as the color of their parent. When the period has arrived for their removal from the drawers to the apartment where the nests are, they are not at a loss which nest to select, but proceed at once to that with which they have become familiarized. This shows that the color of each side of the nests must correspond to that of the drawers where the chickens were hatched.

Drawing No. IV. General plan of the buildings.—No. 1, room where the chickens are hatched and where they remain during the first month. The letters correspond to the preceding plan and point out the oven, the nests and the spot where the boiler is placed. No. 2, apartment where the chickens are kept during the second and third month; the nests are arranged around the whole room; they are no longer heated by the steam of the boiler but derive the necessary warmth from small furnaces placed at the four angles of the room, by means of which the water is heated for the steam to be conveyed by the conduits. This apartment is larger by half than room No. I and is situated to the right of room No. 1. No. 3, a similar apartment situated to the left of No. 1.

The hatching must be conducted so as to obtain a fresh brood as soon as the chickens are a month old. When they have obtained that age they are removed to the next room, in order that the newly hatched ones may occupy their place; for this purpose, sliding doors are placed Z Z and thus divide room No. 1 from Nos. 2 and 3. As soon as they are removed by this simple contrivance, the sliding door is replaced as before and the rooms are again separated. As soon as the chickens of the second hatching have remained one month in room No. 1, the sliding door is again withdrawn, but to pass them in room No. 3. The heat in the nests of No. 2 begins now to be progressively diminished and small perches are placed in the room, for many chickens at that age, prefer to roost rather than to sleep in the nests. The third set of eggs having been hatched, the chickens of No. 2 are by this time three months old, and are therefore of a proper age to be transferred to the yard with roosting places; the small perches are then removed to room No. 3, where the chickens are now two months old. The chickens of the third set of eggs are now removed to No. 2, those of the fourth set to No. 3, and so on during the year. Thus it will be seen that the chickens are not removed to the yard before they are three months old; the heat during the third month which has been gradually diminishing and the perches to which they have become accustomed enables them to bear the change or removal to the yards where they are to remain until they are sold.

X X large roosting places, built at the two ends of the building; they are divided lengthwise in two parts and the yard is similarly partitioned off so as to contain chickens of the same age, in order that when the time of selling them arrives, it may be

easy to select from any brood. Without this precaution it would be impossible to make a proper selection.

What I claim as my invention, and desire to secure by Letters Patent, is:

1. The mode of giving and distributing the heat derived from the steam pipes, as well upon the eggs in the hatching oven, as upon the chickens in the nests.

2. The plan of making the colors of the slit pieces of cotton or worsted stuff of the hatching drawers correspond with the sides of the nests in the apartments where similar slit pieces are used.

3. The elongation or lengthening of the drawers, and admitting of air at the moment the birds break their shells.

4. The mode of purifying the air under the nests by the admitting of vital air during the three first
existence and befo
without danger.

5. The method o
two apartments, o
other on the left si
the hatching takes
thus be continued

6. Finally, the
tions and the mod
new arrangement
have not, to my
adopted in any o
artificial hatching
has been attempte

In witness of—

Edw. Baye
Laurence E

n drawer. I drawer
his is divided in two
ported by a netting
e is left between the
f the drawer. Draw-
explanation of this.
bottom of the nests.
; a number of irregu-
it, to admit fresh air
chickens are. L con-
r enters from the ex-
ment of the conduit
oodwork of the build-

The oven for hatching
apartment where the
the first month.—The
e same parts as those
eding drawings. P
l air into the conduit
nd which conveys it
t will be noticed that
bottom of the nests
ions; the smaller ones
e and the larger are
it; the object is to
ally under the mat.
of the sides of the
doors for the ingress
ken; these doors are
ces of colored cotton
s arrangement allows
and fro freely as it
r the care of the hen,
rs to one side or the
of the drawers for
concealed as the pre-
f colored stuffs on a
th that of the mat.
the elongation added
t day that the chick-
lack line or mark, on
t space left between
of the drawer, shows
stopped on the same
The following ex-
must not be touched
during half the sec-
hed. They are to re-
drawers, the elonga-
the drawers forms
oung bird may take
een the slit colored
ned the air which
t affords the means
chickens who are not
se. The chickens be-
particular color of
ze it as the color of
e period has arrived
the drawers to the
ests are, they are not
select, but proceed at
h they have become
ws that the color of
each side of the nests must correspond to that of the drawers where the chickens were hatched.

Drawing No. IV. General plan of the buildings.—No. 1, room where the chickens are hatched and where they remain during the first month. The letters correspond to the preceding plan and point out the oven, the nests and the spot where the boiler is placed. No. 2, apartment where the chickens are kept during the second and third month; the nests are arranged around the whole room; they are no longer heated by the steam of the boiler but derive the necessary warmth from small furnaces placed at the four angles of the room, by means of which the water is heated for the steam to be conveyed by the conduits. This apartment is larger by half than room No. I and is situated to the right of room No. 1. No. 3, a similar apartment situated to the left of No. 1.

The hatching must be conducted so as to obtain a fresh brood as soon as the chickens are a month old. When they have obtained that age they are removed to the next room, in order that the newly hatched ones may occupy their place; for this purpose, sliding doors are placed Z Z and thus divide room No. 1 from Nos. 2 and 3. As soon as they are removed by this simple contrivance, the sliding door is replaced as before and the rooms are again separated. As soon as the chickens of the second hatching have remained one month in room No. 1, the sliding door is again withdrawn, but to pass them in room No. 3. The heat in the nests of No. 2 begins now to be progressively diminished and small perches are placed in the room, for many chickens at that age, prefer to roost rather than to sleep in the nests. The third set of eggs having been hatched, the chickens of No. 2 are by this time three months old, and are therefore of a proper age to be transferred to the yard with roosting places; the small perches are then removed to room No. 3, where the chickens are now two months old. The chickens of the third set of eggs are now removed to No. 2, those of the fourth set to No. 3, and so on during the year. Thus it will be seen that the chickens are not removed to the yard before they are three months old; the heat during the third month which has been gradually diminishing and the perches to which they have become accustomed enables them to bear the change or removal to the yards where they are to remain until they are sold.

X X large roosting places, built at the two ends of the building; they are divided lengthwise in two parts and the yard is similarly partitioned off so as to contain chickens of the same age, in order that when the time of selling them arrives, it may be

easy to select from any brood. Without this precaution it would be impossible to make a proper selection.

What I claim as my invention, and desire to secure by Letters Patent, is:

1. The mode of giving and distributing the heat derived from the steam pipes, as well upon the eggs in the hatching oven, as upon the chickens in the nests.

2. The plan of making the colors of the slit pieces of cotton or worsted stuff of the hatching drawers correspond with the sides of the nests in the apartments where similar slit pieces are used.

3. The elongation or lengthening of the drawers, and admitting of air at the moment the birds break their shells.

4. The mode of purifying the air under the nests by the admitting of vital air during the three first months of the chicken's existence and before it can live in open yards without danger.

5. The method of keeping the chickens in two apartments, one on the right and the other on the left side, of the apartment where the hatching takes place and where it may thus be continued without any interruption.

6. Finally, the drawings, the specifications and the model explain and show these new arrangements or dispositions, which have not, to my knowledge, been used or adopted in any of the countries where the artificial hatching and rearing of chickens has been attempted.

N. E. GUERIN.

In witness of—
EDW. BAYER,
LAURENCE KENNEDY.

(No Model.) 2 Sheets—Sheet 2.

758

E. H. JOHNSON.

ELECTRICAL APPARATUS FOR HEATING AND COOLING BUILDINGS.

No. 360,223. Patented Mar. 29, 1887.

Fig 2

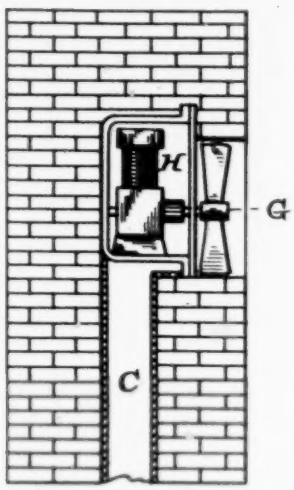

Fig 3

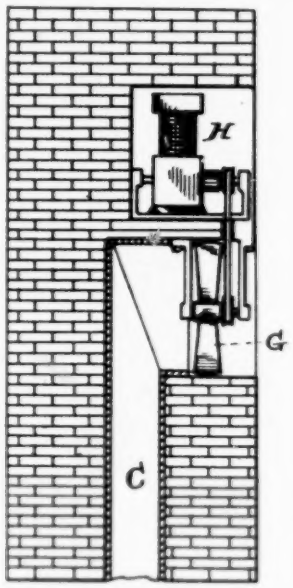

Fig 4.

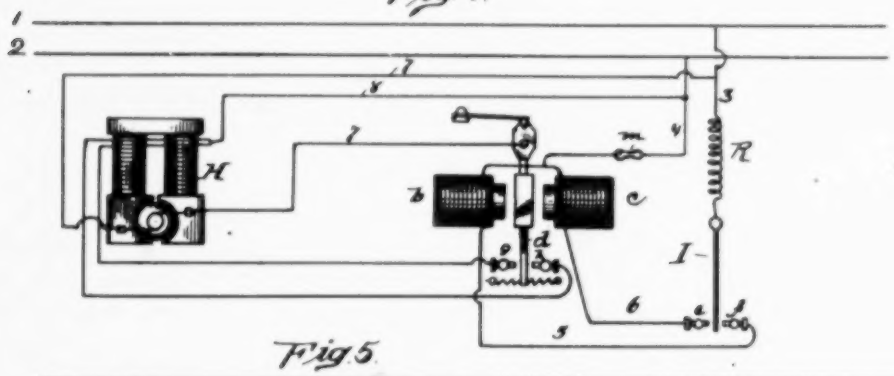

Fig 5.

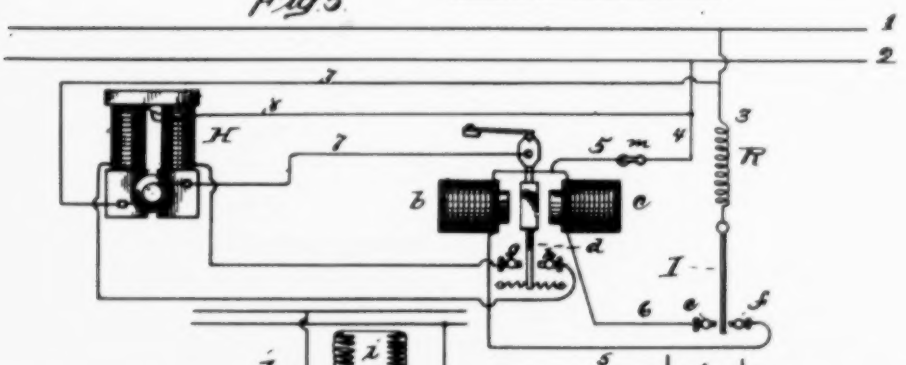

Fig 6.

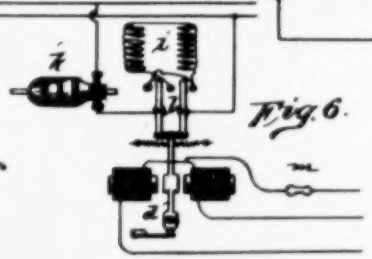

ATTEST:

E. C. Rowland

Wm. Pelger

INVENTOR:

Edward H. Johnson

By Dyer & Story

Atty

760 (No Model.) 2 Sheets—Sheet 1.

E. H. JOHNSON.

ELECTRICAL APPARATUS FOR HEATING AND COOLING BUILDINGS.

No. 360,223. Patented Mar. 29, 1887.

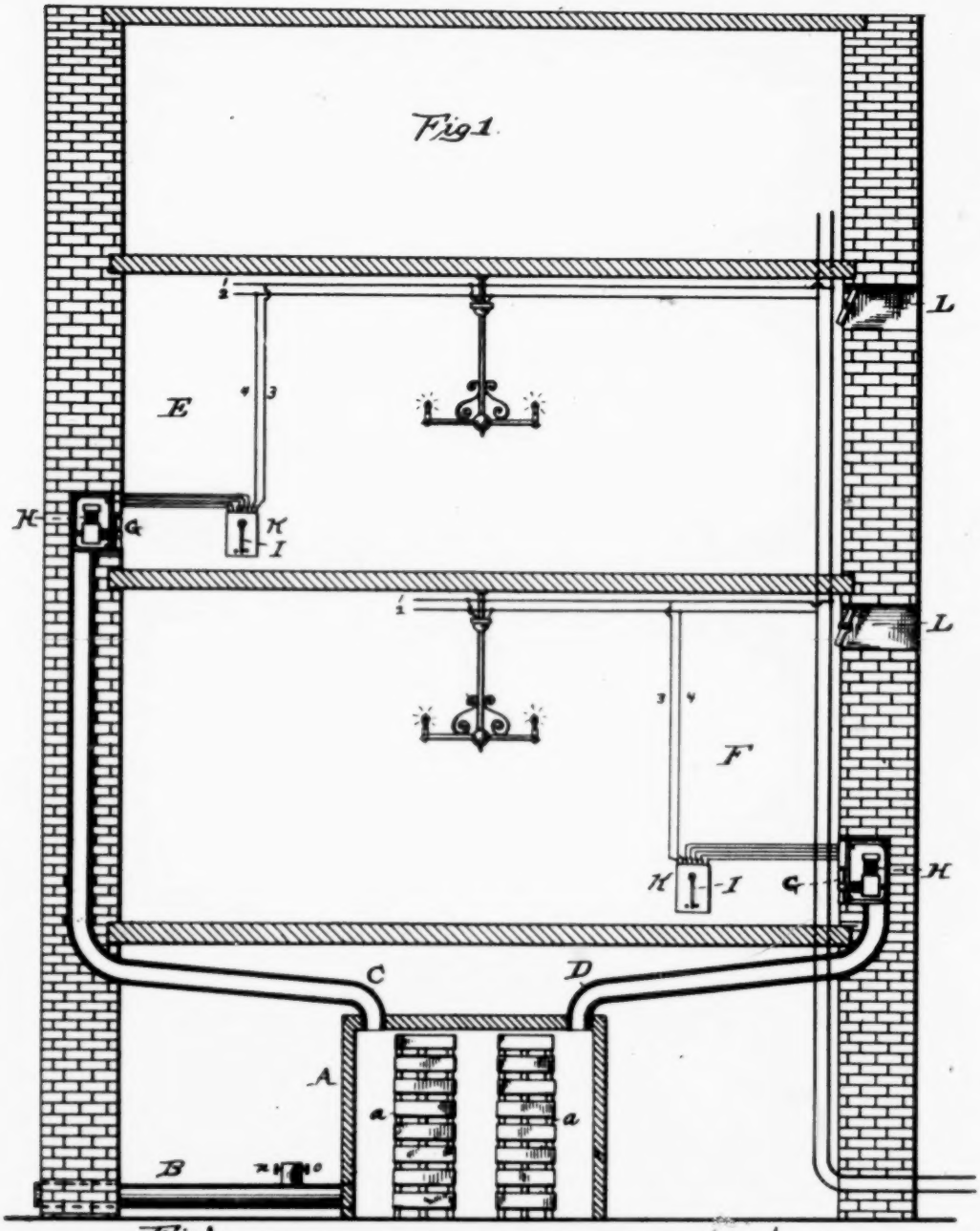

Fig 7.

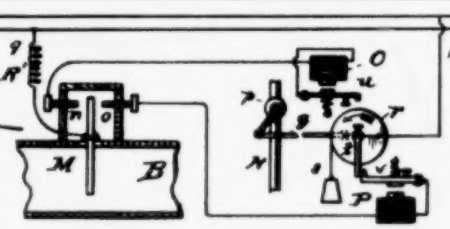

ATTEST:

E. H. Rowland

Wm. Pelzer

INVENTOR:

Edward H. Johnson

By Dyer & Lindsey

attys

UNITED STATES PATENT C

EDWARD H. JOHNSON, OF NEW YORK, N. Y

ELECTRICAL APPARATUS FOR HEATING AND COOLING BUILD

SPECIFICATION forming part of Letters Patent No. 360,223, dated

Application filed October 8, 1868. Serial No. 215,651. (No model.)

To all whom it may concern:

Be it known that I, EDWARD H. JOHNSON, of New York city, in the county and State of New York, have invented a certain new and useful Improvement in Apparatus for Heating and Cooling Buildings, of which the following is a specification.

The object I have in view is to produce a simple, efficient, and economical apparatus for automatically maintaining the desired temperature in the rooms of a building. The apparatus is designed to be controlled and operated electrically. It responds independently to changes in temperature in the separate rooms, floors, or other divisions of a building, and it produces a complete circulation of the heated or cooled air from one part of the building to another, so that an excess of heat or cold in one part will be utilized in other parts of the building where the opposite condition exists.

It is also designed to be economical in the use of power, to prevent waste when there is an excess of heat or cold.

In carrying out the invention I use the ordinary piping extending from the several rooms of a building to a heating or cooling chamber in the cellar, which chamber is in turn connected by a pipe with the atmosphere outside of the building for supplying fresh air to the heating or cooling chamber, from whence it is delivered to the rooms of the building. At the ends of the air-pipes where they open into the rooms are located revolving fans or blowers capable of movement in opposite directions, so that air may be caused to circulate from the pipes into the rooms or from the rooms into the pipes. Each of these fans is revolved by an electric motor, and the motor is controlled by a thermostat located in the same room.

The rooms may have ventilators connecting with the external atmosphere, or the openings such as exist around windows and doors may be depended upon to supply external air to a room when its fan is drawing air from the room and forcing it down the air-pipes. The thermostat located in the room is adjusted to maintain the temperature within certain limits. Within these limits the motor is at rest; but when either limit is reached the thermostat closes a circuit to intermediate electric apparatus, which closes the motor-circuit and causes the motor to revolve. When the thermostat assumes a central positi circuit is broken and the intermediate electric ap motor, as well as opens so that the deflection of posite directions produce of the motor and the fan building is lighted by e current for operating the trolling devices may be tric-lighting circuit at a tric-light switches, if any current will be supplied drawn from a room and f is returned to the heating the cellar, and after be cooled passes from ther to other rooms of the h or cold already stored utilized. If more air is the heating or cooling ing therefrom into the surplus will be forced o into the external atmos

A simple hand-switc each motor to prevent i

Advantage is taken travels in both directio to provide the apparat matically controlling cold to the radiators in chamber, so as to prev swinging vane is intro pipe, and by its move controls electric circu vices for controlling cold to the radiators.

In the accompanyi part hereof, Figure 1 is part of a house showin thereto; Fig. 2, a detail on a larger scale the loc at the end of an air-pip illustrating the motor and placed above the Figs. 4, 5, and 6 are vi gram, showing the co mostat, the motor, an paratus; and Fig. 7, a illustrating the device ply of heat or cold to chamber.

A is a heating or

2 Sheets—Sheet 1.

E. H. JOHNSON.

APPARATUS FOR HEATING AND COOLING BUILDINGS.

No. 360,383. Patented Mar. 29, 1887.

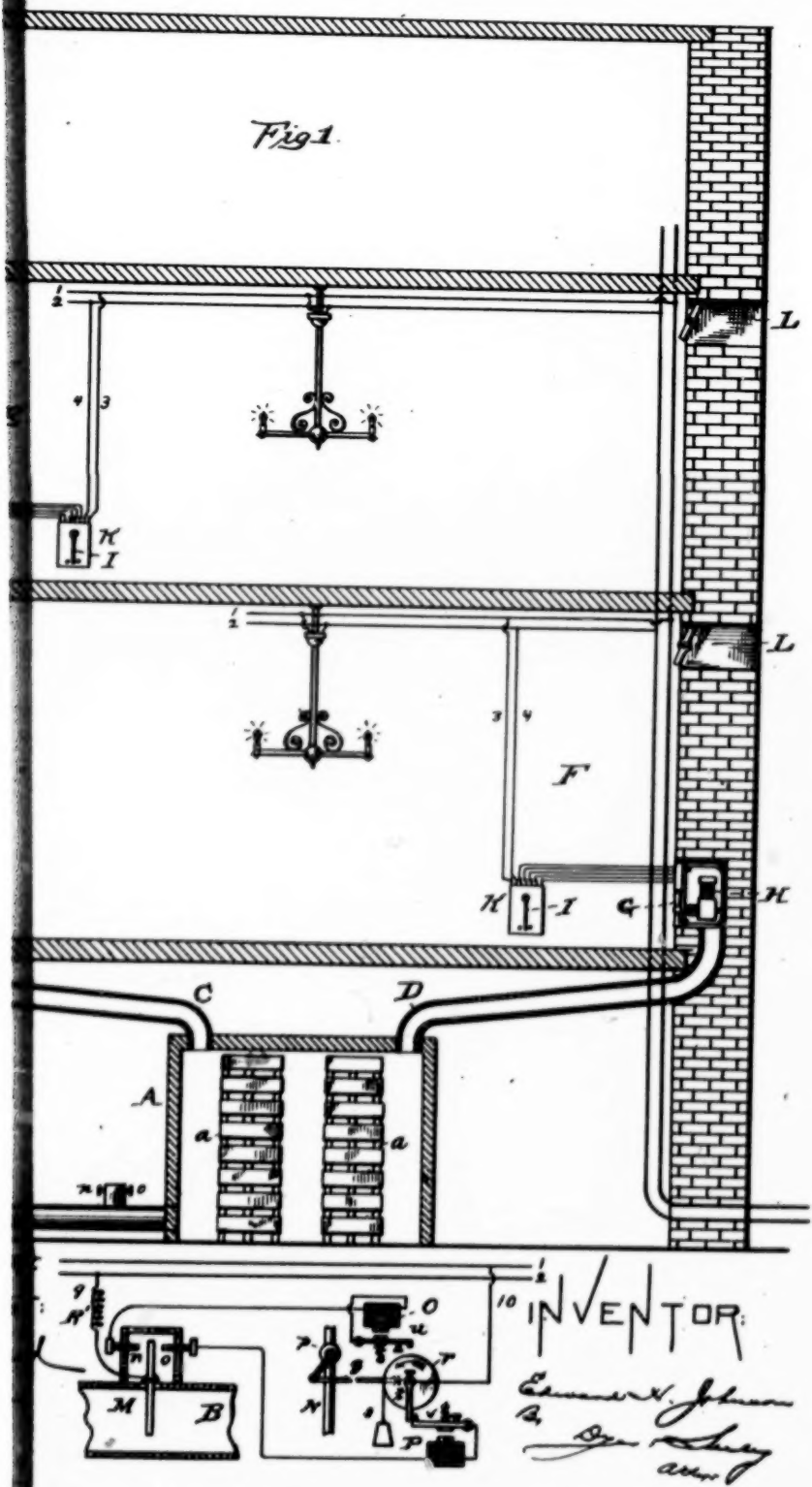

UNITED STATES PATENT OFFICE.

EDWARD H. JOHNSON, OF NEW YORK, N. Y.

ELECTRICAL APPARATUS FOR HEATING AND COOLING BUILDINGS.

SPECIFICATION forming part of Letters Patent No. 360,223, dated March 29, 1887.

Application filed October 8, 1886. Serial No. 215,651. (No model.)

To all whom it may concern:

Be it known that I, EDWARD H. JOHNSON, of New York city, in the county and State of New York, have invented a certain new and useful Improvement in Apparatus for Heating and Cooling Buildings, of which the following is a specification.

The object I have in view is to produce a simple, efficient, and economical apparatus for automatically maintaining the desired temperature in the rooms of a building. The apparatus is designed to be controlled and operated electrically. It responds independently to changes in temperature in the separate rooms, floors, or other divisions of a building, and it produces a complete circulation of the heated or cooled air from one part of the building to another, so that an excess of heat or cold in one part will be utilized in other parts of the building where the opposite condition exists.

It is also designed to be economical in the use of power, to prevent waste when there is an excess of heat or cold.

In carrying out the invention I use the ordinary piping extending from the several rooms of a building to a heating or cooling chamber in the cellar, which chamber is in turn connected by a pipe with the atmosphere outside of the building for supplying fresh air to the heating or cooling chamber, from whence it is delivered to the rooms of the building. At the ends of the air-pipes where they open into the rooms are located revolving fans or blowers capable of movement in opposite directions, so that air may be caused to circulate from the pipes into the rooms or from the rooms into the pipes. Each of these fans is revolved by an electric motor, and the motor is controlled by a thermostat located in the same room.

The rooms may have ventilators connecting with the external atmosphere, or the openings such as exist around windows and doors may be depended upon to supply external air to a room when its fan is drawing air from the room and forcing it down the air-pipes. The thermostat located in the room is adjusted to maintain the temperature within certain limits. Within these limits the motor is at rest; but when either limit is reached the thermostat closes a circuit to intermediate electric apparatus, which closes the motor-circuit and causes the motor to revolve. When the thermostat assumes a central position again, the motor-circuit is broken and the motor stopped. The intermediate electric apparatus reverses the motor, as well as opens and closes its circuit, so that the deflection of the thermostat in opposite directions produces opposite movements of the motor and the fan driven by it. If the building is lighted by electricity, the electric current for operating the motors and their controlling devices may be taken from the electric-lighting circuit at a point beyond the electric-light switches, if any are used, so that the current will be supplied at all times. The air drawn from a room and forced into the air-pipe is returned to the heating or cooling chamber in the cellar, and after being further heated or cooled passes from thence into pipes leading to other rooms of the house, so that the heat or cold already stored up in the air will be utilized. If more air is being forced back into the heating or cooling chamber than is passing therefrom into the rooms of the house, the surplus will be forced out of the fresh-air duct into the external atmosphere.

A simple hand-switch may be provided for each motor to prevent its action when desired.

Advantage is taken of the fact that the air travels in both directions in the fresh-air pipe to provide the apparatus with means for automatically controlling the supply of heat or cold to the radiators in the heating or cooling chamber, so as to prevent waste of power. A swinging vane is introduced into the fresh-air pipe, and by its movements back and forth controls electric circuits, which include devices for controlling the supply of heat or cold to the radiators.

In the accompanying drawings, forming a part hereof, Figure 1 is a sectional elevation of part of a house showing my apparatus applied thereto; Fig. 2, a detail sectional view showing on a larger scale the location of a fan and motor at the end of an air-pipe; Fig. 3, a similar view illustrating the motor separated from the fan and placed above the mouth of the air-pipe. Figs. 4, 5, and 6 are views, principally in diagram, showing the connections of the thermostat, the motor, and the intermediate apparatus; and Fig. 7, a view, partly in diagram, illustrating the devices for controlling the supply of heat or cold to the heating or cooling chamber.

A is a heating or cooling chamber or box

located in the cellar or basement of the building. It is shown as provided with radiators *a*, through which a heating medium—such as steam—or a cooling medium—such as water—may be passed; or this chamber A may be the air-chamber of a hot-air furnace. A fresh-air pipe or duct, B, leads from the chamber A to a point outside the building. From the chamber A also leads the air pipes or ducts C D, leading to the rooms E F. At the open upper end of each room-pipe is placed a revolving fan, G, which is driven by an electric motor, H, capable of revolving in opposite directions.

The motor may carry the fan directly on its shaft and be located with the fan in the open end of the pipe, as shown in Figs. 1 and 2, or the motor may be in a box above, below, or to one side of the air-pipe and be connected with the fan by an endless cord, as shown in Fig. 3.

I is the thermostat, and K is the intermediate apparatus, of which there is one of each for each motor. The intermediate apparatus in Fig. 1 is inclosed in the boxes upon which the thermostats are mounted, and in or upon which the electric connections between the thermostat and the intermediate apparatus are made. In Figs. 4 to 6 such intermediate apparatus is disclosed. It is composed of two electro magnets, *b c*, between which is a pivoted armature-lever, *d*, held normally in a central position. The thermostat is located in a circuit, 3 4, from a suitable source of electrical energy. This is preferably the electric-lighting circuit 1 2, a resistance, R, being used to reduce the flow of current. At the contacts *e f* of the thermostat the circuit 1 2 is divided into branches 5 and 6, the branch 5 including the magnet *b*, while the branch 6 includes the magnet *c*. In Figs. 4 and 5 the armature-lever *d* plays between simple contacts *g h*. From the circuit 3 4, or directly from 1 2, is taken the motor-circuit 7 8. Conductor 7 extends to the motor-armature and from thence to the pivot of the lever *d*. At the contacts *g h* this circuit is divided, the branches including oppositely-wound sections of the motor field-magnet, as in Fig. 4, or one branch including one leg of the field-magnet and the other branch the other leg, as in Fig. 5. The conductor 8 extends from the joined ends of the oppositely-wound field-magnet sections, Fig. 4, or from the field-wire when it passes from one leg to the other of the field-magnet, Fig. 5.

In Fig. 6 the field-magnet coils of the motor are shown at *i* and the motor-armature at *k*. The lever *d* is shown as working a two-arm reversing device, *l*, reversing the connections of the field-magnet coils, and also serving to make and break the entire motor-circuit. In all three instances of intermediate apparatus the motor-armature and field-magnet are located in series in the same circuit, so as to get the advantage of their combined resistance, and the motor is reversed by reversing the polarity of its field-magnet. The reversing apparatus also serves to open the motor-circuit. The peculiar intermediate apparatus shown in Figs. 4 and 5 possesses the advantage of only requiring the use of simple contact-points; but it has the disadvantage as compared with the apparatus of Fig. 6 of not bringing all the wires of the field-magnet into circuit at one time.

When a thermostat closes circuit at *e* or *f*, the magnet *b* or *c* is brought into circuit, and closes the motor-circuit with such a polarity to the field-magnet that the motor will revolve in one or the other direction, according to whether the thermostat closes on *e* or on *f*. The motor will revolve the fan, which will deliver heated or cooled air to the room or draw air from the room, the loss in the latter case being supplied through a ventilator, L, or through the openings around windows and doors. This operation will continue until the temperature is changed to the necessary extent, when the thermostat will break the circuit to the intermediate apparatus, and this, in turn, will break the motor-circuit. The air drawn from one room will be driven back into the heating or cooling chamber, and from thence distributed to other rooms or forced out of the fresh-air duct.

A simple hand-switch, *m*, Figs. 4, 5, and 6, is included in the thermostat-circuit 3 4, so that when desired the apparatus may be made inoperative by breaking the thermostat-circuit. To control the supply of heat or cold to the radiators *a* in the chamber A and prevent waste of power, advantage is taken of the fact that when there is an excess in the supply of heat or cold to the radiators air will be forced out of the fresh-air pipe B, and under the opposite conditions air will be drawn in through said pipe. A swinging vane, M, is introduced into the fresh-air pipe B, Fig. 7. When this vane hangs vertically, it stands centrally between contact-points *n o*, and out of contact with such points. The pipe N supplies the heating or cooling medium to the radiators *a*, and is provided with a cock, *p*, which is opened and closed by a pitman-bar, *q*, extending to a wheel, *r*, which wheel is turned by a clock-train, represented by the weight *s*; or any other form of motor can be employed for this purpose. An arm, *t*, on the same shaft as the wheel *r*, is intercepted by the armature-levers *u v* of two electro-magnets, O P, such armature-levers being located at diametrically-opposite points, so as to stop the wheel *r* at each half-revolution.

From the electric-lighting circuit 1 2 is taken the circuit 9 10, which passes to the pivot of vane M and extends in two branches from the contact-screws *n o* to the magnets O P, from thence to the armature-levers *u v* of such magnets, and then by a common return from the shaft of wheel *r* to the other side of the circuit 1 2. A resistance, R', may be included in the circuit 9 10, if desired. The cock *p* is shown as open. When the vane M is swung by an

outflowing current of air, it makes contact at *o* and closes circuit to the magnet P, which releases the wheel *r*, and this wheel turns until the arm *t* is intercepted by the lever *s* of the magnet O. This half-revolution of the wheel draws the pitman to the other side of the wheel and closes the cock, cutting off the supply of the heating or cooling medium to the radiators *a*. When the vane swings in the other direction, it will make contact at *n* and close circuit to the magnet O, when the wheel *r* will be again released, opening the cock *p*, and the parts will again assume the position shown. By extending the circuits of the magnets O P through their armature-levers the circuit to each magnet can be completed only when the revolving arm *t* is in contact with its armature-levers. Hence, each magnet has its circuit broken as soon as it releases the arm *t*, and a waste of current is prevented. The vane M can be made as sensitive as desired by constructing the part above the pivot of nearly the same weight as the part below the pivot, and by properly proportioning the relative weight of these parts the precise action desired can be secured; or a balanced revolving vane could be used, if desired.

What I claim is—

1. The combination, with an air pipe, duct, or flue delivering air to a room in a building, of a fan or blower located within said pipe, an electric motor operating the same, and a thermostat controlling such motor, substantially as set forth.

2. The combination, with an air pipe, duct, or flue delivering air to a room in a building, of a fan or blower located within said pipe, an electric motor operating the same, an intermediate electric apparatus directly controlling the motor-circuit, and a thermostat opening and closing circuit to such intermediate apparatus, substantially as set forth.

3. The combination, with an air pipe, duct, or flue delivering hot or cold air to a room, of a fan or blower located within such pipe and capable of reverse movements, so as to force air into or draw it from the room, and devices controlled by changes in temperature in the room and acting to work such fan or blower in opposite directions, substantially as set forth.

4. The combination, with two or more air pipes, ducts, or flues extending to different rooms of a building, and a common hot or cold air-chamber from which such pipes extend, of a fan or blower located within each of such pipes and capable of reverse movements, so as to force air into or draw it from the room, and devices for each fan controlled by changes in temperature and acting to work such fan or blower in opposite directions, substantially as set forth.

5. The combination, with an air pipe, duct, or flue delivering hot or cold air to a room, of a fan or blower within such pipe capable of movement in opposite directions, an electric motor driving such fan, an intermediate circuit controlling and reversing apparatus for such motor, and a therm
circuit to such intermed
stantially as set forth.

6. The combination, w
maintaining fan, of the e
the same, and having its
magnet coils in series, a
tric apparatus acting to
motor-circuit and to rev
of its field-magnet coils
controlling the circuit of
paratus, substantially as

7. The combination, w
maintaining fan, the elec
mediate apparatus, and
electric-lighting circuit, a
from to such devices, sub

8. The combination, w
maintaining fan, the ele
mediate apparatus, the
tric connections for su
with current for auto
hand-switch for renderi
erative, substantially as

9. The combination, w
ing chamber, air-pipes
the rooms of the buildi
leading to such chambe
moved by the air curr
means controlled by the
fresh-air pipe and actin
of the heating or cooling
ber, substantially as set

10. The combination,
ing chamber, air-pipes
the rooms of the build
controlled motors opera
force air into or draw
a fresh-air pipe leadin
having a vane moved
such pipe, of means co
rents in such fresh-air
trol the supply of the
dium to such chambe
forth.

11. The combinatio
cooling chamber and t
moving vane in such p
the supply of the heat
to such chamber, and e
trolled by the vane for
substantially as set for

12. The combination
the vane therein, an
wheel revolved by a n
stop-arm, and the two
their circuits extendi
tures and said revolv
the circuit of each mag
releasing such stop-ar
forth.

This specification si
6th day of October. 18

ED

Witnesses:
RICHD. N. DY
WM. PELZER.

basement of the build-
vided with radiators
ing medium—such as
ium—such as water—
chamber A may be the
furnace. A fresh air
om the chamber A to
ing. From the cham-
r pipes or ducts C D,
. At the open upper
is placed a revolving
by an electric motor,
n opposite directions.
the fan directly on its
h the fan in the open
n in Figs. 1 and 2, or
box above, below, or
pe and be connected
ess cord, as shown in

d K is the interme-
h there is one of each
termediate apparatus
he boxes upon which
nted, and in or upon
ections between the
ermediate apparatus
6 such intermediate
It is composed of two
een which is a pivoted
normally in a central
at is located in a cir-
ource of electrical en-
y the electric-lighting
R, being used to re-
At the contacts *e f*
ircuit 1 2 is divided
e branch 5 including
branch 6 includes the
d 5 the armature-le-
le contacts *g h*. From
y from 1 2, is taken
Conductor 7 extends
d from thence to the
the contacts *g h* this
anches including op-
of the motor field-
ne branch including
and the other branch
5. The conductor 8
ds of the oppositely-
ions, Fig. 4, or from
sses from one leg to
net, Fig. 5.
net coils of the motor
notor-armature at *k*.
working a two-arm
sing the connections
and also serving to
e motor-circuit. In
ermediate apparatus
field-magnet are lo-
e circuit, so as to get
ombined resistance,
d by reversing the
net. The reversing apparatus also serves to open the motor-circuit. The peculiar intermediate apparatus shown in Figs. 4 and 5 possesses the advantage of only requiring the use of simple contact-points; but it has the disadvantage as compared with the apparatus of Fig. 6 of not bringing all the wires of the field-magnet into circuit at one time.

When a thermostat closes circuit at *e* or *f*, the magnet *b* or *c* is brought into circuit, and closes the motor-circuit with such a polarity to the field-magnet that the motor will revolve in one or the other direction, according to whether the thermostat closes on *e* or on *f*. The motor will revolve the fan, which will deliver heated or cooled air to the room or draw air from the room, the loss in the latter case being supplied through a ventilator, L, or through the openings around windows and doors. This operation will continue until the temperature is changed to the necessary extent, when the thermostat will break the circuit to the intermediate apparatus, and this, in turn, will break the motor-circuit. The air drawn from one room will be driven back into the heating or cooling chamber, and from thence distributed to other rooms or forced out of the fresh-air duct.

A simple hand-switch, *m*, Figs. 4, 5, and 6, is included in the thermostat-circuit 3 4, so that when desired the apparatus may be made inoperative by breaking the thermostat-circuit. To control the supply of heat or cold to the radiators *a* in the chamber A and prevent waste of power, advantage is taken of the fact that when there is an excess in the supply of heat or cold to the radiators air will be forced out of the fresh-air pipe B, and under the opposite conditions air will be drawn in through said pipe. A swinging vane, M, is introduced into the fresh-air pipe B, Fig. 7. When this vane hangs vertically, it stands centrally between contact-points *n o*, and out of contact with such points. The pipe N supplies the heating or cooling medium to the radiators *a*, and is provided with a cock, *p*, which is opened and closed by a pitman-bar, *q*, extending to a wheel, *r*, which wheel is turned by a clock-train, represented by the weight *s*; or any other form of motor can be employed for this purpose. An arm, *l*, on the same shaft as the wheel *r*, is intercepted by the armature-levers *n e* of two electro-magnets, O P, such armature-levers being located at diametrically-opposite points, so as to stop the wheel *r* at each half-revolution.

From the electric-lighting circuit 1 2 is taken the circuit 9 10, which passes to the pivot of vane M and extends in two branches from the contact-screws *n o* to the magnets O P, from thence to the armature-levers *n e* of such magnets, and then by a common return from the shaft of wheel *r* to the other side of the circuit 1 2. A resistance, R', may be included in the circuit 9 10, if desired. The cock *p* is shown as open. When the vane M is swung by an

outflowing current of air, it makes contact at *o* and closes circuit to the magnet P, which releases the wheel *r*, and this wheel turns until the arm *t* is intercepted by the lever *s* of the magnet O. This half-revolution of the wheel draws the pitman to the other side of the wheel and closes the cock, cutting off the supply of the heating or cooling medium to the radiators *a*. When the vane swings in the other direction, it will make contact at *n* and close circuit to the magnet O, when the wheel *r* will be again released, opening the cock *p*, and the parts will again assume the position shown. By extending the circuits of the magnets O P through their armature-levers the circuit to each magnet can be completed only when the revolving arm *t* is in contact with its armature-levers. Hence, each magnet has its circuit broken as soon as it releases the arm *t*, and a waste of current is prevented. The vane M can be made as sensitive as desired by constructing the part above the pivot of nearly the same weight as the part below the pivot, and by properly proportioning the relative weight of these parts the precise action desired can be secured; or a balanced revolving vane could be used, if desired.

What I claim is—

1. The combination, with an air pipe, duct, or flue delivering air to a room in a building, of a fan or blower located within said pipe, an electric motor operating the same, and a thermostat controlling such motor, substantially as set forth.

2. The combination, with an air pipe, duct, or flue delivering air to a room in a building, of a fan or blower located within said pipe, an electric motor operating the same, an intermediate electric apparatus directly controlling the motor-circuit, and a thermostat opening and closing circuit to such intermediate apparatus, substantially as set forth.

3. The combination, with an air pipe, duct, or flue delivering hot or cold air to a room, of a fan or blower located within such pipe and capable of reverse movements, so as to force air into or draw it from the room, and devices controlled by changes in temperature in the room and acting to work such fan or blower in opposite directions, substantially as set forth.

4. The combination, with two or more air pipes, ducts, or flues extending to different rooms of a building, and a common hot or cold air-chamber from which such pipes extend, of a fan or blower located within each of such pipes and capable of reverse movements, so as to force air into or draw it from the room, and devices for each fan controlled by changes in temperature and acting to work such fan or blower in opposite directions, substantially as set forth.

5. The combination, with an air pipe, duct, or flue delivering hot or cold air to a room, of a fan or blower within such pipe capable of movement in opposite directions, an electric motor driving such fan, an intermediate circuit controlling and reversing apparatus for such motor, and a thermostat controlling the circuit to such intermediate apparatus, substantially as set forth.

6. The combination, with the temperature-maintaining fan, of the electric motor driving the same, and having its armature and field-magnet coils in series, an intermediate electric apparatus acting to make and break the motor-circuit and to reverse the connections of its field-magnet coils, and the thermostat controlling the circuit of the intermediate apparatus, substantially as set forth.

7. The combination, with the temperature-maintaining fan, the electric motor, the intermediate apparatus, and the thermostat, of an electric lighting circuit, and connections therefrom to such devices, substantially as set forth.

8. The combination, with the temperature-maintaining fan, the electric motor, the intermediate apparatus, the thermostat, and electric connections for supplying such devices with current for automatic operation, of a hand-switch for rendering said devices inoperative, substantially as set forth.

9. The combination, with a heating or cooling chamber, air-pipes leading therefrom to the rooms of the building, and a fresh-air pipe leading to such chamber and having a vane moved by the air currents in such pipe, of means controlled by the air currents in such fresh-air pipe and acting to control the supply of the heating or cooling medium to such chamber, substantially as set forth.

10. The combination, with a heating or cooling chamber, air-pipes leading therefrom to the rooms of the building, thermostatically-controlled motors operating fans which act to force air into or draw it from the rooms, and a fresh-air pipe leading to such chamber and having a vane moved by the air-currents in such pipe, of means controlled by the air-currents in such fresh-air pipe and acting to control the supply of the heating or cooling medium to such chamber, substantially as set forth.

11. The combination, with the heating or cooling chamber and the fresh-air pipe, of the moving vane in such pipe, a valve controlling the supply of the heating or cooling medium to such chamber, and electric connections controlled by the vane for operating such valve, substantially as set forth.

12. The combination, with the fresh-air pipe, the vane therein, and the valve-operating wheel revolved by a motor, of the revolving stop-arm, and the two electro-magnets having their circuits extending through their armatures and said revolving stop-arm, whereby the circuit of each magnet will be opened after releasing such stop-arm, substantially as set forth.

This specification signed and witnessed this 6th day of October, 1896.

EDWD. H. JOHNSON.

Witnesses:
RICHD. N. DYER,
WM. PELZER.

(No Model.) 2 Sheets—Sheet 2.

766

J. K. PROCTOR & J. H. KNOWLES.

DRYING MACHINE.

No. 426,321. Patented Apr. 22, 1890.

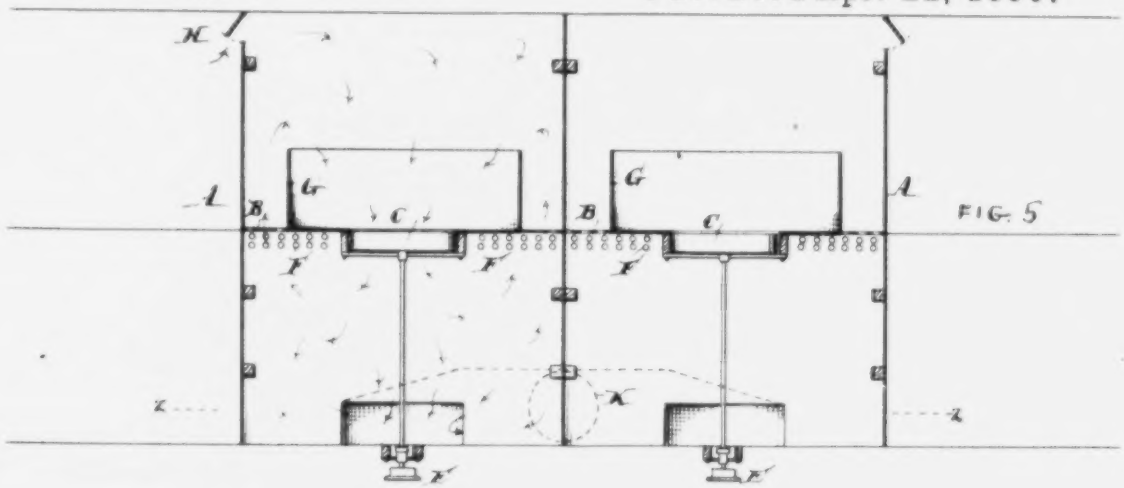

FIG. 5

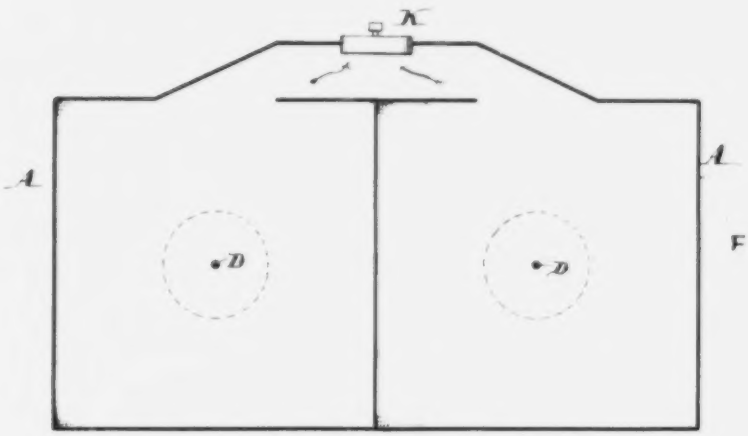

FIG. 6

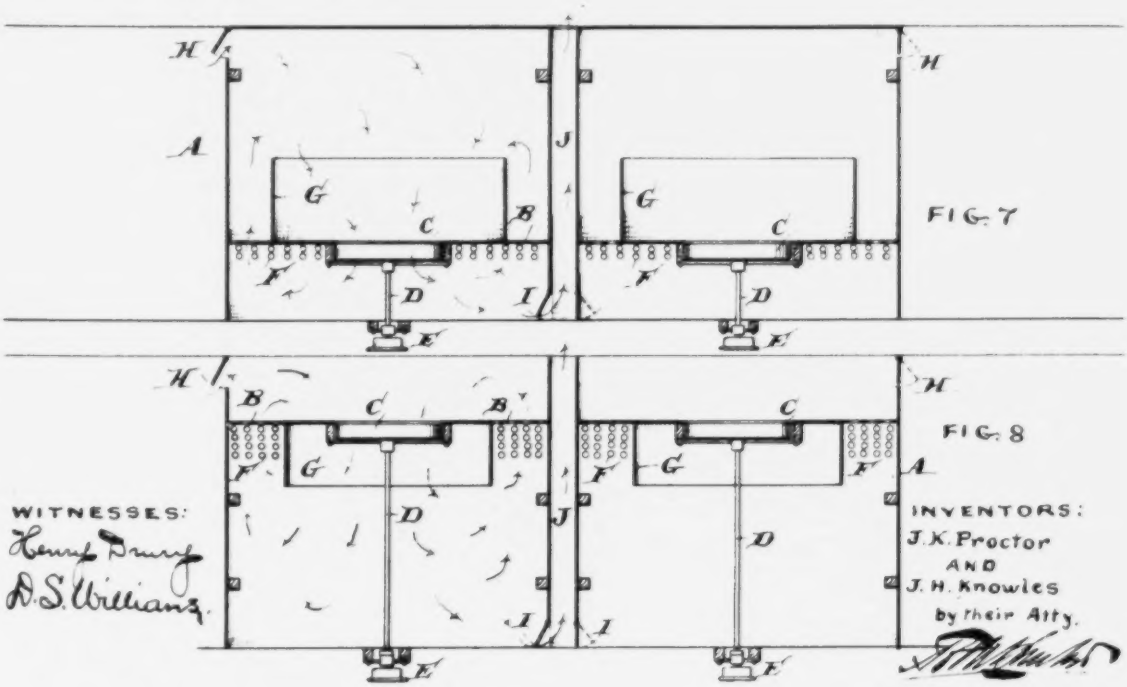

FIG. 7

FIG. 8

WITNESSES:
Henry Drury
D. S. Williams.

INVENTORS:
J. K. Proctor
AND
J. H. Knowles
by their Atty.

(No Model.) 2 Sheets—Sheet 1.

768

J. K. PROCTOR & J. H. KNOWLES.

DRYING MACHINE.

No. 426,321. Patented Apr. 22, 1890.

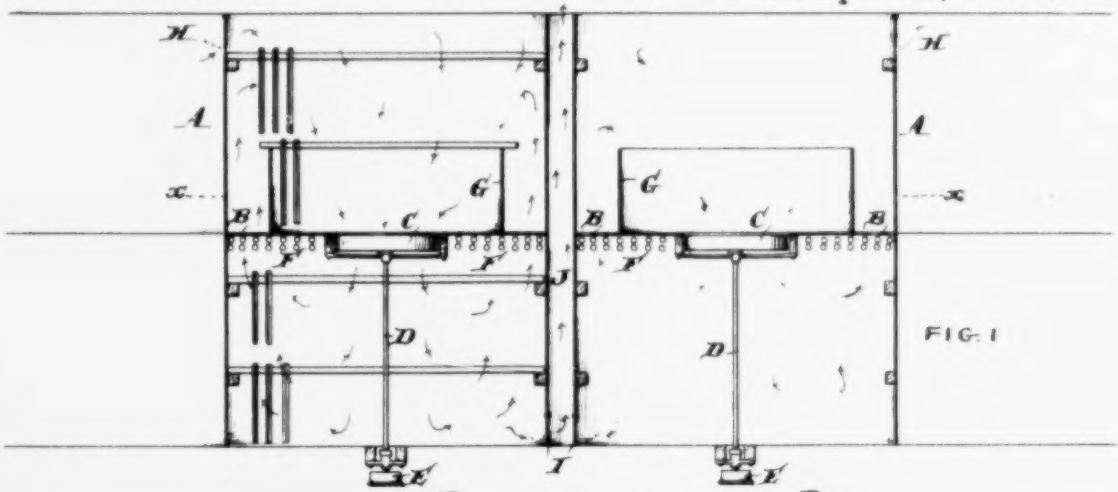

FIG. 1

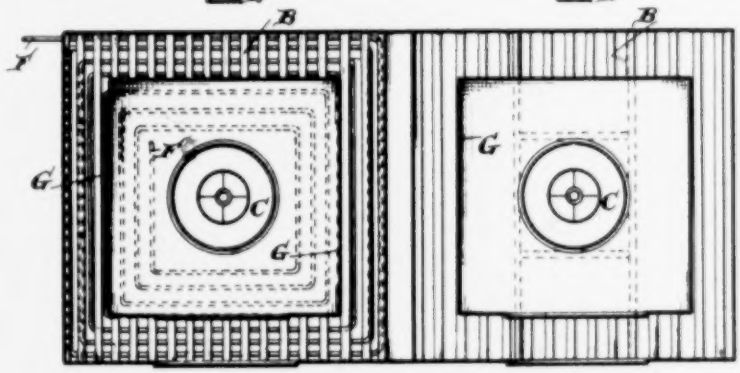

FIG. 2

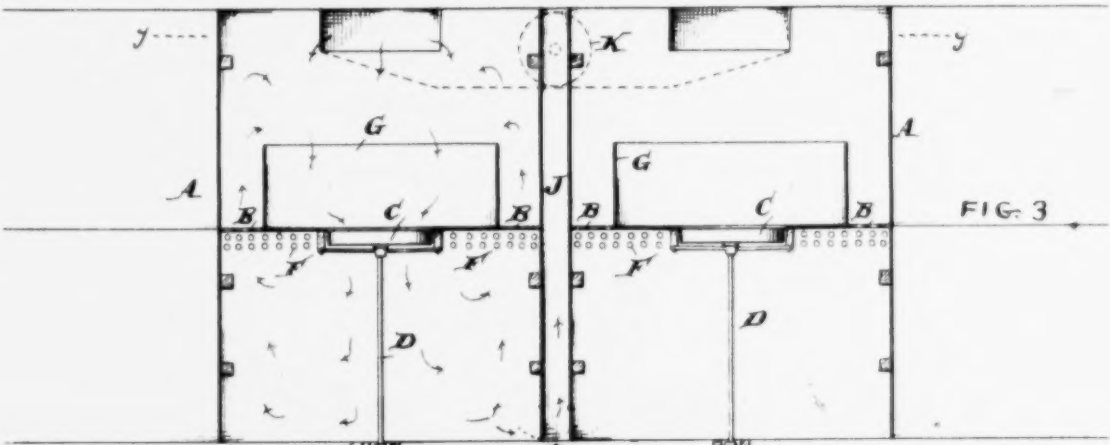

FIG. 3

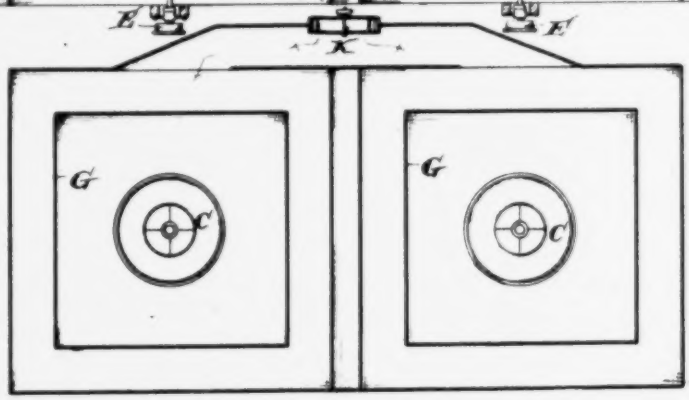

FIG. 4

WITNESSES:
Henry Drury
D. S. Williams

INVENTORS:
J. K. Proctor
AND
J. H. Knowles
by their Atty.

UNITED STATES PATENT

JOSIAH K. PROCTOR AND JOHN HENRY KNOWLES, OF PHIL
SYLVANIA, ASSIGNORS TO THE PHILADELPHIA TEX
COMPANY, OF SAME PLACE.

DRYING-MACHINE.

SPECIFICATION forming part of Letters Patent No. 426,321, dated

Application filed January 19, 1889. Serial No. 296,827. (No model.)

To all whom it may concern.

Be it known that we, JOSIAH K. PROCTOR and JOHN HENRY KNOWLES, of the city and county of Philadelphia, and State of Pennsylvania, have invented an Improvement in Drying-Machines, of which the following is a specification.

Our invention relates to drying-machines; and it consists of certain improvements, all of which are fully set forth in the following specification and shown in the accompanying drawings, which form part thereof.

More particularly our invention relates to that class of drying apparatus in which the air is forced or drawn through or among the material to be dried by means of air forcing or exhausting mechanism.

It is the object of our invention to cause an even distribution of the air as it is moved through the drying-room among the material and to heat it in the drying-room itself, so that there shall be no waste of heat from direct radiation. The material to be dried may be arranged loosely in layers or on racks or screens, or hung on hooks, poles, or other hanging devices; but whatever be the arrangement of the material, it must be such as to allow the free passage of the air through it, and should be so distributed through the room as to provide numerous air-spaces.

In the drawings, Figure 1 is a longitudinal vertical section of a pair of our improved drying-rooms. Fig. 2 is a horizontal sectional view through the line $x\ x$ of Fig. 1. Figs. 3 and 5 are longitudinal vertical sections of drying-rooms, showing modifications of our invention. Figs. 4 and 6 are horizontal sectional views of the same through the lines $y\ y$ of Fig. 3 and $z\ z$ of Fig. 5, respectively, and Figs. 7 and 8 are longitudinal sectional views of other modified forms of our improved drying-rooms.

In all the figures the same letters of reference refer to similar parts, and the arrows show the direction of the air-currents.

Although the drawings show two drying-rooms side by side, we will first proceed with our description as if there were but one room, since each room is like the other in every detail, and afterward speal
the two rooms have to

A is the drying-room,
struct square in cross-se
height than width. I
suitable door, through
tered by the workman.

B is a central floor, w
into upper and lower
room in practice pre
floors of a building, eac
room being of sufficient
to enter and work com

C is a fan for circul
room, having a shaft D,
for supporting and driv

F are steam-heating c
the central floor B in t
lower compartment o
These coils preferably
square of the room, as s
portion of Fig. 2, and a
able supply and outlet

Extending upward fr
of the upper compartme
is an inclosure or funn
air passes to the fan C.
upward about one-thir
the floor B to the top of
is preferably formed r
walls, though it may be f
shape in cross-section.
the floor B is continuous
vided with a suitable o
fan. Outside of the fu
and the four walls of
floor B is provided with
communicating betwee
compartments. In the
ings are shown as forme
floor of slats, leaving c
tween them; but the sl
is obviously immateria
nish sufficient aggregat
culation of the air from
the other. The slatted
support for the operator
in the upper compartmo

2 Sheets—Sheet 1.

K. PROCTOR & J. H. KNOWLES.

DRYING MACHINE.

Patented Apr. 22, 1890.

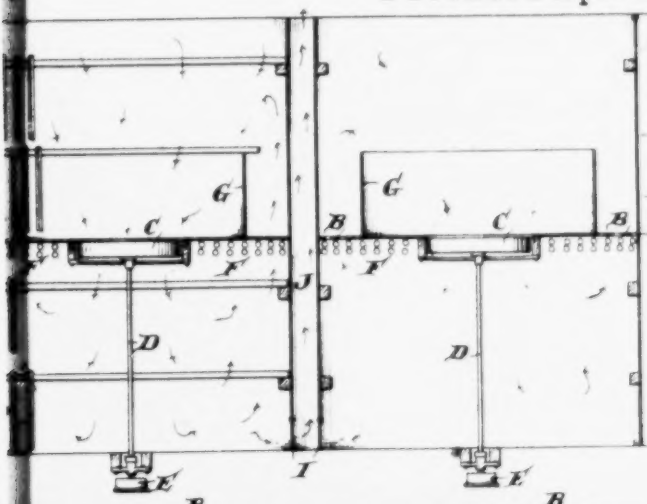

FIG. 1

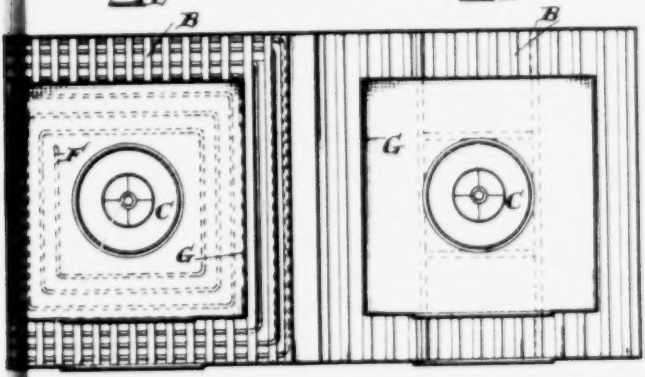

FIG. 2

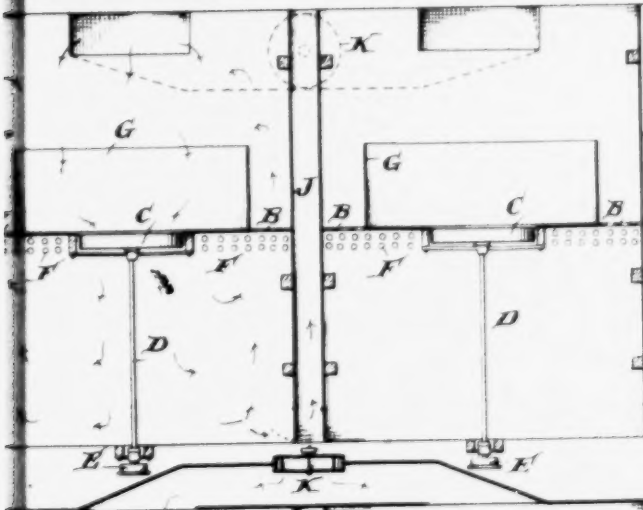

FIG. 3

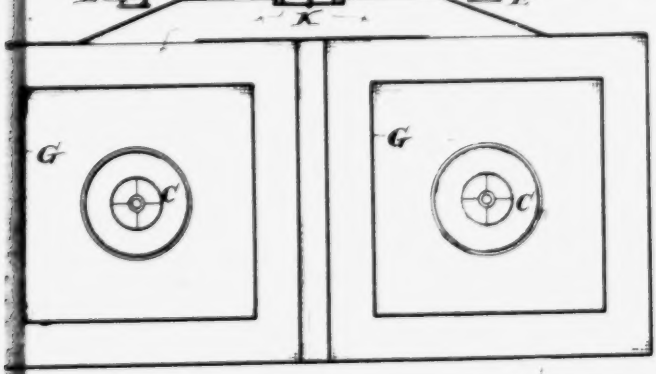

FIG. 4

INVENTORS:
J. K. Proctor
AND
J. H. Knowles
by their Atty.

UNITED STATES PATENT OFFICE.

JOSIAH K. PROCTOR AND JOHN HENRY KNOWLES, OF PHILADELPHIA, PENNSYLVANIA, ASSIGNORS TO THE PHILADELPHIA TEXTILE MACHINERY COMPANY, OF SAME PLACE.

DRYING-MACHINE.

SPECIFICATION forming part of Letters Patent No. 426,321, dated April 22, 1890.

Application filed January 19, 1889. Serial No. 296,827. (No model.)

To all whom it may concern.

Be it known that we, JOSIAH K. PROCTOR and JOHN HENRY KNOWLES, of the city and county of Philadelphia, and State of Pennsylvania, have invented an Improvement in Drying-Machines, of which the following is a specification.

Our invention relates to drying-machines; and it consists of certain improvements, all of which are fully set forth in the following specification and shown in the accompanying drawings, which form part thereof.

More particularly our invention relates to that class of drying apparatus in which the air is forced or drawn through or among the material to be dried by means of air forcing or exhausting mechanism.

It is the object of our invention to cause an even distribution of the air as it is moved through the drying-room among the material and to heat it in the drying-room itself, so that there shall be no waste of heat from direct radiation. The material to be dried may be arranged loosely in layers or on racks or screens, or hung on hooks, poles, or other hanging devices; but whatever be the arrangement of the material, it must be such as to allow the free passage of the air through it, and should be so distributed through the room as to provide numerous air-spaces.

In the drawings, Figure 1 is a longitudinal vertical section of a pair of our improved drying-rooms. Fig. 2 is a horizontal sectional view through the line *x x* of Fig. 1. Figs. 3 and 5 are longitudinal vertical sections of drying-rooms, showing modifications of our invention. Figs. 4 and 6 are horizontal sectional views of the same through the lines *y y* of Fig. 3 and *z z* of Fig. 5, respectively, and Figs. 7 and 8 are longitudinal sectional views of other modified forms of our improved drying-rooms.

In all the figures the same letters of reference refer to similar parts, and the arrows show the direction of the air-currents.

Although the drawings show two drying-rooms side by side, we will first proceed with our description as if there were but one room, since each room is like the other in every detail, and afterward speak of the relation which the two rooms have to one another.

A is the drying-room, which we prefer to construct square in cross-section, but of a greater height than width. It is provided with a suitable door, through which it may be entered by the workman.

B is a central floor, which divides the room into upper and lower compartments. The room in practice preferably occupies two floors of a building, each compartment of the room being of sufficient height for a workman to enter and work comfortably therein.

C is a fan for circulating the air in the room, having a shaft D, bearing the pulley E, for supporting and driving the fan.

F are steam-heating coils placed just below the central floor B in the upper part of the lower compartment of the drying-room. These coils preferably run around the entire square of the room, as shown in the left-hand portion of Fig. 2, and are furnished with suitable supply and outlet pipes.

Extending upward from the floor B, inside of the upper compartment of the drying-room, is an inclosure or funnel G, down which the air passes to the fan C. This funnel extends upward about one-third of the height from the floor B to the top of the drying-room, and is preferably formed rectangular with four walls, though it may be formed in any suitable shape in cross-section. Within this funnel the floor B is continuous, except that it is provided with a suitable opening leading to the fan. Outside of the funnel and between it and the four walls of the drying-room the floor B is provided with numerous openings communicating between the lower and upper compartments. In the drawings these openings are shown as formed by constructing the floor of slats, leaving continuous spaces between them; but the shape of the openings is obviously immaterial, provided they furnish sufficient aggregate area for the free circulation of the air from one compartment to the other. The slatted floor also serves as a support for the operator in handling the goods in the upper compartment of the drying-room.

H and I are respectively an inlet and outlet air-passage, which are provided with suitable doors or gates.

The operation of the apparatus in drying yarn or other material is as follows: The doors H and I are closed, and the air driven by the fan C is impelled downward through and among the material until it reaches the bottom, where, finding no outlet, it circulates upward around the four sides and corners of the room and passes through the openings in the floor B to the upper compartment, taking with it heat from the steam-coils F, through a portion of which it is compelled to pass. After passing through the floor B the air ascends upward to the top of the drying-room, whence it is drawn downward through the funnel G by the fan C. The general direction of the air-currents in the various parts of the drying-room may be clearly understood from the arrows in Fig. 1. The funnel G serves the purpose of giving direction to the circulation by compelling the air which otherwise would pass in currents just over the floor B directly to the fan to pass outside of the funnel to the top of the room. The air as it thus circulates passes through and among the material to be dried in every part of the room, becoming rapidly heated and absorbing the moisture from the damp goods. The doors H and I may now be opened to admit a supply of fresh dry air through the former and to permit the hot damp air to escape from the latter, and by a proper adjustment of these doors the temperature and humidity of the air in the drying-room may be regulated and increased or diminished, as desired. When the drying of the material is completed, the doors H and I are fully opened and the steam is shut off from the coil. The fan C soon drives out all the extra heat from the room, rendering the temperature therein comfortable to work in. If desired, during the whole process of taking the goods out and recharging the drier the fan C may be kept running, preferably at a slower speed than usual, so as to produce a grateful temperature to work in. In summer-time such a circulation of air during the recharging of the room is extremely pleasant and desirable. In some cases the doors H and I may be dispensed with, leaving an open inlet and outlet, through which a continued and uniform passage of air may be maintained.

In the drawings we have shown two drying-rooms adjoining one another, with a common passage or flue J, into which each of the drying-rooms empties its discharging currents. The ascending column of heated air in the flue J produces a suction at the bottom of the flue on the principle of atmospheric equilibrium, as in chimneys, and to this extent assists in removing the discharge from the drying-rooms. Of course the flue J could be built by the side of a single drying-room instead of being placed between two drying-rooms; but the method as shown is an economical arrangement where more than one drying-room is required to do the work. The flue J is not absolutely necessary to the successful working of the apparatus, but is a desirable adjunct to it.

Instead of depending entirely on the fan C and flue J for the discharge of the waste air from the drying-room, we sometimes force the air out by a second fan K, placed specially for that purpose. In Figs. 3 and 4 this fan is placed at the top and forces the air into the drying-rooms just under the top of the room, where it is mingled with the downward current through the funnels or flues G. When this special fan is thus placed at the top of the drier, the opening H is not used, the only opening into the top of the drying-rooms being from the special fan, and the discharge is forced out at the openings I by the combined pressures produced by the said special fan and the fan C.

In Figs. 5 and 6 the special fan K is placed at the bottom of the drying-rooms and sucks the discharge out. When thus placed, the openings I are not used, the only opening from the bottom being that leading to the special fan, and the discharge is effected by the combined efforts of the forcing-fan C and the special sucking-fan K. It will be observed that when this special fan is placed at the bottom no waste-flue J need be employed, and none is shown in Figs. 5 and 6; but whether this special fan is placed at the top or the bottom of the drier, the openings into the drying-rooms from or to the fan may be controlled by suitable doors or gates, and one fan will suffice for two adjoining rooms by having communicating passages from the fan to the rooms, as shown in the drawings.

The steam-coils F, while preferably placed as shown in the drawings, may be placed in any other convenient position inside of the drier—as, for instance, over the floor B, or in the bottom of the room just over the lower floor. The funnel or flue C may be continued downward and below the floor B to any desired depth for the purpose of guiding the downward currents. Instead of a fan such as shown in the drawings for moving the air, any other suitable air-moving devices may be employed.

Where on account of the lack of vertical height in the building in which our drier may have to be located, or where it may be necessary to dry only a small quantity of goods at one time, we construct these driers with but a single compartment for the goods, the second compartment in this case becoming a mere air chamber or passage. In Figs. 7 and 8 the air-chamber thus formed is shown placed at the bottom and top of the drier, respectively.

While we prefer the construction here shown, it is apparent that the mere details may be varied in many ways without depart-

ing from the principle of our invention, and are therefore not to be considered limitations of it.

We are aware of the Patent No. 263,013, granted to Blodgett for oven for baking, cooking, or drying by employing the difference in specific gravity in air of different temperatures to induce circulation, and do not claim anything therein set out or claimed.

Having now described our invention, what we claim as new, and desire to secure by Letters Patent, is—

1. A drying-room provided with a partition dividing it into upper and lower compartments, in combination with the funnel or flue G, supported upon said partition, said partition having a series of perforations in its surface outside of said funnel between the funnel and walls of the compartments, and being closed within the funnel except at its center, which is provided with an opening, and the fan C, located at said opening to cause the air in circulating through the room to pass through the funnel or flue, the said funnel or flue inclosing relatively a much larger space than that occupied by the fan and adapted to contain goods to be treated, and the said partition acting as a floor for the operator both inside and outside of the funnel.

2. A drying-room
dividing it into up
ments, in combinati
G, supported upon
tion having a series
face outside of said
nel and walls of the
closed within the fu
which is provided
fan C, located at sai
in circulating thr
through the funnel
flue inclosing relati
than that occupied
contain goods to be
tition acting as a fl
inside and outside
pipes within one of
to the partition, am
lating is caused to

In testimony of
unto set our hands.

JOSIA
JOHN

Witnesses:
SAMUEL W.
WALTER A.

ly an inlet and out-
e provided with suit-

apparatus in drying
is as follows: The
, and the air driven
downward through
until it reaches the
o outlet, it circulates
sides and corners of
ough the openings in
compartment, taking
eam-coils F, through
compelled to pass.
e floor B the air as-
of the drying-room,
wnward through the
The general direc-
in the various parts
e clearly understood
. 1. The funnel G
ving direction to the
g the air which oth-
rrents just over the
n to pass outside of
he room. The air as
through and among
in every part of the
heated and absorb-
e damp goods. The
e opened to admit a
through the former
mp air to escape from
oper adjustment of
ature and humidity
-room may be regu-
minished, as desired.
e material is com-
are fully opened and
n the coil. The fan
extra heat from the
perature therein com-
desired, during the
the goods out and re-
C may be kept run-
ver speed than usual,
eful temperature to
e such a circulation
ging of the room is
desirable. In some
may be dispensed
tand outlet, through
uniform passage of

e shown two drying-
ther, with a common
hich each of the dry-
ischarging currents.
f heated air in the
at the bottom of the
tmospheric equilib-
nd to this extent as-
charge from the dry-
he flue J could be
ngle drying-room in-
etween two drying-
rooms; but the method as shown is an economical arrangement where more than one drying-room is required to do the work. The flue J is not absolutely necessary to the successful working of the apparatus, but is a desirable adjunct to it.

Instead of depending entirely on the fan C and flue J for the discharge of the waste air from the drying-room, we sometimes force the air out by a second fan K, placed specially for that purpose. In Figs. 3 and 4 this fan is placed at the top and forces the air into the drying-rooms just under the top of the room, where it is mingled with the downward current through the funnels or flues G. When this special fan is thus placed at the top of the drier, the opening H is not used, the only opening into the top of the drying-rooms being from the special fan, and the discharge is forced out at the openings I by the combined pressures produced by the said special fan and the fan C.

In Figs. 5 and 6 the special fan K is placed at the bottom of the drying-rooms and sucks the discharge out. When thus placed, the openings I are not used, the only opening from the bottom being that leading to the special fan, and the discharge is effected by the combined efforts of the forcing-fan C and the special sucking-fan K. It will be observed that when this special fan is placed at the bottom no waste-flue J need be employed, and none is shown in Figs. 5 and 6; but whether this special fan is placed at the top or the bottom of the drier, the openings into the drying-rooms from or to the fan may be controlled by suitable doors or gates, and one fan will suffice for two adjoining rooms by having communicating passages from the fan to the rooms, as shown in the drawings.

The steam-coils F, while preferably placed as shown in the drawings, may be placed in any other convenient position inside of the drier—as, for instance, over the floor B, or in the bottom of the room just over the lower floor. The funnel or flue C may be continued downward and below the floor B to any desired depth for the purpose of guiding the downward currents. Instead of a fan such as shown in the drawings for moving the air, any other suitable air-moving devices may be employed.

Where on account of the lack of vertical height in the building in which our drier may have to be located, or where it may be necessary to dry only a small quantity of goods at one time, we construct these driers with but a single compartment for the goods, the second compartment in this case becoming a mere air chamber or passage. In Figs. 7 and 8 the air-chamber thus formed is shown placed at the bottom and top of the drier, respectively.

While we prefer the construction here shown, it is apparent that the mere details may be varied in many ways without depart-

ing from the principle of our invention, and are therefore not to be considered limitations of it.

We are aware of the Patent No. 263,013, granted to Blodgett for oven for baking, cooking, or drying by employing the difference in specific gravity in air of different temperatures to induce circulation, and do not claim anything therein set out or claimed.

Having now described our invention, what we claim as new, and desire to secure by Letters Patent, is—

1. A drying-room provided with a partition dividing it into upper and lower compartments, in combination with the funnel or flue G, supported upon said partition, said partition having a series of perforations in its surface outside of said funnel between the funnel and walls of the compartments, and being closed within the funnel except at its center, which is provided with an opening, and the fan C, located at said opening to cause the air in circulating through the room to pass through the funnel or flue, the said funnel or flue inclosing relatively a much larger space than that occupied by the fan and adapted to contain goods to be treated, and the said partition acting as a floor for the operator both inside and outside of the funnel.

2. A drying-room provided with a partition dividing it into upper and lower compartments, in combination with the funnel or flue G, supported upon said partition, said partition having a series of perforations in its surface outside of said funnel between the funnel and walls of the compartments, and being closed within the funnel except at its center, which is provided with an opening, and the fan C, located at said opening to cause the air in circulating through the room to pass through the funnel or flue, the said funnel or flue inclosing relatively a much larger space than that occupied by the fan and adapted to contain goods to be treated, and the said partition acting as a floor for the operator both inside and outside of the funnel, and steam-pipes within one of said compartments close to the partition, among which the air in circulating is caused to pass.

In testimony of which invention we hereunto set our hands.

JOSIAH K. PROCTOR.
JOHN HENRY KNOWLES.

Witnesses:
SAMUEL W. THACKRAH,
WALTER A. KREIDER.

774

No. 843,909. PATENTED FEB. 12, 1907.

F. M. PETERS & H. H. HUNGERFORD.

ATMOSPHERE REGULATING SYSTEM.

APPLICATION FILED JUNE 8, 1903.

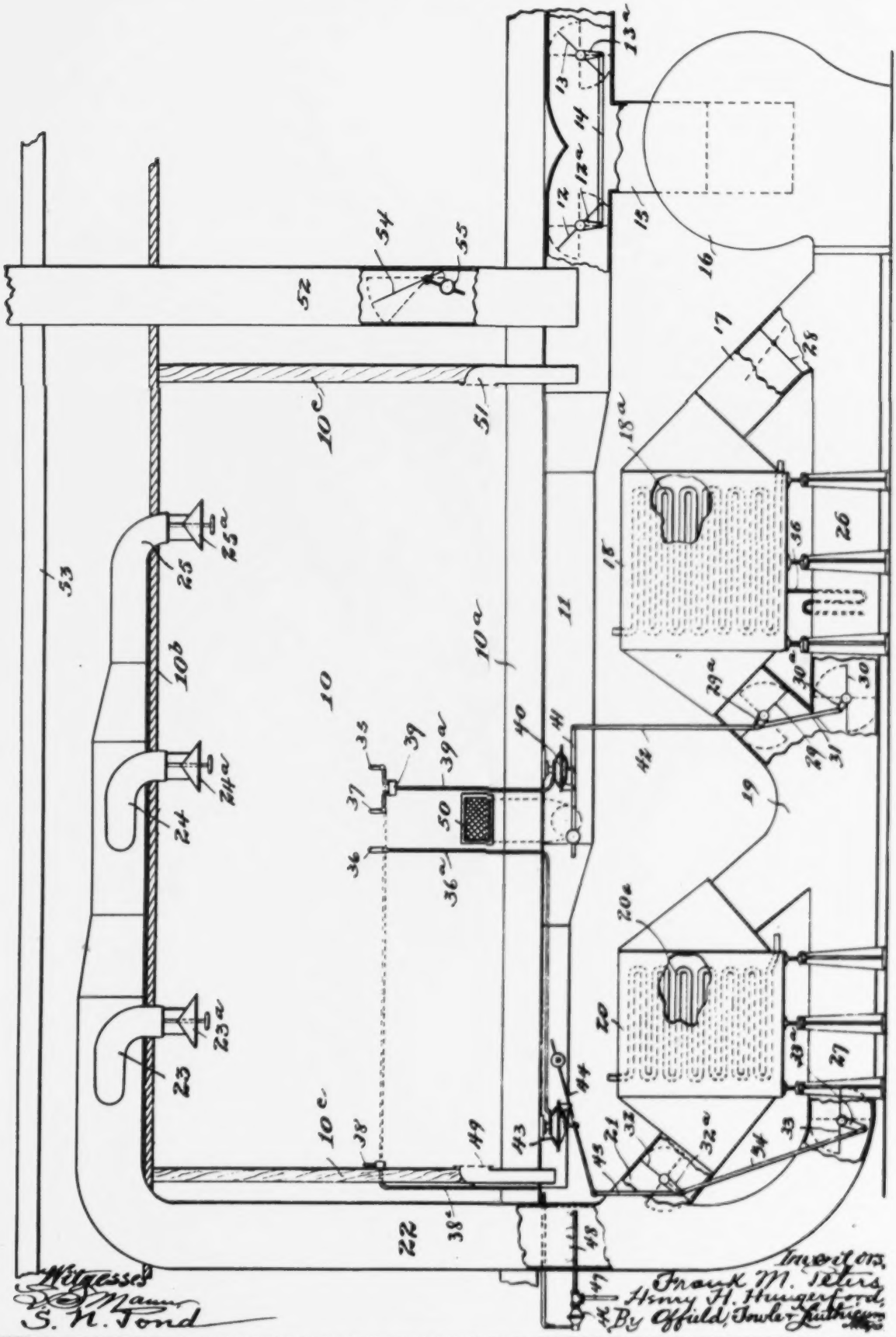

Witnesses:
S. Mann
S. N. Pond

Inventors:
Frank M. Peters,
Henry H. Hungerford,
By Offield, Towler & Lothrop
Attys.

UNITED STATES PATENT

FRANK M. PETERS AND HENRY H. HUNGERFORD, C
SAID HUNGERFORD ASSIGNOR TO SAI

ATMOSPHERE-REGULATING SYST

No. 843,909. Specification of Letters Patent.

Application filed June 8, 1903. Serial No. 160,620.

To all whom it may concern:

Be it known that we, FRANK M. PETERS and HENRY H. HUNGERFORD, citizens of the United States, residing at Chicago, in the county of Cook and State of Illinois, have invented certain new and useful Improvements in Atmosphere-Regulating Systems, of which the following is a specification.

Our invention relates to improvements in systems and devices for regulating atmospheric conditions, and more particularly to a system which includes as features thereof means for controlling and regulating the temperature, the humidity, and the ventilation, any or all, of the room or chamber subjected to the influence of the apparatus.

Experience has shown that in bakeries, breweries, and similar establishments certain processes of manufacture or certain steps therein require a more or less protracted maintenance of atmospheric conditions of substantial uniformity as regards temperature, humidity, and ventilation, or any or all of these conditions, while in school-houses, hospitals, theaters, and the like it is also desirable and advantageous, for a variety of reasons, to maintain substantial uniformity of such atmospheric conditions.

In carrying out our invention we employ means for maintaining a circulation of air through a room or chamber, which means are regulable to maintain a constant flow of fresh air, a flow of fresh air in association with air that has already passed through the apartment, or a continuous circulation and reuse of the same or substantially the same body of air, and in connection therewith we employ thermostatically and humidostatically controlled agencies for maintaining substantially constant a desired character or condition of the air circulated with reference to its temperature and humidity.

Our invention is graphically shown in the accompanying drawing, which represents in diagrammatic form the various agencies employed in carrying out our invention and their relation to each other.

Referring to the drawing, 10 may represent a room or apartment designed to be controlled as to its atmospheric condition.

10^a may represent the floor, 10^b the ceiling, and 10^c the side and end walls, of the apartment 10. Directly beneath the floor 10^a is an air return and vent duct 11, one end of which (the right- leads to the exter the duct being co pers 12 and 13, th nected to operate 13^a, respectively, The air-duct 11 b 12 and 13 is tapp a fan or blower, (charge side of s thereto a pipe-sec or cylinder 18, co coils, (indicated curved pipe exte box or cylinder heating-coils, (in short section 21 conduit pipe 22, l the apartment an said pipe termina branches 23, 24, the ceiling, said being provided w 25^a, respectively, volume of air disc and likewise to th fuse the same.

Between the pi by-pass 26 aroun tween the section sections 21 and 2 around the air-he tion 17 is interp damper 28, which when the current through the cool ends of the sectio provided with da spectively, the sp nected to operate 30^a and a connecti when either is wid Similarly, in the p interposed damper tively, the spindle to operate in uniso a connecting-rod 3 set that when one closed.

In the apartme a pair of thermost which are indicate of humidostats, th are indicated at 37

PATENTED FEB. 12, 1907.

M. PETERS & H. H. HUNGERFORD.

MOSPHERE REGULATING SYSTEM.

APPLICATION FILED JUNE 8, 1903.

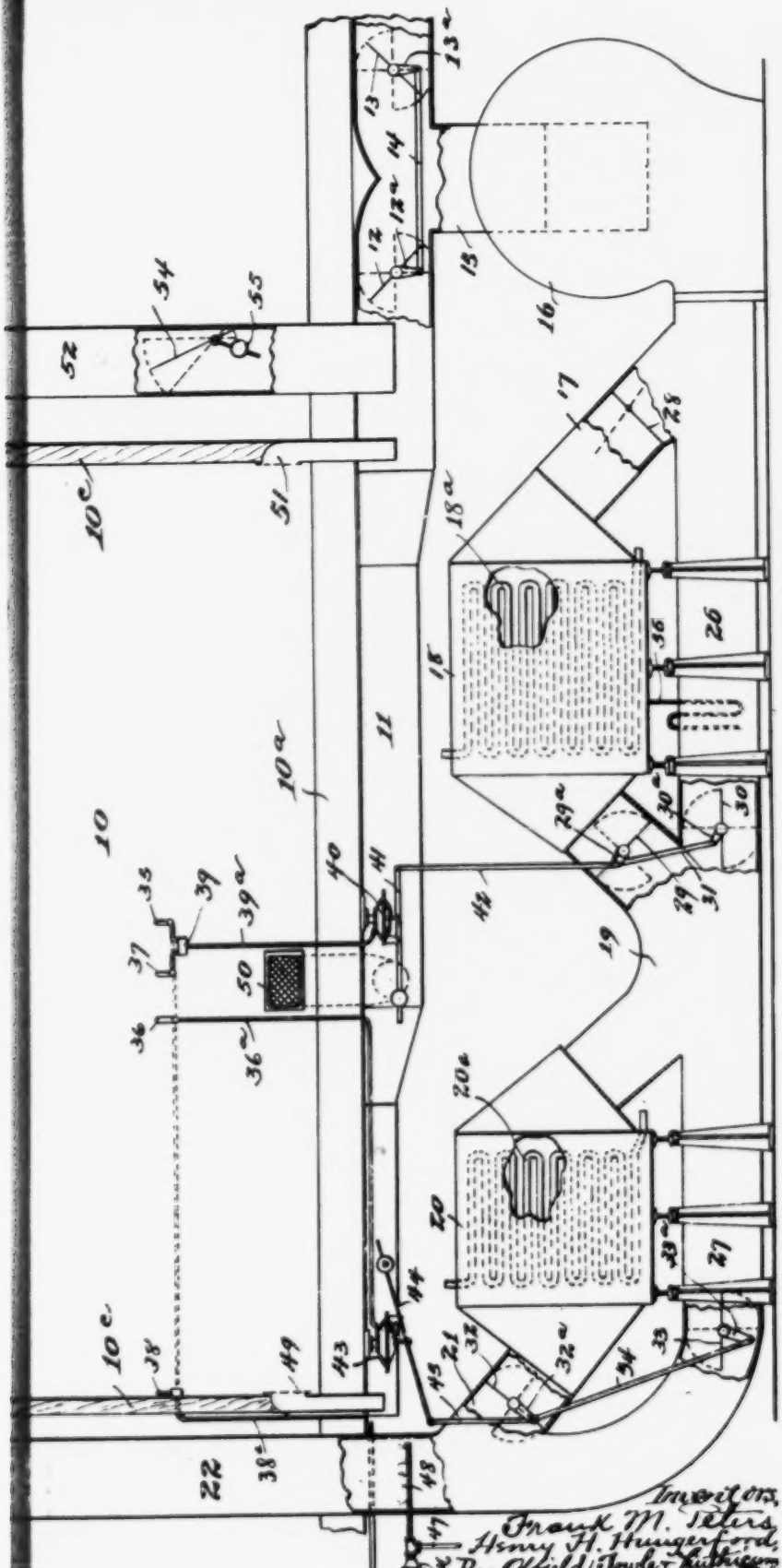

UNITED STATES PATENT OFFICE.

FRANK M. PETERS AND HENRY H. HUNGERFORD, OF CHICAGO, ILLINOIS; SAID HUNGERFORD ASSIGNOR TO SAID PETERS.

ATMOSPHERE-REGULATING SYSTEM.

No. 843,909. Specification of Letters Patent. Patented Feb. 12, 1907.

Application filed June 8, 1903. Serial No. 160,620.

To all whom it may concern:

Be it known that we, FRANK M. PETERS and HENRY H. HUNGERFORD, citizens of the United States, residing at Chicago, in the county of Cook and State of Illinois, have invented certain new and useful Improvements in Atmosphere-Regulating Systems, of which the following is a specification.

Our invention relates to improvements in systems and devices for regulating atmospheric conditions, and more particularly to a system which includes as features thereof means for controlling and regulating the temperature, the humidity, and the ventilation, any or all, of the room or chamber subjected to the influence of the apparatus.

Experience has shown that in bakeries, breweries, and similar establishments certain processes of manufacture or certain steps therein require a more or less protracted maintenance of atmospheric conditions of substantial uniformity as regards temperature, humidity, and ventilation, or any or all of these conditions, while in school-houses, hospitals, theaters, and the like it is also desirable and advantageous, for a variety of reasons, to maintain substantial uniformity of such atmospheric conditions.

In carrying out our invention we employ means for maintaining a circulation of air through a room or chamber, which means are regulable to maintain a constant flow of fresh air, a flow of fresh air in association with air that has already passed through the apartment, or a continuous circulation and reuse of the same or substantially the same body of air, and in connection therewith we employ thermostatically and humidostatically controlled agencies for maintaining substantially constant a desired character or condition of the air circulated with reference to its temperature and humidity.

Our invention is graphically shown in the accompanying drawing, which represents in diagrammatic form the various agencies employed in carrying out our invention and their relation to each other.

Referring to the drawing, 10 may represent a room or apartment designed to be controlled as to its atmospheric condition.

10^a may represent the floor, 10^b the ceiling, and 10^c the side and end walls, of the apartment 10. Directly beneath the floor 10^a is an air return and vent duct 11, one end of which (the right-hand end as herein shown) leads to the external atmosphere, such end of the duct being controlled by a pair of dampers 12 and 13, the spindles of which are connected to operate in unison by arms 12^a and 13^a, respectively, and a connecting-rod 14. The air-duct 11 between the damper-valves 12 and 13 is tapped by the intake-duct 15 of a fan or blower, (indicated at 16.) The discharge side of said blower has connected thereto a pipe-section 17, leading into a box or cylinder 18, containing a series of cooling-coils, (indicated at 18^a,) whence a second curved pipe extension 19 leads into a second box or cylinder 20, containing a series of heating-coils, (indicated at 20^a,) whence a short section 21 communicates with an air-conduit pipe 22, leading up behind one end of the apartment and above the ceiling thereof, said pipe terminating in a group of discharge branches 23, 24, and 25, depending through the ceiling, said discharge-pipes preferably being provided with deflectors 23^a, 24^a, and 25^a, respectively, designed to regulate the volume of air discharged into the apartment and likewise to thoroughly disperse and diffuse the same.

Between the pipe-sections 17 and 19 is a by-pass 26 around the air-cooler 18, and between the sections 19 and the junction of the sections 21 and 22 is a second by-pass 27 around the air-heater 20. In the pipe-section 17 is interposed a balanced valve or damper 28, which is normally closed except when the current of air is to be directed through the cooler 18, while the adjacent ends of the section 19 and by-pass 26 are provided with damper-valves 29 and 30, respectively, the spindles of which are connected to operate in unison by arms 29^a and 30^a and a connecting-link 31 and so set that when either is wide open the other is closed. Similarly, in the pipe 21 and by-pass 27 are interposed damper-valves 32 and 33, respectively, the spindles of which are connected to operate in unison by arms 32^a and 33^a and a connecting-rod 34, said valves also being so set that when one is fully opened the other is closed.

In the apartment 10 are suitably located a pair of thermostats, the exposed parts of which are indicated at 35 and 36, and a pair of humidostats, the exposed parts of which are indicated at 37 and 38. The thermostat

35 and humidostat 37 may operate through a cumulative controller (indicated at 39) and a pressure-pipe 39^a on a diaphragm-chamber 40, the diaphragm of which latter is connected, through a counterweighted lever 41 and link 42, with the rod 31, connecting the damper-valves 29 and 30. The thermostat 36 is similarly connected, through its pressure-pipe 36^a, diaphragm-chamber 43, a counterweighted lever 44, and link 45, with the rod 34, connecting the damper-valves 32 and 33. The humidostat 38, through its pressure-pipe 38^a and valve 46, governs the admission of a steam-jet through a pipe 47 and nozzle 48, which enters the air-conduit at any suitable point between the air-blower and the chamber, said nozzle being herein shown as penetrating the lower end of the section 22 in such a manner as to discharge the steam-vapor directly into the current of air traveling therethrough.

The outlet for the air in the apartment 10 is provided for by one or more flues 49, 50, and 51, opening through the inner surfaces of the side and end walls of the apartment and leading thence through the floor into the return and vent duct 11. A vent-pipe 52 at its lower end taps the duct 11 inwardly of the innermost damper-valve 12, said pipe extending through the ceiling of the apartment and through the superposed roof of the building, (indicated at 53.) At any suitable point in the vent-pipe 52 is placed a balanced damper-valve 54, the counterweight 55 of which is so arranged as to normally maintain the valve closed, but permit it to open more or less, accordingly as the return-passage for the air to the fan is closed or opened. The cooler box or cylinder has tapping its bottom a trapped discharge-pipe 56 for a purpose hereinafter described.

The operation of our improved system of atmosphere regulation is substantially as follows: Assuming that the damper-valves 12 and 13 are so set as to close the valve 12 and open wide the valve 13 and the fan having been set in operation, a current of fresh air from outside is drawn into and forced through the fan. Assuming that this air is at or substantially at the predetermined temperature desired within the apartment 10 to which the thermostats have been set, the latter will so operate as to maintain closed the valves 29 and 32 and maintain open the valves 30 and 33, under which condition of the apparatus the current will flow directly through the by-passes 26 and 27, the section 22, and the discharge-sections 23, 24, and 25 into the chamber 10, the air passing thence through the discharge-flues 49, 50, and 51 into the return and vent duct 11, whence the current rises and passes off through the vent-pipe 52, the force of the current being sufficient to swing the balanced valve 54 open sufficiently to permit its passage. If, however, the air drawn from outside through the fan exceeds the desired temperature limit of the chamber 10, the thermostat indicated at 35 promptly reverses the dampers 29 30, thus causing the current of air from the blower to pass through the cooler 18, the closing of the damper 30 creating sufficient pressure to open the balanced valve 28 and permit the flow of air past the same. If, on the other hand, the air from outside is cooler than is desired to be maintained in the chamber 10, the thermostat indicated at 36 acts to reverse the valves 32 and 33, thereby causing a current of air emerging from the by-pass 26 to travel through the heater 20. By means of the steam-pipe 47 and jet 48 a supply of aqueous vapor may be furnished to the current of air on its way to the apartment, and if the incoming air proves to be too dry or if its travel through the cooler 18 has extracted too much of the humidity therefrom the current of air can be moistened to the required degree by this means, which is controlled by the humidostat 38 acting, through its valve 46, to admit the supply of steam-vapor. If, on the other hand, the entering air contains an undue percentage of moisture, the humidostat 37 acts on the valves or dampers 29 and 30 to direct the air-current through the cooler 18, by which the moisture in the air is partially or wholly condensed, the deposited moisture being drained off through the pipe 56. Should this operation have the effect of too greatly cooling the air, the thermostat 36 will act at the same time upon the valves 32 and 33 to direct the dried cold current of air through the heater 20.

The thermostat 35 and humidostat 37 control independent valves that admit compressed air through the pipe 39^a to the diaphragm-chamber 40. If the conditions in the chamber 10 are too hot and too moist, both valves will open, admitting compressed air cumulatively to the diaphragm-chamber, and thereby shifting the dampers to direct the incoming air through the cooler, which is also a condenser and extracts the moisture. If the conditions in chamber 10 are too cold and too dry, neither the thermostat 35 nor the humidostat 37 will act, but these conditions will be regulated by the thermostat 36 and the humidostat 38. If the air in chamber 10 is too hot, but hygroscopically correct, the thermostat 35 alone will act, the humidostat 37 being idle. On the other hand, if the air in the chamber 10 is too moist, but of correct temperature, the humidostat 37 will act and the thermostat 35 will be idle. It will thus be seen that the thermostat 35 and humidostat 37 control only the positive conditions of temperature and humidity, while the negative conditions are controlled by the other pair 36 and 38. In other words, one of the thermostats controls the rising and the other the falling of the temperature rela-

tively to a given point or degree, while, similarly, one of the humidostats controls the increase and the other the decrease of humidity relatively to a given point or percentage of the same. There is no interference in the action of these parts, since the humidostat of either pair will promptly act to correct any change of hygroscopic conditions incidentally created by the action of the thermostat of the other pair, and vice versa.

Under some conditions it is feasible and practicable in order to a void the necessity of either heating or cooling a stream of air constantly flowing from the outside to maintain a closed circulation of the air in the apartment, and this may readily be done by reversing the valves 12 and 13, to open the former and close the latter. In this case the air-current discharged from the apartment through the return-duct 11 is obviously reconveyed to the inlet-pipe of the blower and forced thence to and through the circulation-pipes and the apartment in a continuous and closed circuit. In this case, there being no pressure on the valve 54 in the vent 52, this valve automatically closes and prevents the induction of external air through said vent. In still other circumstances it may be feasible and desirable to maintain in part a closed circuit, permitting the introduction, however, of a certain proportion of external air. For this purpose the valves 12 and 13 may be set partially open to any desired extent or degree, as shown by the full lines in the drawing, in which case the blower draws in air from both the return and vent duct 11 and from the outer atmosphere, a certain portion of the air discharged from the apartment rising through the vent 52.

From the foregoing it will be seen that our invention provides a system of ventilation which not only maintains a constant and uniform flow of air through an apartment or storage-chamber and a consequent constant change of the air therein, but may also provide for the maintenance of constant and uniform thermal or hygroscopic conditions, or both, within said apartment, irrespective of such conditions prevailing outside. Obviously for the preservation of goods and materials susceptible to deterioration and injury through thermal and hygroscopic changes a system such as our invention provides fills an important place. Similarly, in hospitals, school-houses, theaters, or other inclosed places or apartments where a great number of persons may congregate or where it is essential for the comfort and health of human beings to have perfectly-controlled atmospheric conditions such conditions may be insured by the employment of the apparatus or system herein shown.

It is evident that numerous changes and modifications, particularly in the relative detail arrangement of the air-forcing device, the air-conduits, the moistener, and other system, might be em ing from the spirit tages of the inventio limit ourselves to t tion or relative arran of the system as except to the exten claims.

We claim—

1. In an atmospher rooms, the combinat device and a conduit charge side thereof t the room, of an air-h conduit, a by-pass air-cooler also interp by-pass around said thermostatically-oper control the passage of said heater and cool by-passes respectivel perature in the room erating when the ma when the minimum attained, substantiall

2. In an atmospher rooms, the combinati device and a conduit charge side thereof to the room, of an air-co conduit, a by-pass aro heater also interposed pass around said he operated means servi sage of the air-curren and cooler and their the temperature in t statically-controlled control the passage of said cooler, substantia

3. In an atmosphere rooms, the combinati device and a conduit e charge side thereof to the room, of a moistur in said conduit, a by- denser, and means ope located in the room se current through said pass, substantially as

4. In an atmosphere rooms, the combinati device and a conduit e charge side thereof to the room, of a moistur in said conduit, a by- denser, means operate cated in the room ser current through said humidity of the air in t determined point, a posed in said conduit, a the humidostat locate

operate through a
cated at 39) and a
phragm-chamber
latter is connect-
nted lever 41 and
necting the dam-
thermostat 36 is
its pressure-pipe
43, a counter-
k 45, with the rod
valves 32 and 33.
its pressure-pipe
he admission of a
7 and nozzle 48,
it at any suitable
er and the cham-
n shown as pene-
section 22 in such
the steam-vapor
of air traveling

the apartment 10
more flues 49, 50,
e inner surfaces of
he apartment and
floor into the re-
A vent-pipe 52 at
ct 11 inwardly of
ve 12, said pipe
ing of the apart-
rposed roof of the
.) At any suit-
52 is placed a bal-
counterweight 55
o normally main-
permit it to open
s the return-pas-
closed or opened.
r has tapping its
ge-pipe 56 for a
ed.

proved system of
bstantially as fol-
damper-valves 12
the valve 12 and
d the fan having
rrent of fresh air
nd forced through
his air is at or sub-
ined temperature
nt 10 to which the
the latter will so
sed the valves 29
the valves 30 and
of the apparatus
y through the by-
n 22, and the dis-
25 into the cham-
ence through the
51 into the return
the current rises
vent-pipe 52, the
sufficient to swing
en sufficiently to
however, the air

drawn from outside through the fan exceeds the desired temperature limit of the chamber 10, the thermostat indicated at 35 promptly reverses the dampers 29 30, thus causing the current of air from the blower to pass through the cooler 18, the closing of the damper 30 creating sufficient pressure to open the balanced valve 28 and permit the flow of air past the same. If, on the other hand, the air from outside is cooler than is desired to be maintained in the chamber 10, the thermostat indicated at 36 acts to reverse the valves 32 and 33, thereby causing a current of air emerging from the by-pass 26 to travel through the heater 20. By means of the steam-pipe 47 and jet 48 a supply of aqueous vapor may be furnished to the current of air on its way to the apartment, and if the incoming air proves to be too dry or if its travel through the cooler 18 has extracted too much of the humidity therefrom the current of air can be moistened to the required degree by this means, which is controlled by the humidostat 38 acting, through its valve 46, to admit the supply of steam-vapor. If, on the other hand, the entering air contains an undue percentage of moisture, the humidostat 37 acts on the valves or dampers 29 and 30 to direct the air-current through the cooler 18, by which the moisture in the air is partially or wholly condensed, the deposited moisture being drained off through the pipe 56. Should this operation have the effect of too greatly cooling the air, the thermostat 36 will act at the same time upon the valves 32 and 33 to direct the dried cold current of air through the heater 20.

The thermostat 35 and humidostat 37 control independent valves that admit compressed air through the pipe 39^a to the diaphragm-chamber 40. If the conditions in the chamber 10 are too hot and too moist, both valves will open, admitting compressed air cumulatively to the diaphragm-chamber, and thereby shifting the dampers to direct the incoming air through the cooler, which is also a condenser and extracts the moisture. If the conditions in chamber 10 are too cold and too dry, neither the thermostat 35 nor the humidostat 37 will act, but these conditions will be regulated by the thermostat 36 and the humidostat 38. If the air in chamber 10 is too hot, but hygroscopically correct, the thermostat 35 alone will act, the humidostat 37 being idle. On the other hand, if the air in the chamber 10 is too moist, but of correct temperature, the humidostat 37 will act and the thermostat 35 will be idle. It will thus be seen that the thermostat 35 and humidostat 37 control only the positive conditions of temperature and humidity, while the negative conditions are controlled by the other pair 36 and 38. In other words, one of the thermostats controls the rising and the other the falling of the temperature rela-

tively to a given point or degree, while, similarly, one of the humidostats controls the increase and the other the decrease of humidity relatively to a given point or percentage of the same. There is no interference in the action of these parts, since the humidostat of either pair will promptly act to correct any change of hygroscopic conditions incidentally created by the action of the thermostat of the other pair, and vice versa.

Under some conditions it is feasible and practicable in order to a void the necessity of either heating or cooling a stream of air constantly flowing from the outside to maintain a closed circulation of the air in the apartment, and this may readily be done by reversing the valves 12 and 13, to open the former and close the latter. In this case the air-current discharged from the apartment through the return-duct 11 is obviously reconveyed to the inlet-pipe of the blower and forced thence to and through the circulation-pipes and the apartment in a continuous and closed circuit. In this case, there being no pressure on the valve 54 in the vent 52, this valve automatically closes and prevents the induction of external air through said vent. In still other circumstances it may be feasible and desirable to maintain in part a closed circuit, permitting the introduction, however, of a certain proportion of external air. For this purpose the valves 12 and 13 may be set partially open to any desired extent or degree, as shown by the full lines in the drawing, in which case the blower draws in air from both the return and vent duct 11 and from the outer atmosphere, a certain portion of the air discharged from the apartment rising through the vent 52.

From the foregoing it will be seen that our invention provides a system of ventilation which not only maintains a constant and uniform flow of air through an apartment or storage-chamber and a consequent constant change of the air therein, but may also provide for the maintenance of constant and uniform thermal or hygroscopic conditions, or both, within said apartment, irrespective of such conditions prevailing outside. Obviously for the preservation of goods and materials susceptible to deterioration and injury through thermal and hygroscopic changes a system such as our invention provides fills an important place. Similarly, in hospitals, school-houses, theaters, or other inclosed places or apartments where a great number of persons may congregate or where it is essential for the comfort and health of human beings to have perfectly-controlled atmospheric conditions such conditions may be insured by the employment of the apparatus or system herein shown.

It is evident that numerous changes and modifications, particularly in the relative detail arrangement of the air-forcing device, the air-conduits, the heater, the cooler, the moistener, and other appurtenances of the system, might be employed without departing from the spirit or lessening the advantages of the invention, and hence we do not limit ourselves to the particular construction or relative arrangement of the elements of the system as shown and described, except to the extent indicated in specific claims.

We claim—

1. In an atmosphere-regulating system for rooms, the combination with an air-forcing device and a conduit extending from the discharge side thereof to and through a wall of the room, of an air-heater interposed in said conduit, a by-pass around said heater, an air-cooler also interposed in said conduit, a by-pass around said cooler, and separate thermostatically-operated means serving to control the passage of the air-current through said heater and cooler and their respective by-passes respectively according to the temperature in the room, one of said means operating when the maximum and the other when the minimum desired temperature is attained, substantially as described.

2. In an atmosphere-regulating system for rooms, the combination with an air-forcing device and a conduit extending from the discharge side thereof to and through a wall of the room, of an air-cooler interposed in said conduit, a by-pass around said cooler, an air-heater also interposed in said conduit, a by-pass around said heater, thermostatically-operated means serving to control the passage of the air-current through said heater and cooler and their by-passes according to the temperature in the room, and humidostatically-controlled means also serving to control the passage of the air-current through said cooler, substantially as described.

3. In an atmosphere-regulating system for rooms, the combination with an air-forcing device and a conduit extending from the discharge side thereof to and through a wall of the room, of a moisture-condenser interposed in said conduit, a by-pass around said condenser, and means operated by a humidostat located in the room serving to direct the air-current through said condenser or said by-pass, substantially as described.

4. In an atmosphere-regulating system for rooms, the combination with an air-forcing device and a conduit extending from the discharge side thereof to and through a wall of the room, of a moisture-condenser interposed in said conduit, a by-pass around said condenser, means operated by a humidostat located in the room serving to direct the air-current through said condenser when the humidity of the air in the room exceeds a predetermined point, a vapor-injector interposed in said conduit, and means operated by the humidostat located in the room serving

778 to admit vapor through said injector when the humidity of the air in the room falls below a predetermined point, substantially as described.

5. In an atmosphere-regulating system designed to maintain substantially constant temperature and humidity conditions in a room, the combination with an air conduit or circuit in which the room is interposed, of an air-forcing device in said conduit, air heating and cooling means also interposed in said conduit, valve-controlled by-passes around the same, thermostatically-controlled means for controlling the engagement of the circulating current with said heating and cooling means, and humidostatically-controlled means for injecting steam or other vapor into the circulating air-current, substantially as described.

6. In an atmosphere-regulating system designed to maintain substantially constant temperature and humidity conditions in a room, as well as to control the ventilation thereof, the combination with an air conduit or circuit in which the room is interposed, of an air-forcing device in said conduit, air heating and cooling means also interposed in said circuit, valve-controlled by-passes around the same, thermostatically-controlled means for controlling the engagement of the circulating current with said heating and cooling means, humidostatically-controlled means for controlling the engagement of the circulating current with said cooling means, and other humidostatically-controlled means for extracting moisture from said air-current, air inlet and outlet passages also communicating with said circuit, and means whereby the circuit may be maintained open, closed, or partially opened and closed relatively to the outer air, substantially as described.

7. In an atmosphere-regulating system for rooms, the combination with an air conduit or circuit in which the room is interposed, of an air-forcing device in said circuit, the intake member of said air-forcing device having means whereby it may be connected wholly with the circuit or wholly with the external atmosphere, or partially with both, air heating and cooling means interposed in said circuit, valve-controlled by-passes around the same, separate thermostatically-controlled means for controlling the engagement of the circulating current with said heating and cooling means respectively, and a vent-pipe tapping said conduit between the room and the air-forcing device, substantially as described.

FRANK M. PETERS.
HENRY H. HUNGERFORD.

Witnesses:
FREDERICK C. GOODWIN.
SAMUEL N. POND.

914 (Defendants' Exhibit P, Letters Patent No. J. Wiebe, May 16, 1911.)

h said injector when
n the room falls below
substantially as de-

-regulating system de-
ubstantially constant
idity conditions in a
with an air conduit or
om is interposed, of an
id conduit, air heating
so interposed in said
led by-passes around
ally-controlled means
agement of the circu-
id heating and cool-
lostatically-controlled
am or other vapor into
rent, substantially as

-regulating system de-
ubstantially constant
idity conditions in a
ontrol the ventilation
on with an air conduit
room is interposed, of
said conduit, air heat-
also interposed in said
ed by-passes around
ally-controlled means
agement of the circu-
d heating and cooling
lly-controlled means for controlling the engagement of the circulating current with said cooling means, and other humidostatically-controlled means for extracting moisture from said air-current, air inlet and outlet passages also communicating with said circuit, and means whereby the circuit may be maintained open, closed, or partially opened and closed relatively to the outer air, substantially as described.

7. In an atmosphere-regulating system for rooms, the combination with an air conduit or circuit in which the room is interposed, of an air-forcing device in said circuit, the intake member of said air-forcing device having means whereby it may be connected wholly with the circuit or wholly with the external atmosphere, or partially with both, air heating and cooling means interposed in said circuit, valve-controlled by-passes around the same, separate thermostatically-controlled means for controlling the engagement of the circulating current with said heating and cooling means respectively, and a vent-pipe tapping said conduit between the room and the air-forcing device, substantially as described.

FRANK M. PETERS.
HENRY H. HUNGERFORD.

Witnesses:
FREDERICK C. GOODWIN.
SAMUEL N. POND.

914 (Defendants' Exhibit P, Letters Patent No. 992,622 to J. Wiebe, May 16, 1911.)

J. WIEBE.

EGG DRIER.

APPLICATION FILED OCT. 18, 1910.

780

992,622.

Patented May 16, 1911.

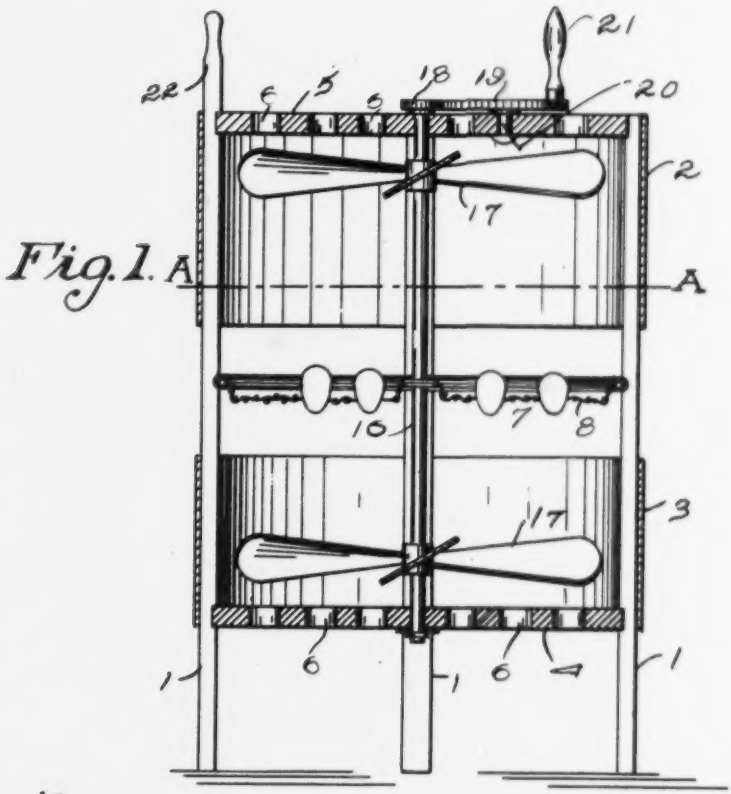

Fig. 1.

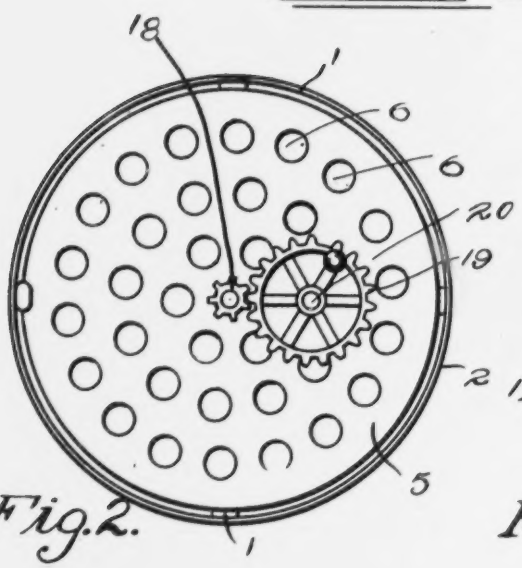

Fig. 2.

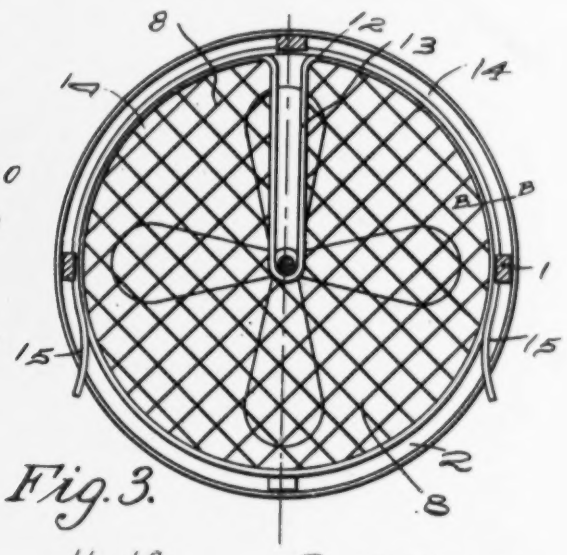

Fig. 3.

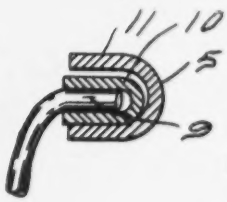

Fig. 4

WITNESSES:

H. A. Stock.

H. C. Schroeder

INVENTOR

John Wiebe

BY

E. G. Crowman,

ATTORNEY.

UNITED STATES PATENT

JOHN WIEBE, OF PETALUMA, CALIFORN

EGG-DRIER.

992,622. Specification of Letters Patent. Pa

Application filed October 18, 1910. Serial No. 587,

To all whom it may concern:

Be it known that I, JOHN WIEBE, a citizen of the United States, residing at Petaluma, in the county of Sonoma and State of California, have invented certain new and useful Improvements in Egg-Driers, of which the following is a specification.

This invention relates to apparatus for drying eggs and has for its object to provide a light portable and efficacious apparatus for rapidly removing moisture from the shell of eggs after they have been washed.

The invention comprises in its general features a casing so constructed as to permit the passage of air through the same and containing an apertured support to hold a number of eggs and means for moving air over said eggs.

Referring to the accompanying drawings: Figure 1 is a view in vertical section of an apparatus constructed in accordance with this invention. Fig. 2 is a plan view thereof. Fig. 3 is a horizontal section on the line A—A of Fig. 1. Fig. 4 is an enlarged detail view partly in cross section of a portion of the egg tray.

In carrying out the invention a suitable casing is provided, and as here shown, preferably constructed with uprights 1, and an upper and lower cylindrical casing 2 and 3, spaced apart from each other, so as to permit the passage of air between the ends of the casing. The casing is formed with an apertured top and bottom, and as here shown. preferably consists of a bottom 4 and top 5 having apertures 6 for the passage of air, said bottom 4 being mounted on the uprights 1 at a little distance from their lower ends.

Approximately midway between the top and bottom of the casing is located an apertured tray, and as here shown, preferably consisting of a shallow basket 7 formed of reticulated material 8 being of such a depth as to prevent eggs resting in the openings in the reticulated material, as shown in Fig. 1 from being shaken out of place. About the periphery at the top of the basket, the wires in the reticulated material are formed with bent ends 9 which are clamped in an annular U-shaped strip 10 movably mounted in an annular U-shaped metallic strip 11 serving as a support which is secured in any suitable manner to the uprights 1. The tray is held in place by means of a metallic strip

tion 13 and with c
nating in spring
sprung between the
of the tray, the U-s
ing over the vertica
per and lower ends
the bottom 4 of th
revolve therein.

Mounted upon t
to each end thereo
of said fan being
in the same directi
tated by any suita
shown by means o
with the toothed
pivot pin 20 in the
an operating handl
the gears 18 and 19
will be driven at hi
ber of turns of the

One of the uprig
extension 22 which
lifting the casing.

The apparatus is
eggs are washed a
which is then slid i
ing hoop 11. By o
nism a strong cur
down against the
air is augmented by
fan. This action q
the eggs and more
thereof, and by reve
fans, the blast may
bottom of the eggs.
paratus, eggs may be
than by natural eva

Having described
claim is:

1. In an apparatu
ing having a top an
with apertures, an
casing between its t
of reticulated mater
in said casing, a ro
jecting through sai
mounted on said sha
thereof, and means f
either direction.

2. An apparatus
sisting of uprights,
ings mounted on sa
apart from each oth
ing elevated above

J. WIEBE.

EGG DRIER.

APPLICATION FILED OCT. 18, 1910.

Patented May 16, 1911.

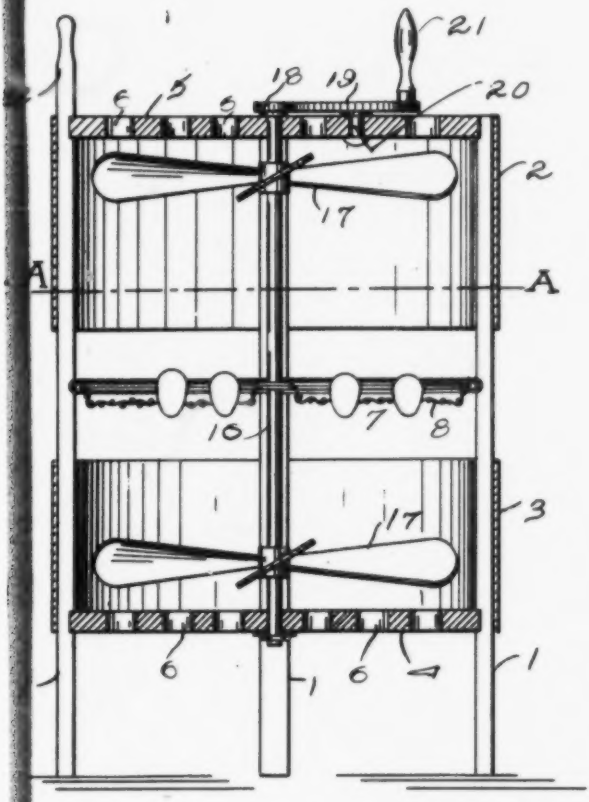

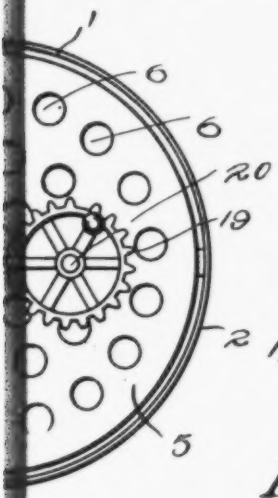

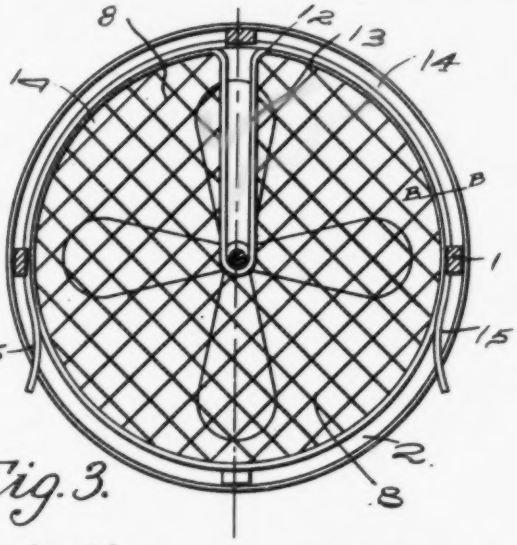

Fig. 3.

Fig. 4

INVENTOR

John Wiebe

BY

E. G. Crowman,

ATTORNEY.

UNITED STATES PATENT OFFICE.

JOHN WIEBE, OF PETALUMA, CALIFORNIA.

EGG-DRIER.

992,622. Specification of Letters Patent. Patented May 16, 1911.

Application filed October 18, 1910. Serial No. 587,663.

To all whom it may concern:

Be it known that I, JOHN WIEBE, a citizen of the United States, residing at Petaluma, in the county of Sonoma and State of California, have invented certain new and useful Improvements in Egg-Driers, of which the following is a specification.

This invention relates to apparatus for drying eggs and has for its object to provide a light portable and efficacious apparatus for rapidly removing moisture from the shell of eggs after they have been washed.

The invention comprises in its general features a casing so constructed as to permit the passage of air through the same and containing an apertured support to hold a number of eggs and means for moving air over said eggs.

Referring to the accompanying drawings: Figure 1 is a view in vertical section of an apparatus constructed in accordance with this invention. Fig. 2 is a plan view thereof. Fig. 3 is a horizontal section on the line A—A of Fig. 1. Fig. 4 is an enlarged detail view partly in cross section of a portion of the egg tray.

In carrying out the invention a suitable casing is provided, and as here shown, preferably constructed with uprights 1, and an upper and lower cylindrical casing 2 and 3, spaced apart from each other, so as to permit the passage of air between the ends of the casing. The casing is formed with an apertured top and bottom, and as here shown, preferably consists of a bottom 4 and top 5 having apertures 6 for the passage of air, said bottom 4 being mounted on the uprights 1 at a little distance from their lower ends.

Approximately midway between the top and bottom of the casing is located an apertured tray, and as here shown, preferably consisting of a shallow basket 7 formed of reticulated material 8 being of such a depth as to prevent eggs resting in the openings in the reticulated material, as shown in Fig. 1 from being shaken out of place. About the periphery at the top of the basket, the wires in the reticulated material are formed with bent ends 9 which are clamped in an annular U-shaped strip 10 movably mounted in an annular U-shaped metallic strip 11 serving as a support which is secured in any suitable manner to the uprights 1. The tray is held in place by means of a metallic strip 12 formed with an extended U-shaped portion 13 and with curved members 14 terminating in spring ends 15 adapted to be sprung between the uprights 1 and the sides of the tray, the U-shaped portion 13 extending over the vertical shaft 16, having its upper and lower ends mounted in the top 5 and the bottom 4 of the casing, and adapted to revolve therein.

Mounted upon the shaft 16 and adjacent to each end thereof is a fan 17, the blades of said fan being pitched so as to drive air in the same direction. The shaft 16 is rotated by any suitable means, and as here shown by means of the pinion 18 meshing with the toothed wheel 19 mounted on a pivot pin 20 in the top 5 and provided with an operating handle 21. The ratio between the gears 18 and 19 is such that the fan shaft will be driven at high speed by a small number of turns of the handle 21.

One of the uprights 1 is provided with an extension 22 which serves as a handle for lifting the casing.

The apparatus is used as follows: Sorted eggs are washed and placed upon the tray which is then slid into place on the supporting hoop 11. By operating the gear mechanism a strong current of air is directed down against the eggs, which current of air is augmented by the suction of the lower fan. This action quickly dries the tops of the eggs and more slowly dries the bottoms thereof, and by reversing the rotation of the fans, the blast may be directed against the bottom of the eggs. By means of this apparatus, eggs may be dried very much quicker than by natural evaporation.

Having described my invention, what I claim is:

1. In an apparatus for drying eggs, a casing having a top and bottom each provided with apertures, an annular opening in said casing between its top and bottom, a basket of reticulated material detachably mounted in said casing, a rotary vertical shaft projecting through said casing, a rotary fan mounted on said shaft adjacent to each end thereof, and means for rotating said shaft in either direction.

2. An apparatus for drying eggs, consisting of uprights, a pair of annular casings mounted on said uprights and spaced apart from each other, the lower casing being elevated above the lower end of said uprights, a perforated bottom in said lower

casing, a perforated top in said upper casing, a shallow reticulated basket detachably mounted in the uprights between said casings, a spring clip for detachably holding said basket in place, a vertical rotary shaft mounted in the bottom and top of said casing, a fan mounted on said shaft, adjacent to each end thereof, and a gear mechanism connected with said shaft for rotating it alternately in opposite directions.

In testimony whereof I affix my signature in presence of two witnesses.

JOHN WIEBE.

Witnesses:
H. C. SCHROEDER,
F. P. SCHROEDER.

918 (Defendants' Exhibit P, Letters Patent No
to J. Schmidt and Schutterle, De
1911.)

in said upper cas-
basket detachably
between said cas-
etachably holding
rtical rotary shaft
nd top of said cas-
id shaft, adjacent
a gear mechanism

connected with said shaft for rotating it alternately in opposite directions.

In testimony whereof I affix my signature in presence of two witnesses.

JOHN WIEBE.

Witnesses:
H. C. SCHROEDER,
F. P. SCHROEDER.

(Defendants' Exhibit P, Letters Patent No. 1,010,809 to J. Schmidt and Schutterle, December 5, 1911.)

784

J. SCHMIDT & H. SCHÜTTERLE.

APPARATUS FOR DRYING MACARONI AND LIKE BAKERY PRODUCTS.

APPLICATION FILED JUNE 9, 1911.

1,010,809.

Patented Dec. 5, 1911.

5 SHEETS—SHEET 5.

Fig. 5

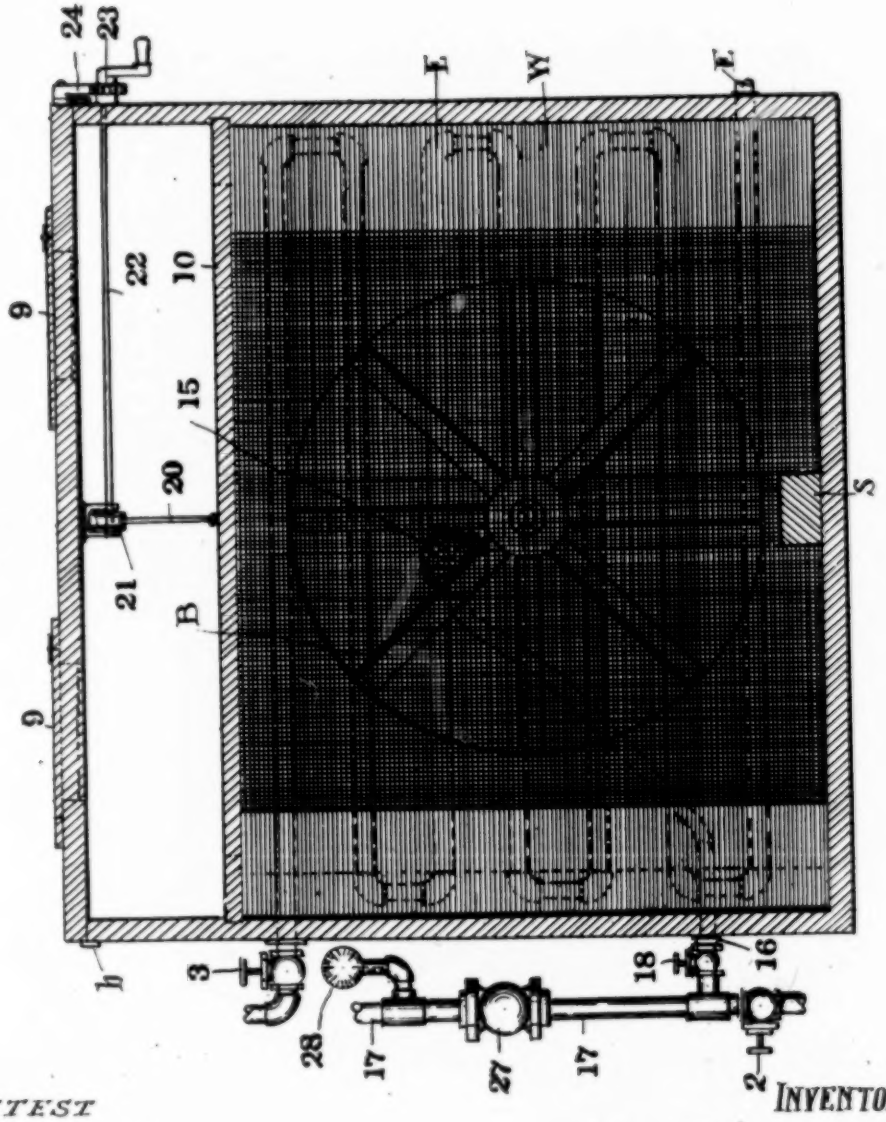

ATTEST

E. M. Fisher

F. C. Mussun

INVENTORS

JOHN SCHMIDT

HENRY SCHÜTTERLE

BY Fisher & Mussun ATTYS.

786

J. SCHMIDT & H. SCHÜTTERLE.

APPARATUS FOR DRYING MACARONI AND LIKE BAKERY PRODUCTS.

APPLICATION FILED JUNE 9, 1911.

1,010,809.

Patented Dec. 5, 1911.

5 SHEETS—SHEET 4.

Fig. 4

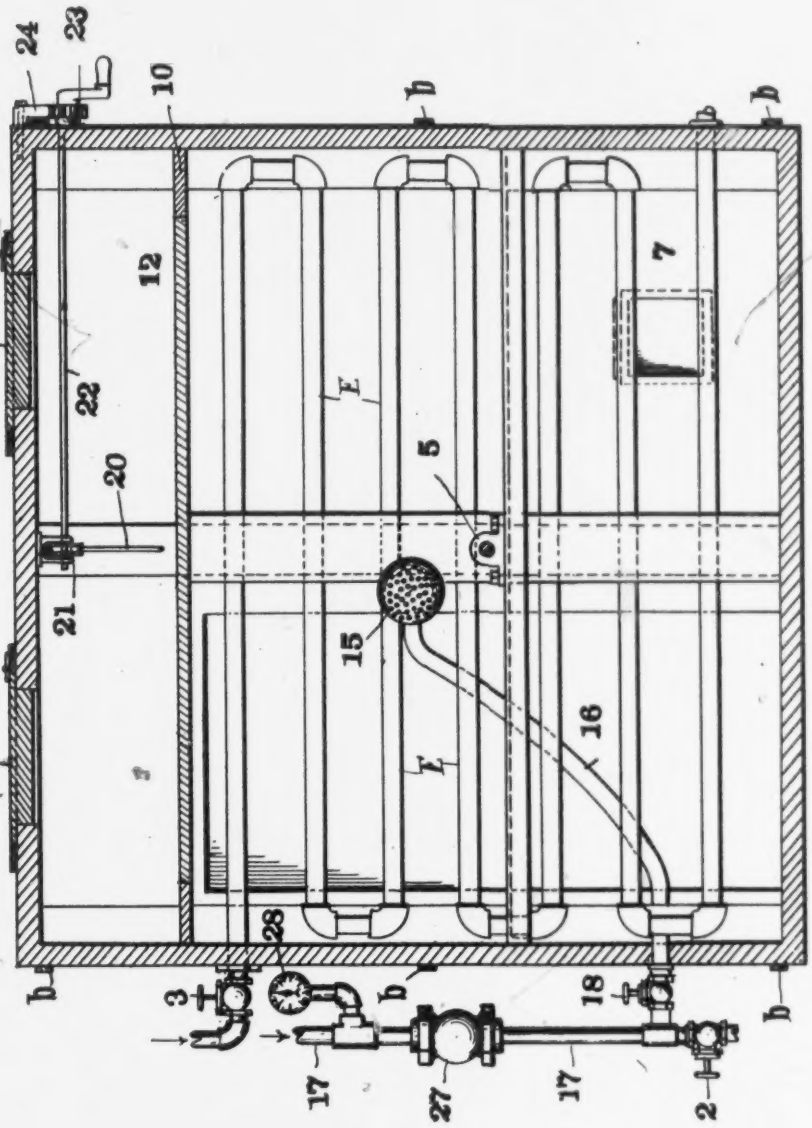

ATTEST

E. M. Fisher.
K. C. Museum.

INVENTORS
JOHN SCHMIDT
HENRY SCHÜTTERLE

BY Fisher & Museum ATTYS.

788

J. SCHMIDT & H. SCHÜTTERLE.

APPARATUS FOR DRYING MACARONI AND LIKE BAKERY PRODUCTS.

APPLICATION FILED JUNE 9, 1911.

1,010,809.

Patented Dec. 5, 1911.

5 SHEETS—SHEET 3.

Fig. 3

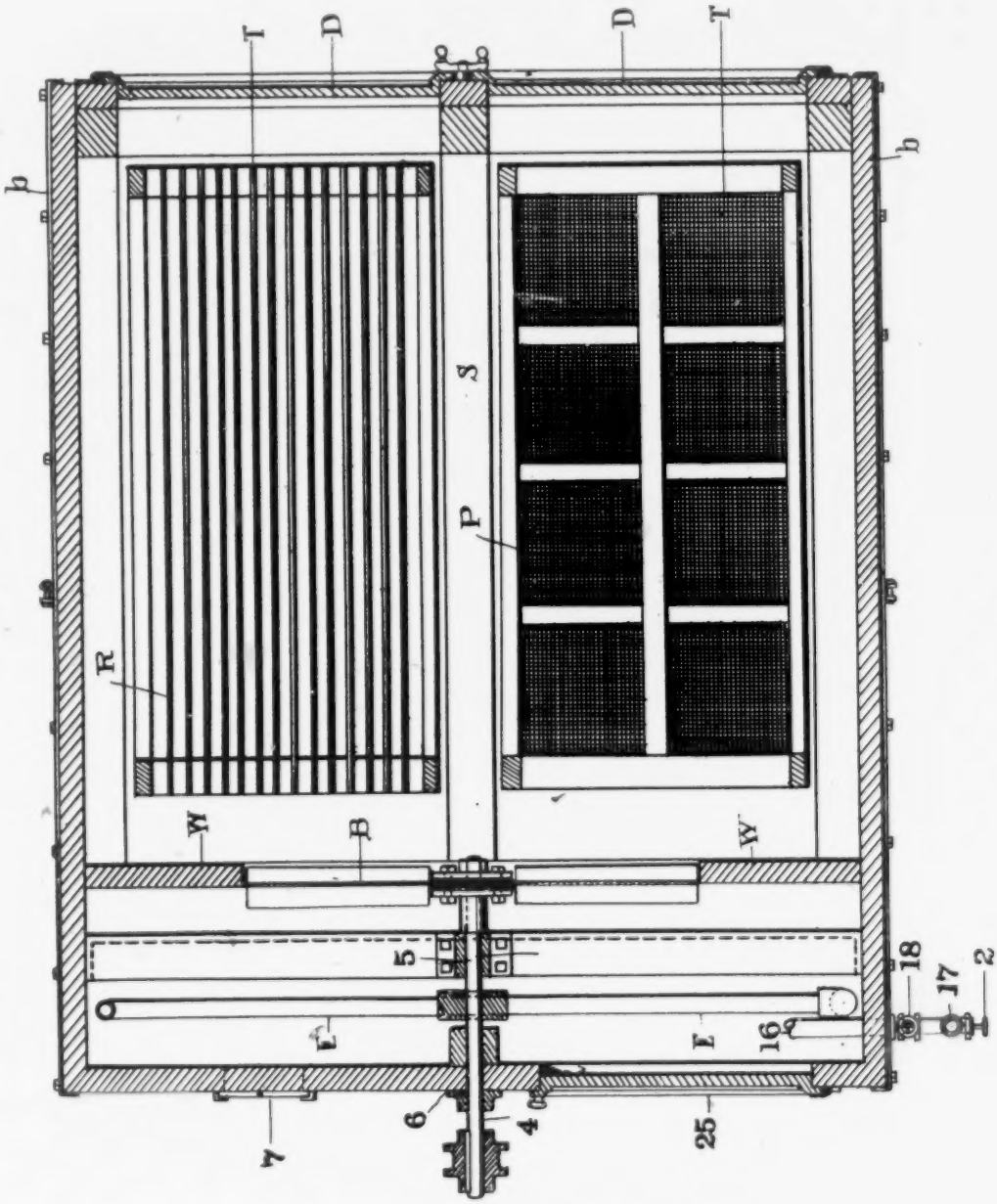

ATTEST
E. M. Fisher
F. C. Mason

INVENTORS
JOHN SCHMIDT,
HENRY SCHÜTTERLE
BY Fisher & Mason
ATTYS.

790

J. SCHMIDT & H. SCHÜTTERLE.

APPARATUS FOR DRYING MACARONI AND LIKE BAKERY PRODUCTS.

APPLICATION FILED JUNE 9, 1911.

1,010,809.

Patented Dec. 5, 1911.

5 SHEETS—SHEET 2.

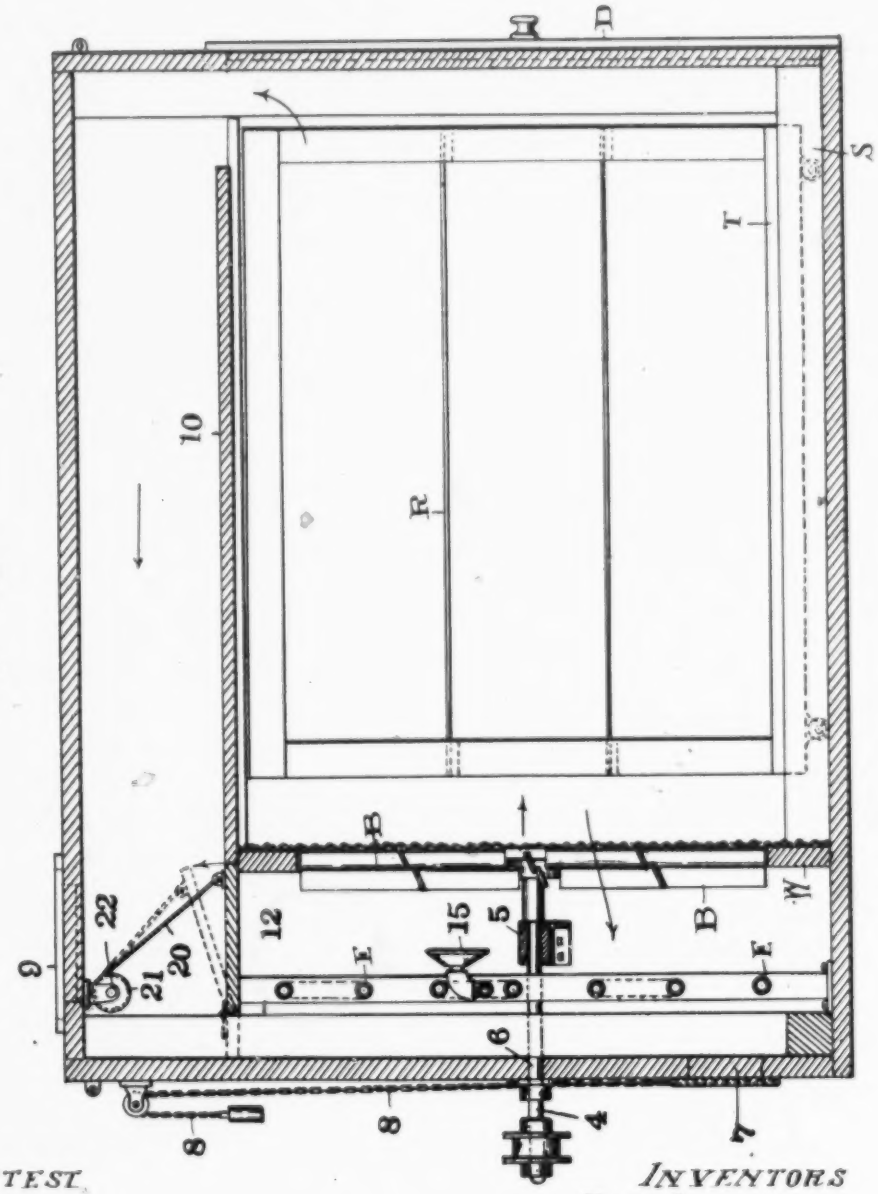

Fig. 2

ATTEST.

E M Fisher

H C Mussun

INVENTORS

JOHN SCHMIDT.

HENRY SCHÜTTERLE

BY Fisher & Mussun

ATTYS.

J. SCHMIDT & H. SCHÜTTERLE.

792

APPARATUS FOR DRYING MACARONI AND LIKE BAKERY PRODUCTS.

APPLICATION FILED JUNE 9, 1911.

1,010,809.

Patented Dec. 5, 1911.

5 SHEETS—SHEET 1.

Fig. 1

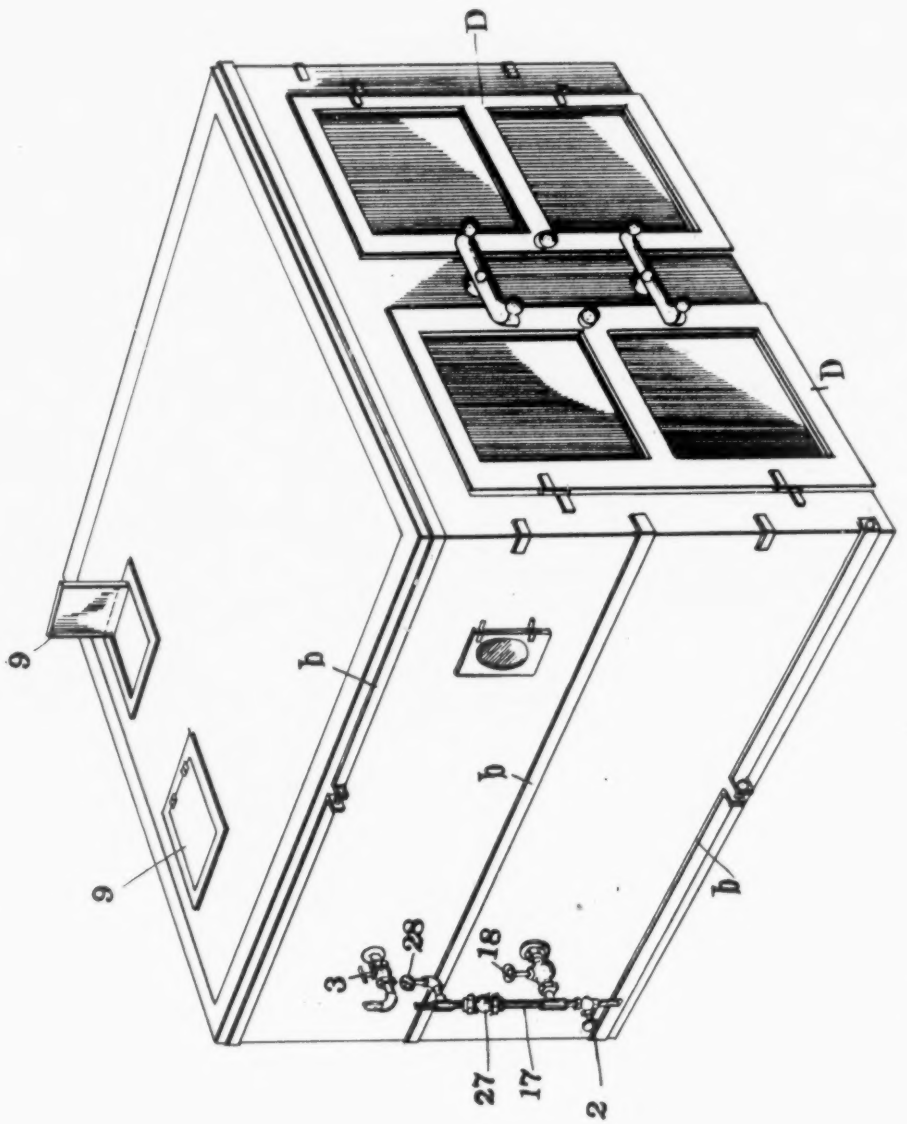

ATTEST

Em. G. Fisher

F. C. Mueseum.

INVENTORS.

JOHN SCHMIDT

HENRY SCHÜTTERLE.

By Fisher Hillard ATTYS.

UNITED STATES PATENT O

JOHN SCHMIDT AND HENRY SCHÜTTERLE, OF CHARDO

APPARATUS FOR DRYING MACARONI AND LIKE BAKERY

1,010,809. Specification of Letters Patent. Pate

Application filed June 9, 1911. Serial No. 632,155.

To all whom it may concern:

Be it known that we, JOHN SCHMIDT and HENRY SCHÜTTERLE, citizens of the United States, residing at Chardon, in the county of Geauga and State of Ohio, have invented certain new and useful Improvements in Apparatus for Drying Macaroni and Like Bakery Products, of which the following is a specification.

This invention has reference to apparatus for drying macaroni and like bakery products, and the invention consists in the construction and combination of parts substantially as shown and described and particularly pointed out in the claims.

In the accompanying drawings, Figure 1 is a perspective view of the invention. Fig. 2 is a longitudinal sectional elevation thereof substantially through the center. Fig. 3 is a longitudinal sectional plan view of the invention. Fig. 4 is a cross sectional elevation through the heating chamber, and Fig. 5 is a cross sectional view through the drying chamber showing the blower in the rear.

The apparatus as thus shown is designed especially for drying macaroni, but is not necessarily limited to this single use or product.

As shown the invention comprises an inclosure which is say about nine feet in length by about seven feet in width and about six feet in height, over all, and within this outer wall there are several distinct compartments. In the present views we show straps or bands *b* about the said wall as may be needed to hold the same firmly together, and the interior of the apparatus is variously sub-divided into chambers and compartments as the work to be done may require. Thus, the front and main portion of the apparatus comprises the drying chamber which is divided somewhat arbitrarily into two compartments longitudinally, the base sill S constituting part of the main frame being on this line of this division, and each compartment is entered at the front by a door D of a size large enough to run one of the trucks T into and out of the compartment. Said doors are hinged to swing outwardly and the trucks are on suitable wheels or casters and are run upon the floor of the apparatus without tracks in this instance. The said trucks or carriages are further constructed with such means as the particular material to be dried may require. For example, for long or string macaroni we find it advantageou of racks R upon which hung or suspended, poses we may use a seri P. These pans may be above the other and drawn out and replaced or both kinds of trucks equivalent, according stock to be dried. A t arates the said compar chamber, and the stea heating the air for th located in the said h trol of the steam flowi or pipes is by valves 2 lent, outside the main A fan or blower B is opening in the wall driven by shaft 4 from power, said shaft bei able bearings 5 and 6 the rear wall of the connections.

Admission of air t and exhaust is by m or dampers disposed necessary ventilation ample, the bottom rea more or less and sus tion by counterweig equivalent, and in th would be say by doo of the apparatus, th ing through exhaust through the drier the false top 10. B be desirable to me within the apparatus conditions the respe will be closed and t in the top 10 be ope in Fig. 2, more or le over the top of the with the blower in o caused to travel in a paratus and the incr take care of any fur

Sometimes it occu the material on the quires more surface sesses inherently, an ploy a steam spray saturates the air a ments. This sprayi pipe 16 with the m

J. SCHMIDT & H. SCHÜTTERLE.

ATUS FOR DRYING MACARONI AND LIKE BAKERY PRODUCTS.

APPLICATION FILED JUNE 9, 1911.

Patented Dec. 5, 1911.

5 SHEETS—SHEET 1.

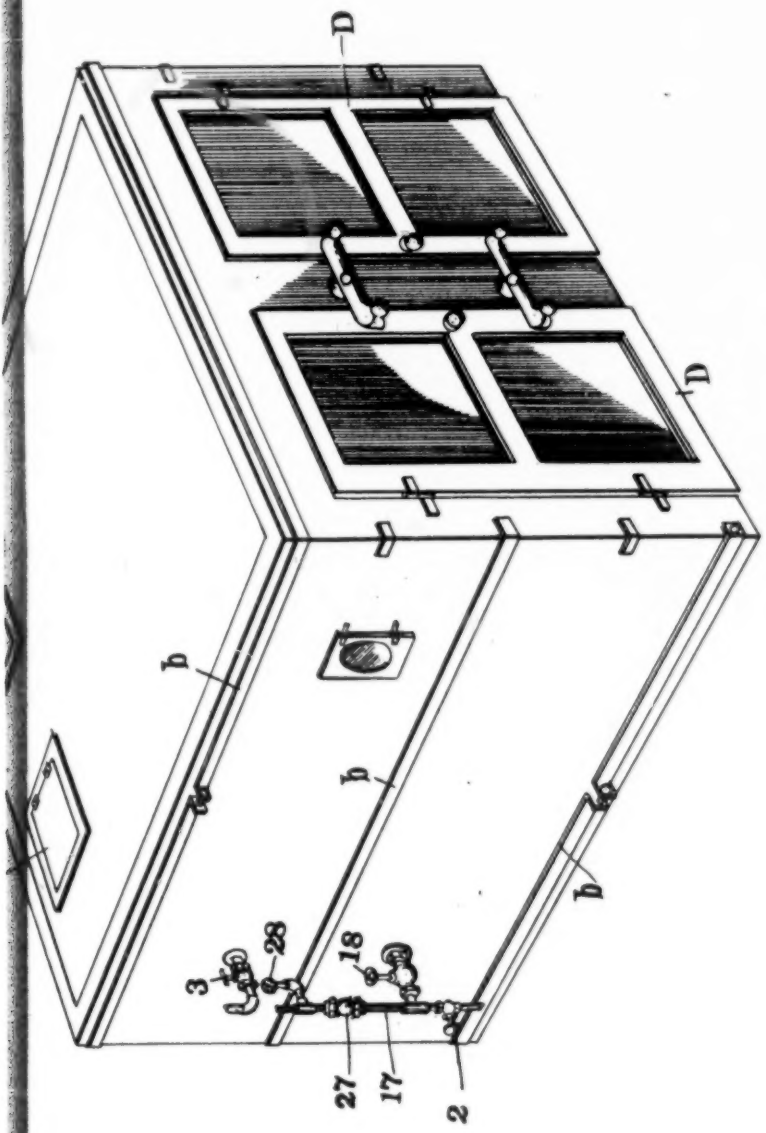

INVENTORS.

JOHN SCHMIDT

HENRY SCHÜTTERLE.

By Fisher Williams ATTYS.

UNITED STATES PATENT OFFICE.

JOHN SCHMIDT AND HENRY SCHÜTTERLE, OF CHARDON, OHIO.

APPARATUS FOR DRYING MACARONI AND LIKE BAKERY PRODUCTS.

1,010,809. Specification of Letters Patent. Patented Dec. 5, 1911.

Application filed June 9, 1911. Serial No. 632,155.

To all whom it may concern:

Be it known that we, JOHN SCHMIDT and HENRY SCHÜTTERLE, citizens of the United States, residing at Chardon, in the county of Geauga and State of Ohio, have invented certain new and useful Improvements in Apparatus for Drying Macaroni and Like Bakery Products, of which the following is a specification.

This invention has reference to apparatus for drying macaroni and like bakery products, and the invention consists in the construction and combination of parts substantially as shown and described and particularly pointed out in the claims.

In the accompanying drawings, Figure 1 is a perspective view of the invention. Fig. 2 is a longitudinal sectional elevation thereof substantially through the center. Fig. 3 is a longitudinal sectional plan view of the invention. Fig. 4 is a cross sectional elevation through the heating chamber, and Fig. 5 is a cross sectional view through the drying chamber showing the blower in the rear.

The apparatus as thus shown is designed especially for drying macaroni, but is not necessarily limited to this single use or product.

As shown the invention comprises an inclosure which is say about nine feet in length by about seven feet in width and about six feet in height, over all, and within this outer wall there are several distinct compartments. In the present views we show straps or bands *b* about the said wall as may be needed to hold the same firmly together, and the interior of the apparatus is variously sub-divided into chambers and compartments as the work to be done may require. Thus, the front and main portion of the apparatus comprises the drying chamber which is divided somewhat arbitrarily into two compartments longitudinally, the base sill S constituting part of the main frame being on this line of this division, and each compartment is entered at the front by a door D of a size large enough to run one of the trucks T into and out of the compartment. Said doors are hinged to swing outwardly and the trucks are on suitable wheels or casters and are run upon the floor of the apparatus without tracks in this instance. The said trucks or carriages are further constructed with such means as the particular material to be dried may require. For example, for long or string macaroni we find it advantageous to provide a series of racks R upon which the macaroni can be hung or suspended, while for other purposes we may use a series of wire screen pans P. These pans may be arranged in tiers one above the other and adapted to be bodily drawn out and replaced if preferred. Either or both kinds of trucks can be used, or their equivalent, according to kind or nature of stock to be dried. A transverse wall W separates the said compartments for the heater chamber, and the steam coils or pipes E for heating the air for the dried chamber are located in the said heater chamber. Control of the steam flowing through these coils or pipes is by valves 2 and 3, or their equivalent, outside the main wall of the apparatus. A fan or blower B is located in a suitable opening in the wall W, and said blower is driven by shaft 4 from any suitable source of power, said shaft being supported in suitable bearings 5 and 6 and extending through the rear wall of the apparatus for power connections.

Admission of air to the heating chamber and exhaust is by means of suitable doors or dampers disposed here and there as the necessary ventilation may suggest. For example, the bottom rear door 7 may be raised more or less and sustained in raised position by counterweighted chain 8, or its equivalent, and in that case exit or exhaust would be say by door or doors 9 in the top of the apparatus, the circulation of air being through exhaust fan or blower B and through the drier compartments beneath the false top 10. But if for any reason it be desirable to merely circulate the air within the apparatus under increasing heat conditions the respective inlets and outlets will be closed and the door or damper 12 in the top 10 be opened, say about as seen in Fig. 2, more or less. This extends across over the top of the heating chamber, and with the blower in operation the air will be caused to travel in a circuit through the apparatus and the increasing heat thereof will take care of any further absorbed moisture.

Sometimes it occurs that the condition of the material on the racks or in the pans requires more surface moisture than it possesses inherently, and in such cases we employ a steam spray 15 which more or less saturates the air and meets the requirements. This spraying head is connected by pipe 16 with the main steam supply pipe

17 and is controlled by valve 18. The door 12 is controlled in this instance from the side of the apparatus by a cord 20 over sheave 21 on rod 22 which has a ratchet head 23 outside the main wall and a pawl 24 to engage and hold the same. Entrance to the heating chamber is by door 25, Fig. 3. A steam pressure reducing valve 27 is employed in the steam pipe connection between valves 2 and 3 and a pressure gage 28 is shown in connection with said pipe 17.

What we claim is:

1. An apparatus for drying macaroni having a drying compartment provided with a draft passage front to rear in its top, and a door opening from the outside into the rear of said passage, a heating chamber across the rear of said drying compartment and a door at its top from said passage, a blower between said heating chamber and said compartment and a spraying device in said heating chamber.

2. An apparatus for drying macaroni having drying compartments side by side and a door to enter a truck at the front of each compartment opening down to the floor thereof, a heating chamber and a wall between the same and said compartments and steam heating pipes in said chamber, a blower to force the air from said heating chamber into said drying compartments located in the said wall, a draft passage over said compartments front to rear, a door opening from the discharge end of said passage into said heating chamber, and means in said drying chamber to moisten the air therein.

3. A macaroni drying apparatus comprising a heating chamber and a drying compartment in front thereof and a wall between said chamber and compartment, a rotary blower in said wall adapted to discharge into said compartment, a steam spray in said heating chamber behind said blower and arranged to discharge toward the same, and a steam supply pipe and valves to control the flow of steam to said spray.

In testimony whereof we affix our signatures in presence of two witnesses.

JOHN SCHMIDT.
HENRY SCHÜTTERLE.

Witnesses:
MIKE SHULLER,
SAM A. BARBER.

930 (Defendants' Exhibit P, Letters Patent No. 1,075,7
to C. W. Zimmer, October 14, 1913.)

by valve 18. The door this instance from the tus by a cord 20 over 22 which has a ratchet main wall and a pawl old the same. Entrance mber is by door 25, Fig. re reducing valve 27 is eam pipe connection be- 3 and a pressure gage nection with said pipe 17.

s:

s for drying macaroni compartment provided ge front to rear in its pening from the outside said passage, a heating rear of said drying com- oor at its top from said between said heating ompartment and a spray- heating chamber.

s for drying macaroni mpartments side by side r a truck at the front of pening down to the floor chamber and a wall be- d said compartments and steam heating pipes in said chamber, a blower to force the air from said heating chamber into said drying compartments located in the said wall, a draft passage over said compartments front to rear, a door opening from the discharge end of said passage into said heating chamber, and means in said drying chamber to moisten the air therein.

3. A macaroni drying apparatus comprising a heating chamber and a drying compartment in front thereof and a wall between said chamber and compartment, a rotary blower in said wall adapted to discharge into said compartment, a steam spray in said heating chamber behind said blower and arranged to discharge toward the same, and a steam supply pipe and valves to control the flow of steam to said spray.

In testimony whereof we affix our signatures in presence of two witnesses.

JOHN SCHMIDT.
HENRY SCHÜTTERLE.

Witnesses:
MIKE SHULLER,
SAM A. BARBER.

930 (Defendants' Exhibit P, Letters Patent No. 1,075,747 to C. W. Zimmer, October 14, 1913.)

796

C. W. ZIMMER.

SEMIFIRELESS INCUBATOR.

APPLICATION FILED DEC. 14, 1911.

1,075,747.

Patented Oct. 14, 1913.

3 SHEETS—SHEET 1.

Fig. 1.

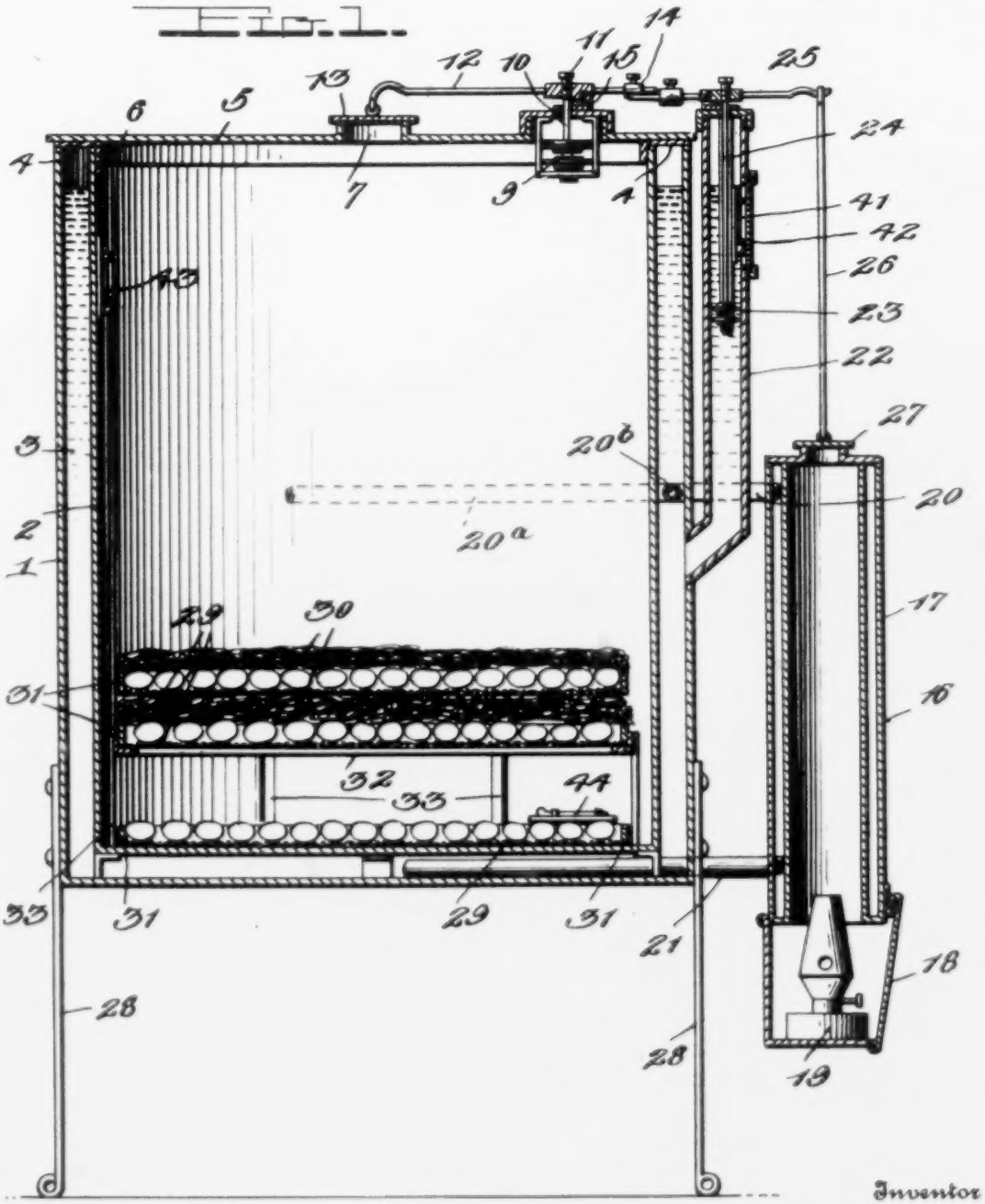

Inventor

Witnesses

Chas. L. Griebauer.

G. B. Norton.

Cyrus W. Zimmer,

By Watson E. Coleman.

Attorney

798

SEMITIRELESS INCUBATOR.

APPLICATION FILED DEC. 14, 1911.

1,075,747.

Patented Oct. 14, 1913.

3 SHEETS—SHEET 2.

Fig. 2.

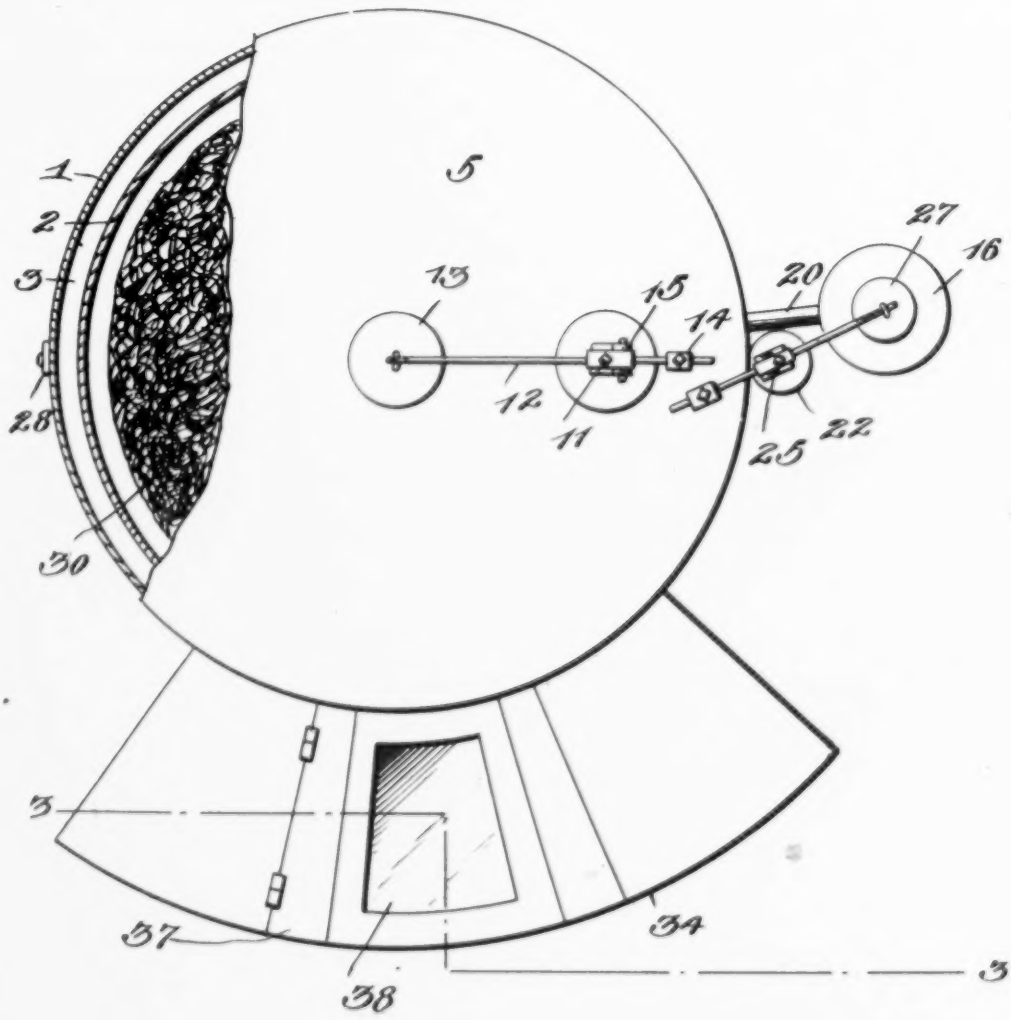

Witnesses
Chas. L. Griesbauer.
A. B. Norton.

Inventor
Cyrus W. Zimmer,
By Watson E. Coleman
Attorney

800

SEMIFIREELESS INCUBATOR.

APPLICATION FILED DEC. 14, 1911.

1,075,747.

Patented Oct. 14, 1913.

3 SHEETS—SHEET 3.

Fig. 3.

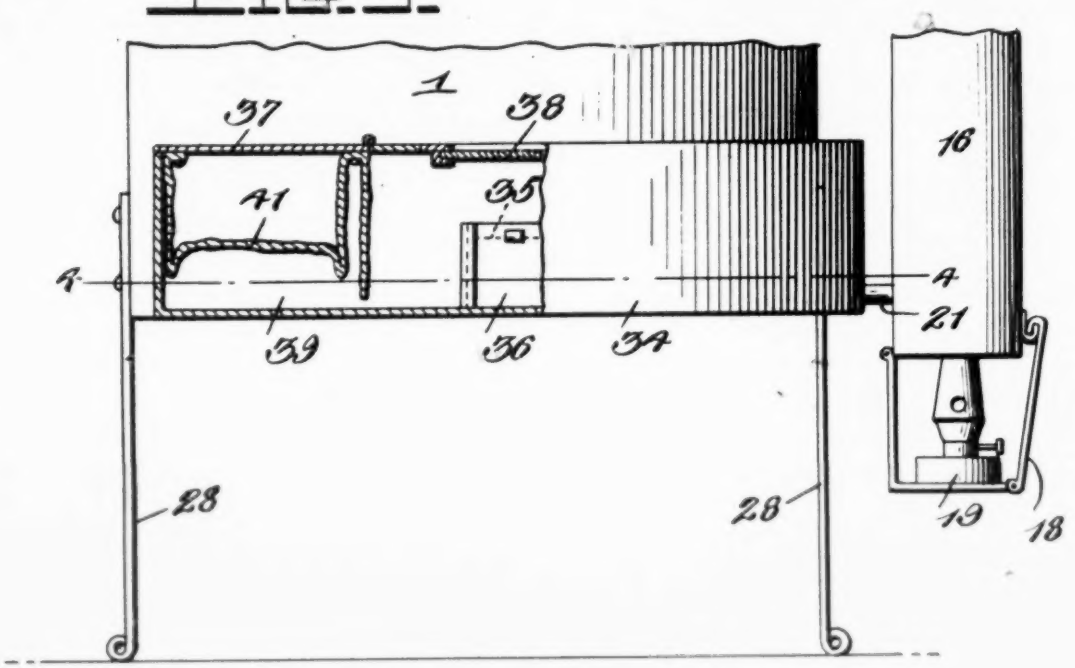

Fig. 4.

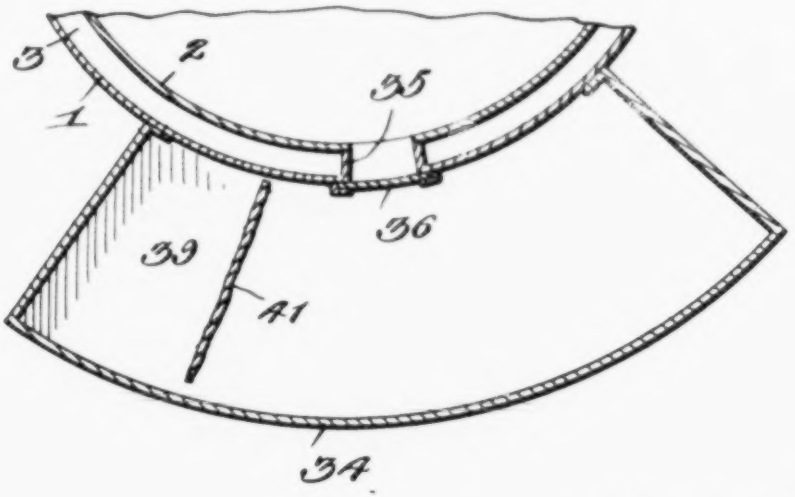

Inventor

Cyrus W. Zimmer,

Witnesses

Chas. L. Griesbauer.

G. B. Norton.

By Watson E. Coleman.

Attorney

UNITED STATES PATENT

CYRUS W. ZIMMER, OF NEW YORK, N. Y.

SEMIFIRELESS INCUBATOR.

1,075,747. Specification of Letters Patent. Pate

Application filed December 14, 1911. Serial No. 665,653.

To all whom it may concern:

Be it known that I, CYRUS W. ZIMMER, a citizen of the United States, residing at New York, in the county of New York and State of New York, have invented certain new and useful Improvements in Semifireless Incubators, of which the following is a specification, reference being had to the accompanying drawings.

This invention is an improved incubator, which I term a semi-fireless incubator and by means of which the animal heat of the eggs which, after having been partially incubated by artificially or externally applied heat may be utilized for incubating other eggs, supplied to the incubator from time to time, one object of my invention being to effect improvements in the construction of the incubator, whereby a uniformity of heat may be maintained.

The invention further consists in the construction, combination and arrangement of devices hereinafter described and claimed.

In the accompanying drawings: Figure 1 is a vertical sectional view of an incubator constructed in accordance with my invention; Fig. 2 is a plan view of the device with parts broken away. Fig. 3 is an elevation, partly in section of my improved incubator, showing a nursery on one side thereof, the nursery being indicated in section; and Fig. 4 is a fragmentary horizontal section through the device as seen on line 4—4, Fig. 3.

The body of my improved incubator comprises an outer shell or casing 1, here shown as cylindrical in form, and an inner vessel 2 which corresponds in shape with and is somewhat smaller than the outer shell and is spaced from the sides and bottom of the latter so that a water space 3 is formed between the bottoms and also between the side walls of the outer and inner vessels. These vessels are preferably made of sheet metal, but may be made of any suitable material. The water space between the vessels is closed at the top as at 4. A removable cover 5 is provided for the inner vessel which constitutes the incubating chamber, and said cover also extends over the top 4. This cover is here shown as provided with an annular flange 6 to fit within the wall of the inner vessel and also has a centrally located ventilating opening 7. On the under side of the cover and carried thereby is a thermostatic wafer 9 which is supported by a suitable bracket or h
static wafer actuates
ates in a small hole
contact with an adjus
by a weighted lever
damper 13 connected
disposed over the ope
being at the shorter e
lever, and the latter b
ed between a pair of e
cover is provided. A
of the incubator is a
prises a water jackete
end of which is a ca
lamp 19. The water
connected to the wate
the incubator by a flo
pipe 21, Hence, the
by the action of the la
of the flue passes into
body of the incubato
from the latter return
turn pipe 21, into th
ing flue and hence a
heated water is main
water jacketed heati
space of the incubato
in the incubating ch
kept substantially un

That portion of th
the incubator is pro
branches 20ª, which e
the water space 3, the
tice, extending about
ference of the incuba
the water in opposit
thirds of the way ar
the open ends of th
water from said pipe
gle with the water
Openings 20ᵇ are a
branches to permit o
the heated water at
the incubator. Thes
size and number an
cause the temperatu
water space or chamb
points. The water i
in contact with the b
the heated supply w
thereof to some exte
ing the temperature
the branches before i
therefrom and, hence
curing an equal dis
water.

APPLICATION FILED DEC. 14, 1911.

Patented Oct. 14, 1913.

3 SHEETS—SHEET 3.

FIG. 3.

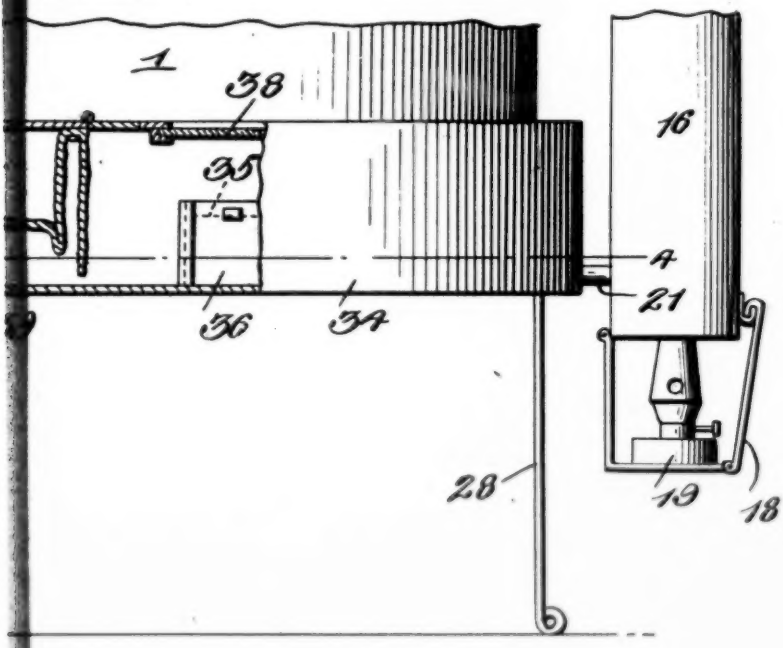

FIG. 4.

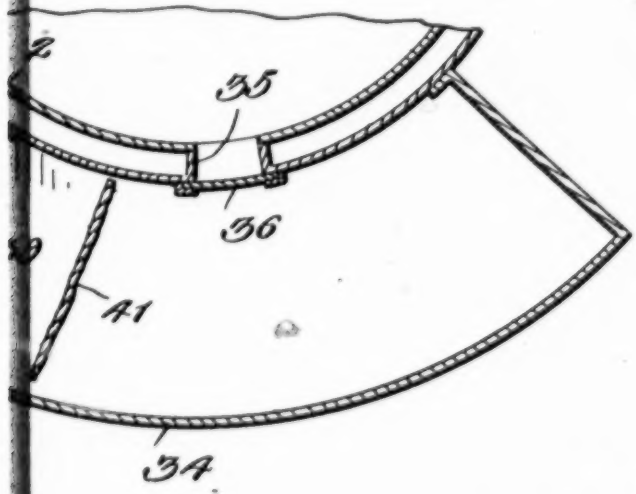

Inventor

Cyrus W. Zimmer,

...auer. By Watson E. Coleman.

Attorney

UNITED STATES PATENT OFFICE.

CYRUS W. ZIMMER, OF NEW YORK, N. Y.

SEMIFIRELESS INCUBATOR.

1,075,747. Specification of Letters Patent. Patented Oct. 14, 1913.

Application filed December 14, 1911. Serial No. 665,653.

To all whom it may concern:

Be it known that I, CYRUS W. ZIMMER, a citizen of the United States, residing at New York, in the county of New York and State of New York, have invented certain new and useful Improvements in Semifireless Incubators, of which the following is a specification, reference being had to the accompanying drawings.

This invention is an improved incubator which I term a semi-fireless incubator and by means of which the animal heat of the eggs which, after having been partially incubated by artificially or externally applied heat may be utilized for incubating other eggs, supplied to the incubator from time to time, one object of my invention being to effect improvements in the construction of the incubator, whereby a uniformity of heat may be maintained.

The invention further consists in the construction, combination and arrangement of devices hereinafter described and claimed.

In the accompanying drawings: Figure 1 is a vertical sectional view of an incubator constructed in accordance with my invention; Fig. 2 is a plan view of the device with parts broken away. Fig. 3 is an elevation, partly in section of my improved incubator, showing a nursery on one side thereof, the nursery being indicated in section; and Fig. 4 is a fragmentary horizontal section through the device as seen on line 4—4, Fig. 3.

The body of my improved incubator comprises an outer shell or casing 1, here shown as cylindrical in form, and an inner vessel 2 which corresponds in shape with and is somewhat smaller than the outer shell and is spaced from the sides and bottom of the latter so that a water space 3 is formed between the bottoms and also between the side walls of the outer and inner vessels. These vessels are preferably made of sheet metal, but may be made of any suitable material. The water space between the vessels is closed at the top as at 4. A removable cover 5 is provided for the inner vessel which constitutes the incubating chamber, and said cover also extends over the top 4. This cover is here shown as provided with an annular flange 6 to fit within the wall of the inner vessel and also has a centrally located ventilating opening 7. On the under side of the cover and carried thereby is a thermostatic wafer 9 which is supported by a suitable bracket or hanger. This thermostatic wafer actuates a pin 10 which operates in a small hole in the cover and is in contact with an adjusting screw 11 carried by a weighted lever 12, which lever has a damper 13 connected to its longer end and disposed over the opening 7, the weight 14 being at the shorter end of the arm of the lever, and the latter being pivotally mounted between a pair of ears 15 with which the cover is provided. At one side of the body of the incubator is a heater 16 which comprises a water jacketed flue 17, at the lower end of which is a carrier 18 for a suitable lamp 19. The water jacket of the flue 17 is connected to the water space of the body of the incubator by a flow pipe 20 and a return pipe 21, Hence, the water which is heated by the action of the lamp in the water jacket of the flue passes into the water space of the body of the incubator and the cooler water from the latter returns back, through the return pipe 21, into the water jacketed heating flue and hence a constant circulation of heated water is maintained throughout the water jacketed heating flue and the water space of the incubator and the temperature in the incubating chamber of the latter is kept substantially uniform.

That portion of the flow pipe 20 within the incubator is provided with two curved branches 20^a, which extend partly around in the water space 3, the two branches, in practice, extending about two-thirds the circumference of the incubator. This pipe carries the water in opposite directions about two-thirds of the way around the incubator and the open ends of the branches permit the water from said pipe to flow into and mingle with the water in the water space. Openings 20^b are also provided in these branches to permit of the partial escape of the heated water at different points around the incubator. These openings are of such size and number and are so located as to cause the temperature of the water in the water space or chamber to be the same at all points. The water in the water chamber is in contact with the branches 20^a containing the heated supply water, takes up the heat thereof to some extent and assists in reducing the temperature of the supply water in the branches before it is permitted to escape therefrom and, hence, this also assists in securing an equal distribution of the heated water.

A vertical pipe 22 leads from one side of the water space of the incubator body and is filled with water therefrom, and in this pipe is placed a thermostatic wafer 23 which is similar to the wafer 8 hereinbefore described and, through the instrumentality of a pin 24, operates a weighted lever 25, the longer arm of which is connected, by a wire 26, to a damper 27 which operates at the upper end of the water jacketed flue.

The wafer 9, in connection with the damper 13 of the incubating chamber, constitutes an auxiliary regulator, located on the lid of the incubator, which serves to allow the operator to permit a certain amount of ventilation for the incubating eggs all of the time, which ventilation may be increased or decreased at will. The auxiliary regulator also prevents the chicks from being killed by being overheated, in the event that the regulator for the heating apparatus should fail to operate.

The thermostatic wafer 23, in connection with the damper 27, directly controls the draft from the lamp and, hence, also the heating efficiency of the water jacketed flue and, thereby, my improved incubator is doubly regulated as to its temperature and hence I am enabled to readily maintain the required even temperature in the incubating chamber. Moreover, the incubating chamber is automatically ventilated, as will be understood. Suitable supporting legs such as are indicated at 28 are provided for the body of the incubator to support the same at the desired distance above the floor.

In practice, my incubator is preferably made of such size as to provide a capacity for a thousand eggs, the inner diameter of the inner vessel 2, which constitutes the incubating chamber, being twenty-two inches and the height thereof twenty-eight inches. The incubator may, however, be made of any size desired.

A series of removable egg trays 29 is also provided and a series of mats 30 which are preferably feather mats. The trays are made of wire mesh and each is provided with a metal rim 31. The diameter of the trays is less than that of the incubating chamber. In practice, where the incubating chamber is twenty-four inches in diameter I make the trays twenty-two inches in diameter so that when the trays are placed in the center of the incubating chamber there is an air space of one inch around them for ventilation.

In practice I employ a thermometer 41, in the pipe 22, suspended therein and submerged in the water. The pipe has a glazed opening 42 in one side, through which the said thermometer may be inspected. I also, when the incubator is in operation, use thermometers 43, suspended in the incubating chamber at different heights in the space around the layers of eggs, and I may also place a thermometer 44 in each egg tray, with the eggs under the feather mats, hence enabling the operator to know the temperature of the water which heats the incubator, the temperature of the air in the incubating chamber surrounding the eggs, as well as the temperature of the eggs in each and every tray.

In the operation of my incubator, and by my improved method of hatching, I introduce a layer of eggs, progressively from day to day. On the first day a layer of eggs is placed directly in the bottom of the incubating chamber, after the incubator has been artificially heated and while the heating apparatus is in operation, and a feather mat is placed on said layer. On the second day another layer is placed in the bottom of the incubating chamber, the first layer being placed in one of the trays and disposed on the new layer, and separated therefrom by a feather mat and also covered by another feather mat. I continue this process from day to day, supplying a new layer each day at the bottom of the incubating chamber and raising the other layers, so that the layers are disposed in the order of their ages, with the oldest eggs on top. I continue this for ten consecutive days. During this period the incubator is artificially heated and is kept at the usual incubating temperature, and I continue this artificial heating for two days longer, or until the twelfth day is reached and the upper layer of eggs is twelve days old in point of incubation. By this time incubation has so far progressed in the eggs of the upper layer that there is circulation of blood in the embryos of that layer and the said layer gives off considerable animal heat. At this point in the period of incubation the lamp is extinguished and the incubator allowed to cool gradually, and when it has become partially cooled all the trays containing the eggs are taken out of the incubator and a mat of feathers is placed on the bottom of the incubating chamber. The eggs are now replaced in the incubating chamber in reverse order to the former arrangement, that is to say, the oldest eggs in point of incubation are placed in first, at the bottom of the superimposed trays or layers of eggs, the newest eggs being on top. Hence, the eggs in which incubation has progressed so far as to cause them to give out animal heat are below the other eggs and this animal heat is utilized to maintain the required temperature in the incubating chamber and to continue the hatching of all of the eggs. The artificial heating may be wholly or partially discontinued or may be progressively reduced from day to day, according to the conditions.

It will be understood that each layer of eggs supports the weight of the eggs in the

upper layers and that the eggs in the bottom layer in which the process of incubation is the most advanced, support the weight of all the other eggs. The heat of the hatching eggs causes them to expand and apply pressure to the shells, thus tending to disintegrate the shells, and this disintegrating process is greatly promoted and facilitated by the weight of the superincumbent layers of eggs, the weight tending to flatten the lower eggs, change the shape of their shells and, hence, aiding in their decomposition and rendering them somewhat more brittle. This enables the chicks, when the hatching is complete, to be liberated more easily.

When the day arrives for the hatching of the lowest layer of eggs, said layer is relieved of the weight of the other layers. To effect this, the other layers are removed, a support is placed in the bottom of the incubator, and the layers of eggs are then replaced in the same order as before.

A suitable support is shown in Fig. 1 and comprises a circular form 32 having a series, say about six, of supporting legs 33. The height of this support is such that it forms a space of about an inch above the bottom layer and below the next lowest layer, thereby providing room for the chickens to hatch at the bottom of the incubator.

I also provide a nursery 34 for the newly hatched chickens. This nursery is on one side of the incubator, directly in contact therewith and is reached by the chicks through an opening 35 with which the incubator is provided, there being a slide 36 to cover this opening when desired. The nursery has a lid 37 provided with a glazed opening 38 which admits light thereto. The chicks after hatching and becoming strong enough to run around, see and are attracted by this light, which also shines through the opening 35, and go into the nursery chamber, where gravel would be placed on the floor. At one end of the nursery is a hover chamber 39, curtained off, as at 40, and provided with a hover blanket 41, suspended from the top, under which the chicks can cuddle for warmth, a considerable degree of heat being supplied by the warm air which comes in from the incubating chamber. The lid of the nursery may be a sliding one, capable of being opened either partially or entirely, as desired.

The feather mats
incubator to cover t
to retain heat and a
and closely approa
By making the egg
than the incubator
are placed the eggs
ber are kept surroun
air in the incubato
they are effectually v

The construction
incubator is such t
wide control over t
for successful incu
vary the number of
in the incubating c
quired to retain the
ture in the incubatin
ing conditions, as to
and cold, and the sea

Having thus des
claim:

An incubator com
an inner casing spa
provide a water spac
bottoms of the same,
outside of the outer
lower end thereof co
water space interm
lower ends thereof,
point above the top
adapted to contain w
as that in the wate
and maintain circula
including a heater,
therewith disposed
a damper for said fl
disposed in said pipe
be partially immers
means in connection
said wafer and said
cally regulating the
late the heating of
space, a removable t
ends of said casings,
with a damper, and
ried by said top an
units in the inner
cally regulating the

In testimony whe
signature in the pres

C

Witnesses:
HERBERT D.
JEREMIAH O.

om one side of
tor body and is
nd in this pipe
fer 23 which is
efore described
tality of a pin
r 25, the longer
y a wire 26, to
t the upper end

with the dam-
nber, constitutes
ed on the lid of
o allow the op-
mount of venti-
ggs all of the
be increased or
liary regulator
being killed by
t that the regu-
tus should fail

, in connection
y controls the
hence, also the
er jacketed flue
cubator is dou-
ature and hence
aintain the re-
the incubating
ubating cham-
ted, as will be
rting legs such
rovided for the
pport the same
the floor.
is preferably
vide a capacity
er diameter of
stitutes the in-
nty-two inches
y-eight inches.
be made of any

trays 29 is also
s 30 which are
The trays are
ch is provided
iameter of the
the incubating
the incubating
es in diameter
inches in diam-
are placed in
chamber there
round them for

rmometer 41, in
erein and sub-
pe has a glazed
ugh which the
pected. I also,
ation, use ther-
the incubating

around the layers of eggs, and I may also place a thermometer 44 in each egg tray, with the eggs under the feather mats, hence enabling the operator to know the temperature of the water which heats the incubator, the temperature of the air in the incubating chamber surrounding the eggs, as well as the temperature of the eggs in each and every tray.

In the operation of my incubator, and by my improved method of hatching, I introduce a layer of eggs, progressively from day to day. On the first day a layer of eggs is placed directly in the bottom of the incubating chamber, after the incubator has been artificially heated and while the heating apparatus is in operation, and a feather mat is placed on said layer. On the second day another layer is placed in the bottom of the incubating chamber, the first layer being placed in one of the trays and disposed on the new layer, and separated therefrom by a feather mat and also covered by another feather mat. I continue this process from day to day, supplying a new layer each day at the bottom of the incubating chamber and raising the other layers, so that the layers are disposed in the order of their ages, with the oldest eggs on top. I continue this for ten consecutive days. During this period the incubator is artificially heated and is kept at the usual incubating temperature, and I continue this artificial heating for two days longer, or until the twelfth day is reached and the upper layer of eggs is twelve days old in point of incubation. By this time incubation has so far progressed in the eggs of the upper layer that there is circulation of blood in the embryos of that layer and the said layer gives off considerable animal heat. At this point in the period of incubation the lamp is extinguished and the incubator allowed to cool gradually, and when it has become partially cooled all the trays containing the eggs are taken out of the incubator and a mat of feathers is placed on the bottom of the incubating chamber. The eggs are now replaced in the incubating chamber in reverse order to the former arrangement, that is to say, the oldest eggs in point of incubation are placed in first, at the bottom of the superimposed trays or layers of eggs, the newest eggs being on top. Hence, the eggs in which incubation has progressed so far as to cause them to give out animal heat are below the other eggs and this animal heat is utilized to maintain the required temperature in the incubating chamber and to continue the hatching of all of the eggs. The artificial heating may be wholly or partially discontinued or may be progressively reduced from day to day, according to the conditions.

It will be understood that each layer of eggs supports the weight of the eggs in the

upper layers and that the eggs in the bottom layer in which the process of incubation is the most advanced, support the weight of all the other eggs. The heat of the hatching eggs causes them to expand and apply pressure to the shells, thus tending to disintegrate the shells, and this disintegrating process is greatly promoted and facilitated by the weight of the superincumbent layers of eggs, the weight tending to flatten the lower eggs, change the shape of their shells and, hence, aiding in their decomposition and rendering them somewhat more brittle. This enables the chicks, when the hatching is complete, to be liberated more easily.

When the day arrives for the hatching of the lowest layer of eggs, said layer is relieved of the weight of the other layers. To effect this, the other layers are removed, a support is placed in the bottom of the incubator, and the layers of eggs are then replaced in the same order as before.

A suitable support is shown in Fig. 1 and comprises a circular form 32 having a series, say about six, of supporting legs 33. The height of this support is such that it forms a space of about an inch above the bottom layer and below the next lowest layer, thereby providing room for the chickens to hatch at the bottom of the incubator.

I also provide a nursery 34 for the newly hatched chickens. This nursery is on one side of the incubator, directly in contact therewith and is reached by the chicks through an opening 35 with which the incubator is provided, there being a slide 36 to cover this opening when desired. The nursery has a lid 37 provided with a glazed opening 38 which admits light thereto. The chicks after hatching and becoming strong enough to run around, see and are attracted by this light, which also shines through the opening 35, and go into the nursery chamber, where gravel would be placed on the floor. At one end of the nursery is a hover chamber 39, curtained off, as at 40, and provided with a hover blanket 41, suspended from the top, under which the chicks can cuddle for warmth, a considerable degree of heat being supplied by the warm air which comes in from the incubating chamber. The lid of the nursery may be a sliding one, capable of being opened either partially or entirely, as desired.

The feather mats which I employ in my incubator to cover the layers of eggs serve to retain heat and also to ventilate the eggs and closely approach natural conditions. By making the egg trays of less diameter than the incubator chamber in which they are placed the eggs in the incubator chamber are kept surrounded on all sides by the air in the incubator chamber and, hence, they are effectually ventilated.

The construction of my improved fireless incubator is such that the operator has a wide control over the necessary conditions for successful incubation, in that he can vary the number of cover mats over the eggs in the incubating chamber as may be required to retain the necessary heat and moisture in the incubating chamber under varying conditions, as to locality, altitude, heat and cold, and the season of the year.

Having thus described my invention I claim:

An incubator comprising an outer casing, an inner casing spaced from the latter to provide a water space between the sides and bottoms of the same, a vertical pipe disposed outside of the outer casing and having the lower end thereof communicating with said water space intermediate the upper and lower ends thereof, said pipe extending to a point above the top of the outer casing and adapted to contain water to the same height as that in the water space, means to heat and maintain circulation in said water space including a heater, and a flue in connection therewith disposed beyond the outer casing, a damper for said flue, a thermostatic wafer disposed in said pipe from the top thereof to be partially immersed in the water therein, means in connection with the upper end of said wafer and said damper for thermostatically regulating the latter, whereby to regulate the heating of the water in the water space, a removable top applied to the upper ends of said casings, said top being provided with a damper, and additional means carried by said top and actuated by the heat units in the inner casing for thermostatically regulating the last mentioned damper.

In testimony whereof I hereunto affix my signature in the presence of two witnesses.

CYRUS W. ZIMMER.

Witnesses:
HERBERT D. COHEN,
JEREMIAH O. CROWLEY.

805

No. 2119 Ed

Def. Ex. Q

URE'S DICTIONARY

OF

ARTS, MANUFACTURES AND MINES

CONTAINING A

CLEAR EXPOSITION OF THEIR PRINCIPLES AND PRACTICE

EDITED BY ROBERT HUNT, F.R.S.

Keeper of Mining Records

Formerly Professor of Physics, Royal School of Mines, &c. &c.

ASSISTED BY NUMEROUS CONTRIBUTORS EMINENT IN SCIENCE AND FAMILIAR WITH MANUFACTURES

Illustrated with nearly 2,000 Engravings on Wood

SIXTH EDITION, CHIEFLY REWRITTEN AND GREATLY ENLARGED

IN THREE VOLUMES—VOL. II.

MINNE

URE'S DICTIONARY

OF

ARTS, MANUFACTURES AND MINES

CONTAINING A

CLEAR EXPOSITION OF THEIR PRINCIPLES AND PRACTICE

EDITED BY ROBERT HUNT, F.R.S.

Keeper of Mining Records

Formerly Professor of Physics, Royal School of Mines, &c. &c.

ASSISTED BY NUMEROUS CONTRIBUTORS EMINENT IN SCIENCE AND FAMILIAR WITH MANUFACTURES

Illustrated with nearly 2,000 Engravings on Wood

SIXTH EDITION, CHIEFLY REWRITTEN AND GREATLY ENLARGED

IN THREE VOLUMES—VOL. II.

MINNEAPOLIS ATHENÆUM

LONDON

LONGMANS, GREEN, AND CO.

1867

The right of translation is reserved

carry on some public service; and the person to whom the advance is made is called the "imprest accountant."

INCUBATION, ARTIFICIAL. The Egyptians have from time immemorial been accustomed to hatch eggs by artificial warmth, without the aid of hens, in peculiar stoves, called *Mammals*. M. de Reaumur published in France, about a century ago, some ingenious observations upon this subject; but M. Bonnemain was the first person who studied with due attention all the circumstances of artificial incubation, and mounted the process successfully upon the commercial scale. So far back as 1777 he communicated to the Academy of Sciences an interesting fact, which he had noticed, upon the mechanism employed by chicks to break their shells; and for some time prior to the French revolution he furnished the Parisian market with excellent poultry at a period of the year when the farmers had ceased to supply it. His establishment was ruined at that disastrous era, and no other has ever since been constructed or conducted with similar care. His apparatus derives peculiar interest from the fact that it was founded upon the principle of the circulation of hot water, by the intestine motions of its particles, in a returning series of connected pipes; a subject afterwards illustrated in the experimental researches of Count Rumford. It has of late years been introduced as a *novelty* into this country, and applied to warm the apartments of many public and private buildings. The following details will prove that the theory and practice of hot water circulation were as perfectly understood by M. Bonnemain fifty years ago, as they are at the present day. They were then publicly exhibited at his residence in Paris, and were afterwards communicated to the world at large in the interesting article of the *Encyclopédie Technologique*, intitled *Incubation Artificielle*, under the head of *Régulateur de Température*.

The apparatus of M. Bonnemain consisted: 1, of a boiler and pipes for the circulation of water; 2, of a regulator calculated to maintain an equable temperature; 3, of a stove-apartment, heated constantly to the degree best fitted for incubation, which he called the *hatching* pitch. He attached to one side a *poussinière* or chick-room, for cherishing the chickens during a few days after incubation.

The boiler is represented in vertical section and ground plan, in *figs.* 987 and 988. It is composed of a double cylinder of copper or cast iron *l*, *l*, having a grate *b* (see plan), an ashpit at *d* (section). The water occupies the shaded space c, c. *h*, *g*, *g*, *e*, *e*, are five vertical flues for conducting the burnt air and smoke, which first rise in the two exterior flues *e*, *e*, then descend in the two adjoining flues *g*, *g*, and finally remount through the passages *i*, *i*, in the central flue *h*. During this upwards and downwards circulation, as shown by the arrows in the section, the products of combustion are made to impart nearly the whole of their heat to the water by which they are surrounded. At the commencement, some burning paper or wood shavings are inserted at the orifice *m*, to establish a draught in this circuitous chimney. The air is admitted into the ashpit at the side, in regulated quantities, through a small square door, movable round a rod which runs horizontally along its middle line. This swing valve is acted upon by an expanding bar (see HEAT-REGULATOR), which opens it more or less, according to the temperature of the stove apartment in which the eggs are placed.

987

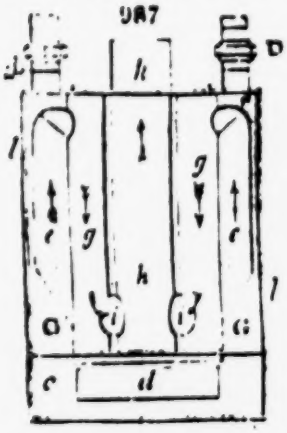

D is the upper orifice of the boiler, by which the hotter and consequently lighter particles of the water continually ascend, and are replaced by the cooled particles, which enter the boiler near its bottom, as shown in *fig.* 989 at R. Into further details relative to the boiler it is needless to enter; for though its form, as designed by M. Bonnemain, is excellent and most economical of heat for a charcoal fire, it would not suit one of pit-coal, on account of the obstruction to the pipes which would soon be caused by its soot.

In *fig.* 989 the boiler is shown at R, with the rod which regulates the air door of the ashpit. D is a stopcock for modifying the opening by which the hotter particles of water ascend; G is the water pipe of communication, having the heating pipe of distribution attached between E F, which thence passes backwards and forwards with a very slight slope from the horizontal direction, till it reaches the *poussinière* O P Q. It traverses this apartment, and returns by N N to the orifice of the boiler H, where it turns vertically downwards, and descends to nearly the bottom of the boiler, discharging at that point the cooled and therefore denser particles of water to replace those which

been accustomed to hatch eggs by artificial warmth, without the aid of hens, in peculiar stoves, called *Mammals*. M. de Reaumur published in France, about a century ago, some ingenious observations upon this subject; but M. Bonnemain was the first person who studied with due attention all the circumstances of artificial incubation, and mounted the process successfully upon the commercial scale. So far back as 1777 he communicated to the Academy of Sciences an interesting fact, which he had noticed, upon the mechanism employed by chicks to break their shells; and for some time prior to the French revolution he furnished the Parisian market with excellent poultry at a period of the year when the farmers had ceased to supply it. His establishment was ruined at that disastrous era, and no other has ever since been constructed or conducted with similar care. His apparatus derives peculiar interest from the fact that it was founded upon the principle of the circulation of hot water, by the intestine motions of its particles, in a returning series of connected pipes; a subject afterwards illustrated in the experimental researches of Count Rumford. It has of late years been introduced as a *novelty* into this country, and applied to warm the apartments of many public and private buildings. The following details will prove that the theory and practice of hot water circulation were as perfectly understood by M. Bonnemain fifty years ago, as they are at the present day. They were then publicly exhibited at his residence in Paris, and were afterwards communicated to the world at large in the interesting article of the *Encyclopédie Technologique*, intitled *Incubation Artificielle*, under the head of *Régulateur de Température*.

The apparatus of M. Bonnemain consisted: 1, of a boiler and pipes for the circulation of water; 2, of a regulator calculated to maintain an equable temperature; 3, of a stove-apartment, heated constantly to the degree best fitted for incubation, which he called the *hatching* pitch. He attached to one side a *poussinière* or chick-room, for cherishing the chickens during a few days after incubation.

The boiler is represented in vertical section and ground plan, in *figs.* 987 and 988. It is composed of a double cylinder of copper or cast iron *l*, *l*, having a grate *b* (see plan), an ashpit at *d* (section). The water occupies the shaded space c, c. *h*, *g*, *g*, *e*, *e*, are five vertical flues for conducting the burnt air and smoke, which first rise in the two exterior flues *e*, *e*, then descend in the two adjoining flues *g*, *g*, and finally remount through the passages *i*, *i*, in the central flue *h*. During this upwards and downwards circulation, as shown by the arrows in the section, the products of combustion are made to impart nearly the whole of their heat to the water by which they are surrounded. At the commencement, some burning paper or wood shavings are inserted at the orifice *m*, to establish a draught in this circuitous chimney. The air is admitted into the ashpit at the side, in regulated quantities, through a small square door, movable round a rod which runs horizontally along its middle line. This swing valve is acted upon by an expanding bar (see HEAT-REGULATOR), which opens it more or less, according to the temperature of the stove apartment in which the eggs are placed.

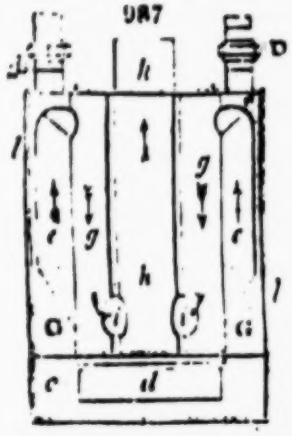

D is the upper orifice of the boiler, by which the hotter and consequently lighter particles of the water continually ascend, and are replaced by the cooled particles, which enter the boiler near its bottom, as shown in *fig.* 989 at R. Into further details relative to the boiler it is needless to enter; for though its form, as designed by M. Bonnemain, is excellent and most economical of heat for a charcoal fire, it would not suit one of pit-coal, on account of the obstruction to the pipes which would soon be caused by its soot.

In *fig.* 989 the boiler is shown at R, with the rod which regulates the air door of the ashpit. D is a stopcock for modifying the opening by which the hotter particles of water ascend; G is the water pipe of communication, having the heating pipe of distribution attached between E F, which thence passes backwards and forwards with a very slight slope from the horizontal direction, till it reaches the *poussinière* O P Q. It traverses this apartment, and returns by N N to the orifice of the boiler H, where it turns vertically downwards, and descends to nearly the bottom of the boiler, discharging at that point the cooled and therefore denser particles of water to replace those which continually issue upwards at D. L R is a tube surmounted with a funnel for keeping the range of pipes always full of water; and K is a siphon orifice for permitting the escape of the disengaged air, which would otherwise be apt to occupy partially the pipes and obstruct the aqueous circulation.

The faster the water gets cooled in the serpentine tubes, the quicker its circulation will be, because the difference of density between the water at the top and bottom of

988

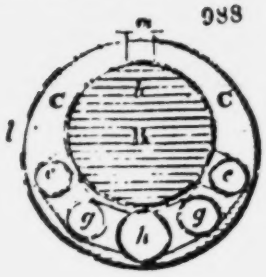

989

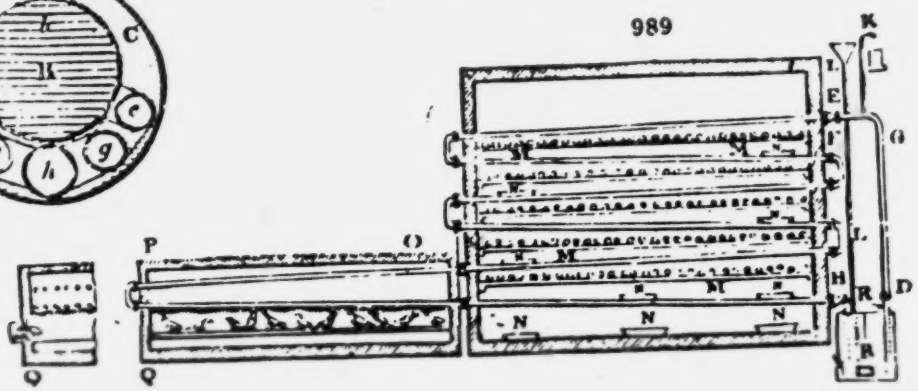

the boiler, which is the sole cause of its movement, will be greater. N represents small saucers filled with water, to supply the requisite moisture to the heated air, and to place the eggs, arranged along the trays M M, in an atmosphere analogous to that under the body of the hen.

When we wish to hatch eggs with this apparatus, the fire is to be kindled in the boiler, and as soon as the temperature has risen to about 100° F., the eggs are introduced; but only one-twentieth of the whole number intended, upon the first day: next day a like number is laid upon the trays, and thus in succession for twenty days, so that upon the twenty-first day the eggs first placed may be hatched for the most part, and we may obtain daily afterwards an equal number of chicks. In this way regularity of care is established in the rearing of them.

During the first days of incubation, natural as well as artificial, a small portion of the water contained in the egg evaporates by the heat, through the shell, and is replaced by a like quantity of air, which is afterwards useful for the respiration of the animal. If the warm atmosphere surrounding the eggs were very dry, such a portion of the aqueous part of the eggs would evaporate through the pores of the shells as would endanger the future life of the chick *in ovo*. The transpiration from the body of the hen, as she sits upon her eggs, counteracts this desiccation in general; yet in very dry weather many hatching eggs fail from that cause, unless they be placed in moist decomposing straw. The water saucers N N are therefore essential to success in artificial incubation.

After the chickens are hatched they are transferred into the nursery, O Q, on the front side of which there is a small grated trough filled with millet seed. Small divisions are made between the broods of successive days, to enable the superintendent to vary their feeding to their age.

In order to supply an establishment of the common kind, where 100 eggs are to be hatched daily, a dozen of hens would be needed, and 150 eggs must be placed under them, as only two-thirds in general succeed. At this rate, 4300 mothers would be required to sit. Now supposing we should collect ten times as many hens, or 43,000, we should not be able to command the above number of chickens, as there is seldom a tenth part of hens in a brooding state. Besides, there would be in this case no fewer than 720 hens every day coming out with a fresh brood of chickens, which would require a regiment of superintendents.

Artificial Incubation by means of Hot Mineral Waters. — This curious process is described very briefly in a letter by M. D'Arcet. The following are extracts from his letter: —

"In June, 1825, I obtained chickens and pigeons at Vichy, by artificial incubation, effected through the means of the thermal waters of that place. In 1827 I went to the baths of Chaudes-Aigues, principally for the purpose of doing the same thing there. Finding the proprietor a zealous man, I succeeded in making a useful application of this source of heat to the production of poultry.

"The advantage of this process may be comprehended, when it is known that the invalids who arrive at Vichy, for instance in the month of May, find chickens only the

The faster the water gets cooled in the serpentine tubes, the quicker its circulation will be, because the difference of density between the water at the top and bottom of

988

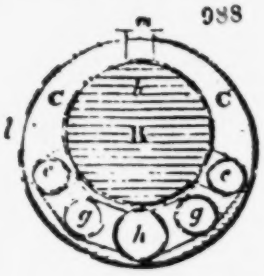

989

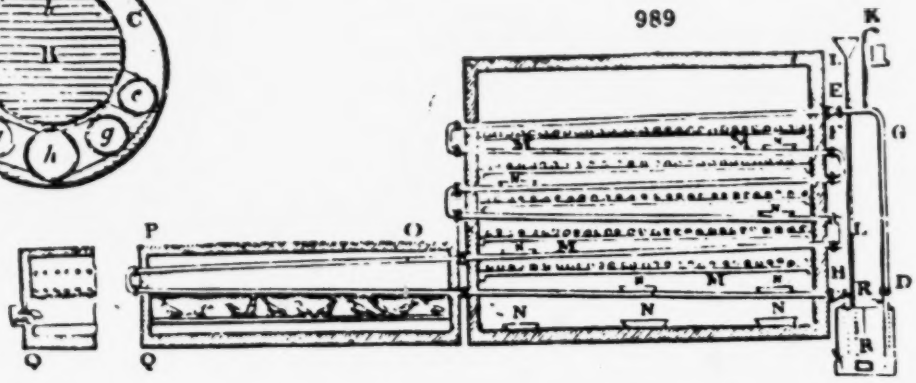

the boiler, which is the sole cause of its movement, will be greater. N represents small saucers filled with water, to supply the requisite moisture to the heated air, and to place the eggs, arranged along the trays M M, in an atmosphere analogous to that under the body of the hen.

When we wish to hatch eggs with this apparatus, the fire is to be kindled in the boiler, and as soon as the temperature has risen to about 100° F., the eggs are introduced; but only one-twentieth of the whole number intended, upon the first day: next day a like number is laid upon the trays, and thus in succession for twenty days, so that upon the twenty-first day the eggs first placed may be hatched for the most part, and we may obtain daily afterwards an equal number of chicks. In this way regularity of care is established in the rearing of them.

During the first days of incubation, natural as well as artificial, a small portion of the water contained in the egg evaporates by the heat, through the shell, and is replaced by a like quantity of air, which is afterwards useful for the respiration of the animal. If the warm atmosphere surrounding the eggs were very dry, such a portion of the aqueous part of the eggs would evaporate through the pores of the shells as would endanger the future life of the chick *in ovo*. The transpiration from the body of the hen, as she sits upon her eggs, counteracts this desiccation in general; yet in very dry weather many hatching eggs fail from that cause, unless they be placed in moist decomposing straw. The water saucers N N are therefore essential to success in artificial incubation.

After the chickens are hatched they are transferred into the nursery, O Q, on the front side of which there is a small grated trough filled with millet seed. Small divisions are made between the broods of successive days, to enable the superintendent to vary their feeding to their age.

In order to supply an establishment of the common kind, where 100 eggs are to be hatched daily, a dozen of hens would be needed, and 150 eggs must be placed under them, as only two-thirds in general succeed. At this rate, 4300 mothers would be required to sit. Now supposing we should collect ten times as many hens, or 43,000, we should not be able to command the above number of chickens, as there is seldom a tenth part of hens in a brooding state. Besides, there would be in this case no fewer than 720 hens every day coming out with a fresh brood of chickens, which would require a regiment of superintendents.

Artificial Incubation by means of Hot Mineral Waters. — This curious process is described very briefly in a letter by M. D'Arcet. The following are extracts from his letter: —

"In June, 1825, I obtained chickens and pigeons at Vichy, by artificial incubation, effected through the means of the thermal waters of that place. In 1827 I went to the baths of Chaudes-Aigues, principally for the purpose of doing the same thing there. Finding the proprietor a zealous man, I succeeded in making a useful application of this source of heat to the production of poultry.

"The advantage of this process may be comprehended, when it is known that the invalids who arrive at Vichy, for instance in the month of May, find chickens only the size of quails; whereas, by this means, they may be readily supplied six months old.

"The good which may be done by establishing artificial incubation in places where hot springs exist, is *incalculable*; it may be introduced into these establishments without at all interfering with the medical treatment of patients, since the hatching would go on in winter, at a time when the baths for other purposes are out of use.

Ven'ti-lat'ing Mill-stones. The system of ventilating mill-stones by vacuum or plenum, by a blast of air in the eye or a suction-fan to the case, seems to have been invented about 1844.

See English patents:	Newton, 11,084	A. D. 1846.
	Gordon, 10,163	" 1844.
Belgian patent:	Houyet and Gendebein	" 1844.
French patents:	Cabanes	May 29, 1845.
	Cabanes	May 26, 1846.

Fig. 6957 may be taken as an illustration. The collar is connected to the curb by the elastic annular diaphragm, and its lower edge is received in an annular groove in the top of the stone. The air passes down the central opening in the collar and the eye of the stone, passing between the stones and up through the vertical spout to the fan The meal has the usual exit.

Fig. 6957.

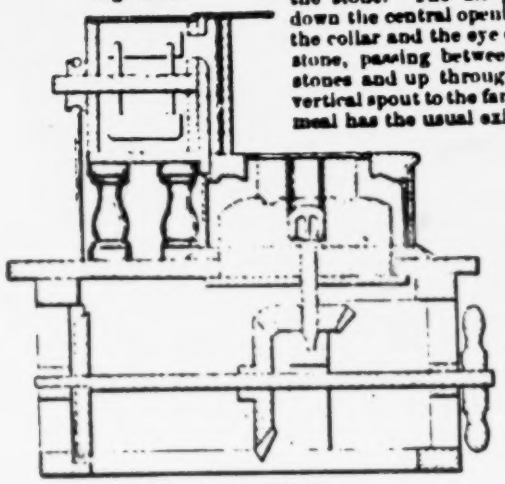

Ventilated Mill-Stone.

Ven'ti-lat'ing-stack. (*Mining.*) A high stack with a partition and air-furnaces, and connected with the ventilating-flue.

Ven'ti-lat'ing Wa'ter-wheel. The water-wheel bucket has an escape for the air toward the interior of the wheel, so as to allow the bucket to fill without confining the air, and to escape freely on reaching the position of discharge.

Fig 6958.

Ventilating Water-Wheel.

It appears to have been first introduced in Scotland, and to have been suggested by the violent eruption of water incident to the confining of the air in the bucket, in some cases forcing a spray to the hight of 6 or 8 feet. The arrows mark the course of the escaping air, from *a* to *b*.

Ven'ti-la'tor. An arrangement for supplying fresh and removing vitiated air from buildings, mines, or other places. This may be effected either by withdrawing the foul air and permitting the fresh air to flow in and supply its place (the *vacuum* process); or by forcing in fresh air (the *plenum* process), which drives the foul air before it to the exit. A combination of both processes is also used in certain cases.

In 1723, Dr. Desaguliers introduced a plan for ventilating the House of Commons by means of fires in upper apartments, which drew the air upward through openings at each angle of the House, whence it was conducted to the chimneys. This plan was not permitted to have a fair trial, and was succeeded by the centrifugal fan, invented by Desaguliers in 1734. One of these was erected over the ceiling of the House, and continued to do duty until 1817, being subsequently superseded by the [illegible] constructed by the Marquis de Chabannes.

About the same period, Sutton proposed to ventilate ships by pipes leading from the well and other parts of the vessel to the galley fire, which was to receive its sole supply of air through these tubes.

Fig. 6959.

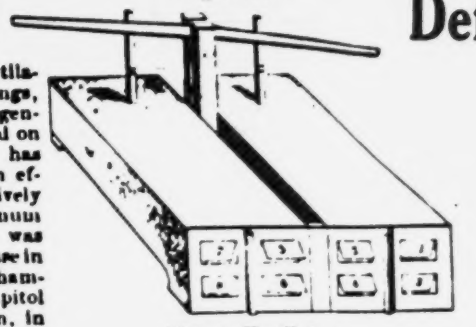

Hales's Ventilator.

1. The ventilation of buildings, though more generally conducted on the exhaust, has sometimes been effected exclusively on the plenum principle, as was formerly the case in the Senate Chamber of the Capitol at Washington, in which a combination of both methods is now adopted. General Morin, Director of the Imperial Conservatory of Arts and Trades under the late French Empire, an authority in matters of this kind, gives a decided preference to the vacuum method, for the reasons that the vitiated air is more certainly withdrawn than it can be when expelled by forcing, and on account of the machinery necessarily employed, requiring skilled labor to attend it, which is indispensable in the latter method; while the former, requiring only the same number and arrangement of air-ducts, may be effected simply by the aid of heat.

General Morin indorses the following table, by some considered excessive, of the proper hourly supply of air required for each person in various situations: —

	CUBIC FEET.
Schools, each child, per hour	400 to 500.
Schools, each adult, per hour	800 to 1,000.
Meeting halls, for each person, per hour	1,000 to 2,000.
Theaters, for each person, per hour	1,400 to 1,700.
Prisons, for each person, per hour	1,700
Workshops, ordinary trades, for each person, per hour	2,000
Workshops, unhealthy trades, for each person, per hour	3,500
Ordinary hospitals	2,000 to 2,400.
Hospitals for epidemic cases	5,000

The temperature in general should not exceed, for

Workshops	50° Fah.
Hospitals	61° to 64° Fah.
Schools	66° to 68° Fah.
Meeting-rooms	66° to 72° Fah.
Theaters	68° to 73° Fah.

The air may be maintained at a higher temperature in well-ventilated apartments than in those where it is not frequently renewed.

Ordinarily, the fires by which the building is heated are wholly or principally relied on to effect the required renewal of the air. Dr. Arnott's plan, 1838, consists in cutting an opening in the chimney above the grate or fireplace, and providing this opening with a valve which opens inwardly to the flue, so as to draw off the foul air from the upper part of the apartment while preventing the entrance of smoke.

The plan of the Marquis de Chabannes, employed at the Covent Garden Theater, 1819, consisted in using the large central chandelier as the principal ventilating-agent. This was surmounted by an inverted wrought-iron funnel which conducted the hot air into a wooden shaft surmounted by a cowl. Air-passages leading from various parts of the house conducted the foul air into this shaft. A furnace in one of the galleries, and another over the stage, were employed as auxiliaries.

Previous to November, 1870, the Senate Chamber in the Capitol at Washington was ventilated upon the plenum principle exclusively, no exhaust being employed. The fan used for forcing is 14 feet in diameter, moved by an engine of 16 horse-power, delivers 500 cubic feet of air per revolution, and is capable of being run at a speed of 80 revolutions per minute, which is the maximum required for summer ventilation. The upper doorways and the openings in the ceiling were relied on to discharge the vitiated air. The fresh air was introduced through openings at the lower part of the chamber. Owing to

Def. Ex.

R

See English patents:	Newton, 11,084	A. D 1846.
	Gordon, 10,163	" 1844.
Belgian patent:	Houyet and Gendebein	" 1844.
French patents:	Cabanes	May 29, 1845.
	Cabanes	May 26, 1846.

Fig. 6957 may be taken as an illustration. The collar is connected to the curb by the elastic annular diaphragm, and its lower edge is received in an annular groove in the top of the stone. The air passes down the central opening in the collar and the eye of the stone, passing between the stones and up through the vertical spout to the fan The meal has the usual exit.

Fig. 6957.

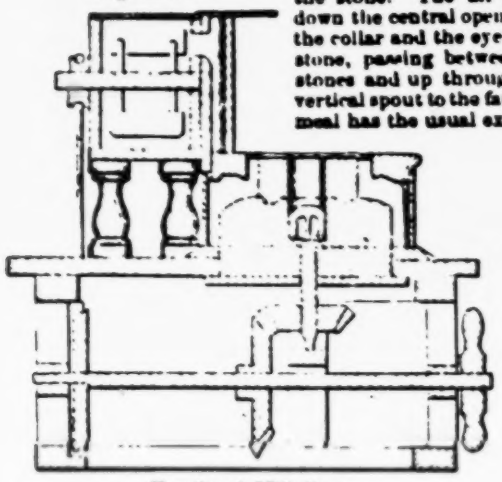

Ventilated Mill-Stone.

Ven'ti-lat'ing-stack. (*Mining.*) A high stack with a partition and air-furnaces, and connected with the ventilating-flue.

Ven'ti-lat'ing Wa'ter-wheel. The water-wheel bucket has an escape for the air toward the interior of the wheel, so as to allow the bucket to fill without confining the air, and to escape freely on reaching the position of discharge.

Fig 6958.

Ventilating Water-Wheel.

It appears to have been first introduced in Scotland, and to have been suggested by the violent eruption of water incident to the confining of the air in the bucket, in some cases forcing a spray to the hight of 6 or 8 feet. The arrows mark the course of the escaping air, from *a* to *b*.

Ven'ti-la'tor. An arrangement for supplying fresh and removing vitiated air from buildings, mines, or other places. This may be effected either by withdrawing the foul air and permitting the fresh air to flow in and supply its place (the *vacuum* process); or by forcing in fresh air (the *plenum* process), which drives the foul air before it to the exit. A combination of both processes is also used in certain cases.

In 1723, Dr. Desaguliers introduced a plan for ventilating the House of Commons by means of fires in upper apartments, which drew the air upward through openings at each angle of the House, whence it was conducted to the chimneys. This plan was not permitted to have a fair trial, and was succeeded by the centrifugal fan, invented by Desaguliers in 1734. One of these was erected over the ceiling of the House, and continued to do duty until 1817, being subsequently superseded by the arrangement contrived by the Marquis de Chabannes.

See "A Course of Experimental Philosophy," by J. F. Desaguliers, LL. D., F. R. S., Chaplain to his Grace the Duke of Chandos London, 1734.

About 1741, or shortly after the invention of the fan-blower by Desaguliers, the Rev. Dr. Hales contrived a ventilator which he endeavored to introduce into the British navy. It worked on the bellows principle, and was composed of two oblong boxes, each of which had a valve moved up and down by rods attached to a lever working on a central pin. Air was drawn into the machine through inwardly opening valves, and expelled by valves opening outwardly. It required the labor of two by the, was to receive its sole supply of air through these tubes.

Fig. 6959.

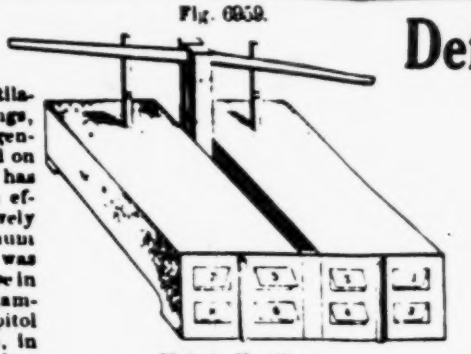

Hales's Ventilator.

1. The ventilation of buildings, though more generally conducted on the exhaust, has sometimes been effected exclusively on the plenum principle, as was formerly the case in the Senate Chamber of the Capitol at Washington, in which a combination of both methods is now adopted. General Morin, Director of the Imperial Conservatory of Arts and Trades under the late French Empire, an authority in matters of this kind, gives a decided preference to the vacuum method, for the reasons that the vitiated air is more certainly withdrawn than it can be when expelled by forcing, and on account of the machinery necessarily employed, requiring skilled labor to attend it, which is indispensable in the latter method; while the former, requiring only the same number and arrangement of air-ducts, may be effected simply by the aid of heat.

General Morin indorses the following table, by some considered excessive, of the proper hourly supply of air required for *each person in various situations*: —

	CUBIC FEET.
Schools, each child, per hour	400 to 500.
Schools, each adult, per hour	800 to 1,000.
Meeting halls, for each person, per hour	1,000 to 2,000.
Theaters, for each person, per hour	1,400 to 1,700.
Prisons, for each person, per hour	1,700
Workshops, ordinary trades, for each person, per hour	2,000
Workshops, unhealthy trades, for each person, per hour	3,500
Ordinary hospitals	2,000 to 2,400.
Hospitals for epidemic cases	5,000

The temperature in general should not exceed, for

Workshops	50° Fah.
Hospitals	61° to 64° Fah.
Schools	66° to 68° Fah.
Meeting-rooms	60° to 72° Fah.
Theaters	68° to 73° Fah.

The air may be maintained at a higher temperature in well-ventilated apartments than in those where it is not frequently renewed.

Ordinarily, the fires by which the building is heated are wholly or principally relied on to effect the required renewal of the air. Dr. Arnott's plan, 1838, consists in cutting an opening in the chimney above the grate or fireplace, and providing this opening with a valve which opens inwardly to the flue, so as to draw off the foul air from the upper part of the apartment while preventing the entrance of smoke.

The plan of the Marquis de Chabannes, employed at the Covent Garden Theater, 1819, consisted in using the large central chandelier as the principal ventilating-agent. This was surmounted by an inverted wrought-iron funnel which conducted the hot air into a wooden shaft surmounted by a cowl. Air-passages leading from various parts of the house conducted the foul air into this shaft. A furnace in one of the galleries, and another over the stage, were employed as auxiliaries.

Previous to November, 1870, the Senate Chamber in the Capitol at Washington was ventilated upon the plenum principle exclusively, no exhaust being employed. The fan used for forcing is 14 feet in diameter, moved by an engine of 16 horse-power, delivers 500 cubic feet of air per revolution, and is capable of being run at a speed of 80 revolutions per minute, which is the maximum required for summer ventilation. The upper doorways and the openings in the ceiling were relied on to discharge the vitiated air. The fresh air was introduced through openings at the lower part of the chamber. Owing to defects and contractions in the main induction channel and the distribution passages, however, the requisite quantity of air could not be supplied without causing a strong current on the floor. The speed of the fan had accordingly to be reduced so as to give only about ½ the quantity of air required. To remedy this defect, two large exhaust-fans driven by a 25 horse-power engine were erected; these draw the air through perforations in the ceiling into the illuminating loft above, thence downward through two descending shafts having a sectional area of 36 square feet into the exhaust-chamber, whence it is discharged through a single upcast shaft having a sectional area equal to

that of the other two combined. A second air-shaft was constructed, leading from the chamber in which the air is either heated or cooled, according to the season, to an air space under the seats of the galleries, into which it is distributed through numerous perforations. The temperature of the air thus introduced may be regulated independently of that supplied to the lower part of the chamber. The air, which was formerly drawn through an opening at the side of the Senate wing, where it was liable to be contaminated by smoke and gas from the neighboring flues, now passes through a tunnel 250 feet long, the mouth of which is located in a position free from these contaminating influences. By these means, 30,000 cubic feet of pure and well-tempered air can be supplied per minute, being 25 cubic feet for each of 1,200 persons.

Fig. 6960.

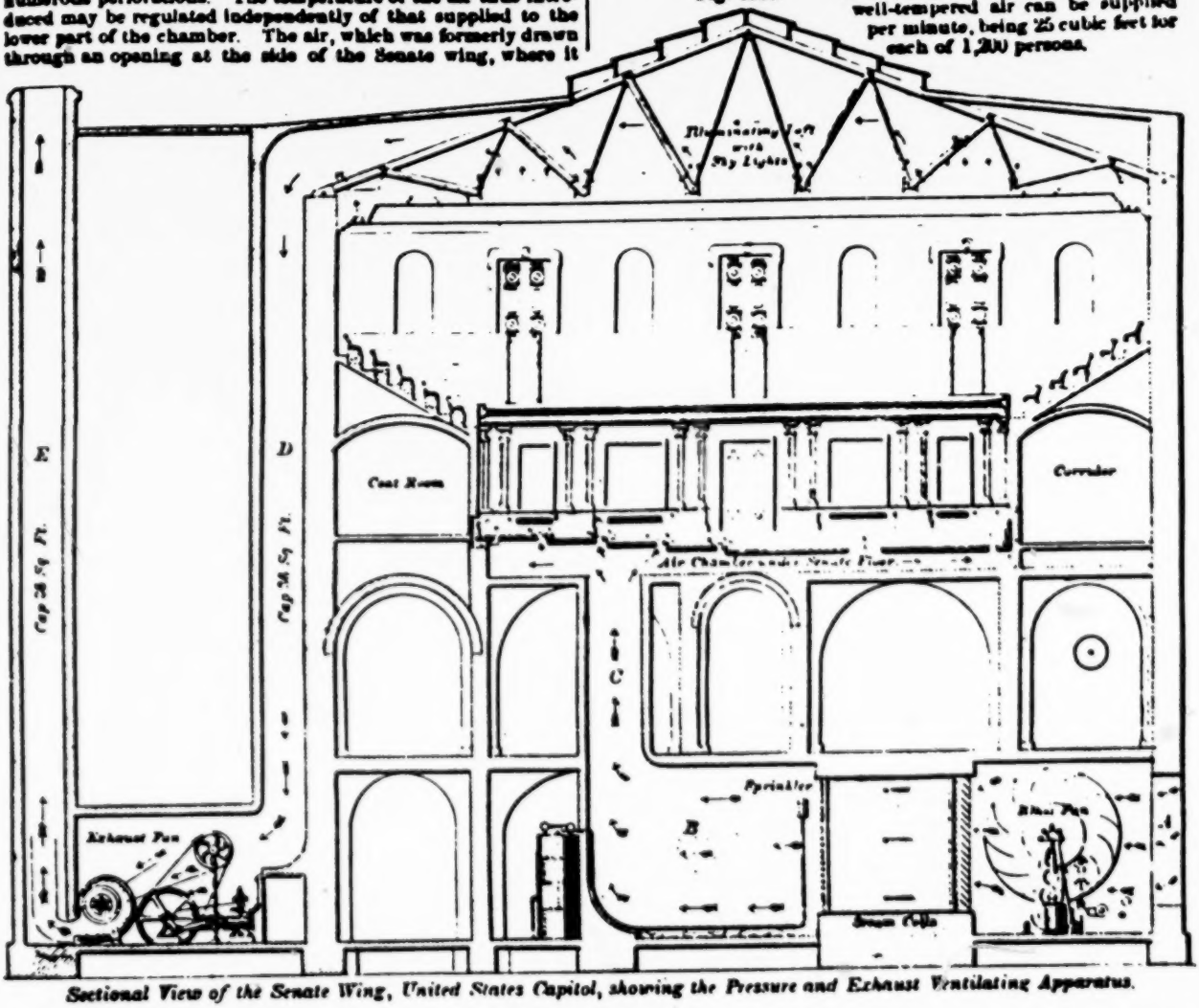

Sectional View of the Senate Wing, United States Capitol, showing the Pressure and Exhaust Ventilating Apparatus.

Fig. 6960 is a transverse section of the Senate wing, United States Capitol, illustrating the mode of warming and ventilating the Senate Chamber.

Fresh air is drawn in through an opening *A* in the basement wall by means of two powerful steam-driven blast-fans, which force it through a series of steam-coils into a chamber *B*, where it is charged with aqueous vapor by a sprinkler. It thence ascends through an upcast *C* into an air-chamber beneath the Senate floor, and is admitted into the apartment through registers in the floor and at the sides. Rising to the upper part of the hall, it passes through apertures between the skylights into the illuminating loft, whence it is drawn downward through a descending shaft *D*, having a sectional area of 36 square feet, by steam-driven exhaust-fans, and finally discharged into the open air through an ascending shaft *E* of equal capacity.

Fig. 6961.

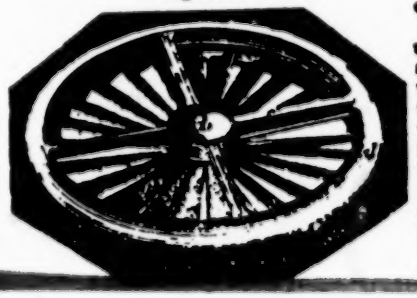

The *ventilator for windows* consists of a wheel with spiral vanes, which is rotated by the outward passage of air from the room. It is usually set in a pane of glass, or occupies the site of a pane

Fig. 6961 is a rotary ventilator for

b b' attached to the arms *c c'* of the case *d*. A hole of sufficient size is cut in a window-pane, the case inserted and held by the flanges *e e'* and tongues *f f'*, which are turned up for the purpose.

Fig. 6962.

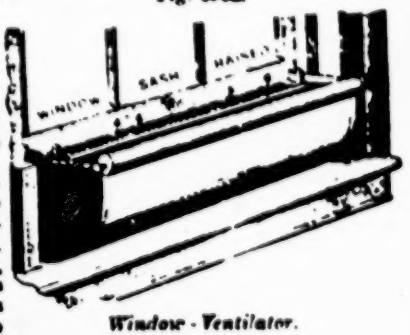

Window-Ventilator.

Or a curved chute placed at the opening formed by a raised sash to direct the air upward into a room.

Or a louver arrangement in a pane of glass, or occupying the place of one.

The ventilator, Fig. 6963, consists of a frame which is held between the lower bar of the sash and the sill of the window-frame, and has two elbowed pipes, whose inner ends are vertical, so as to direct the cool air from out doors upwardly into the apartment. The pipes are provided with valves for regulating the quantity of air admitted, or shutting it off altogether.

Fig. 6963

lower part of the chamber. The air, which was formerly drawn through an opening at the side of the Senate wing, where it

each of 1,200 persons.

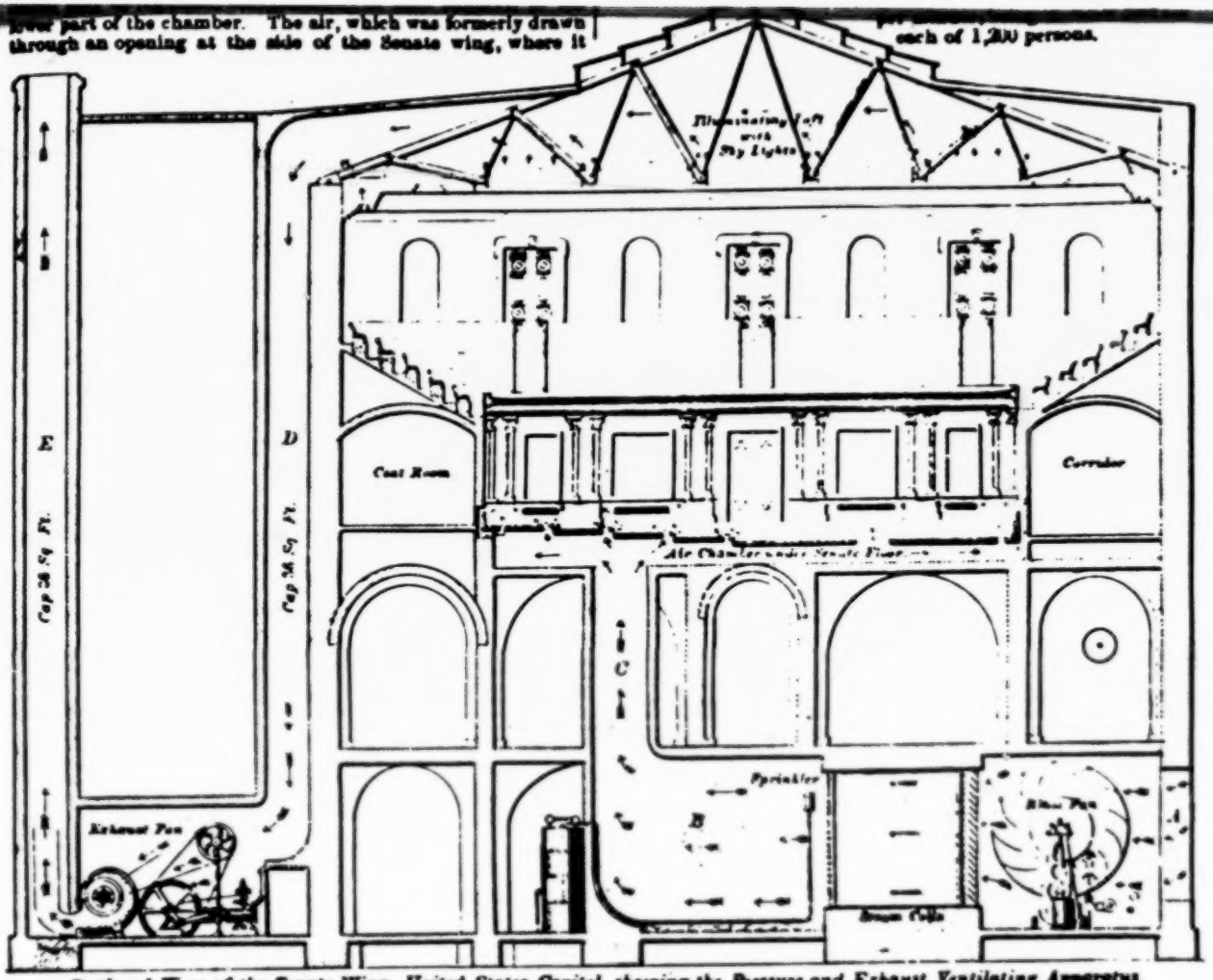

Sectional View of the Senate Wing, United States Capitol, showing the Pressure and Exhaust Ventilating Apparatus.

Fig. 6960 is a transverse section of the Senate wing, United States Capitol, illustrating the mode of warming and ventilating the Senate Chamber.

Fresh air is drawn in through an opening *A* in the basement wall by means of two powerful steam-driven blast-fans, which force it through a series of steam-coils into a chamber *B*, where it is charged with aqueous vapor by a sprinkler. It thence ascends through an upcast *C* into an air-chamber beneath the Senate floor, and is admitted into the apartment through registers in the floor and at the sides. Rising to the upper part of the hall, it passes through apertures between the skylights into the illuminating loft, whence it is drawn downward through a descending shaft *D*, having a sectional area of 36 square feet, by steam-driven exhaust-fans, and finally discharged into the open air through an ascending shaft *E* of equal capacity.

Fig. 6961.

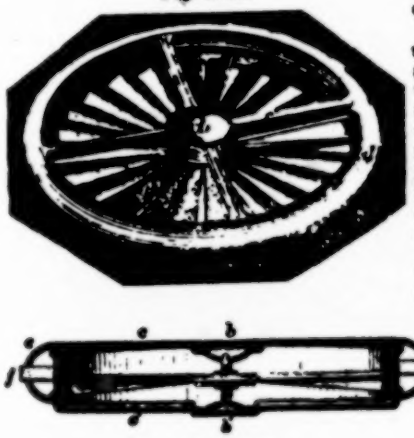

Ventilator.

The *ventilator for windows* consists of a wheel with spiral vanes, which is rotated by the outward passage of air from the room. It is usually set in a pane of glass, or occupies the site of a pane.

Fig. 6961 is a rotary ventilator for apartments. The wheel *a*, which has a number of radial vanes, is stamped out of sheet-metal, and is journaled in bearings upon disks *b b'* attached to the arms *c c'* of the case *d*. A hole of sufficient size is cut in a window-pane, the case inserted and held by the flanges *e e'* and tongues *f f'*, which are turned up for the purpose.

Fig. 6962.

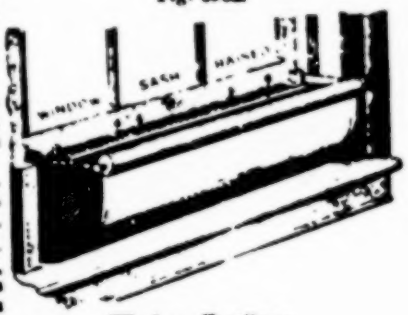

Window-Ventilator.

Or a curved chute placed at the opening formed by a raised sash to direct the air upward into a room.

Or a louver arrangement in a pane of glass, or occupying the place of one.

The ventilator, Fig. 6963, consists of a frame which is held between the lower bar of the sash and the sill of the window-frame, and has two elbowed pipes, whose inner ends are vertical, so as to direct the cool air from out doors upwardly into the apartment. The pipes are provided with valves for regulating the quantity of air admitted, or shutting it off altogether.

Fig. 6963.

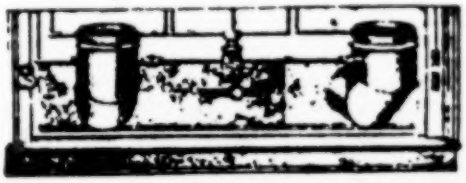

Ventilator.

Defendant's Exhibit S

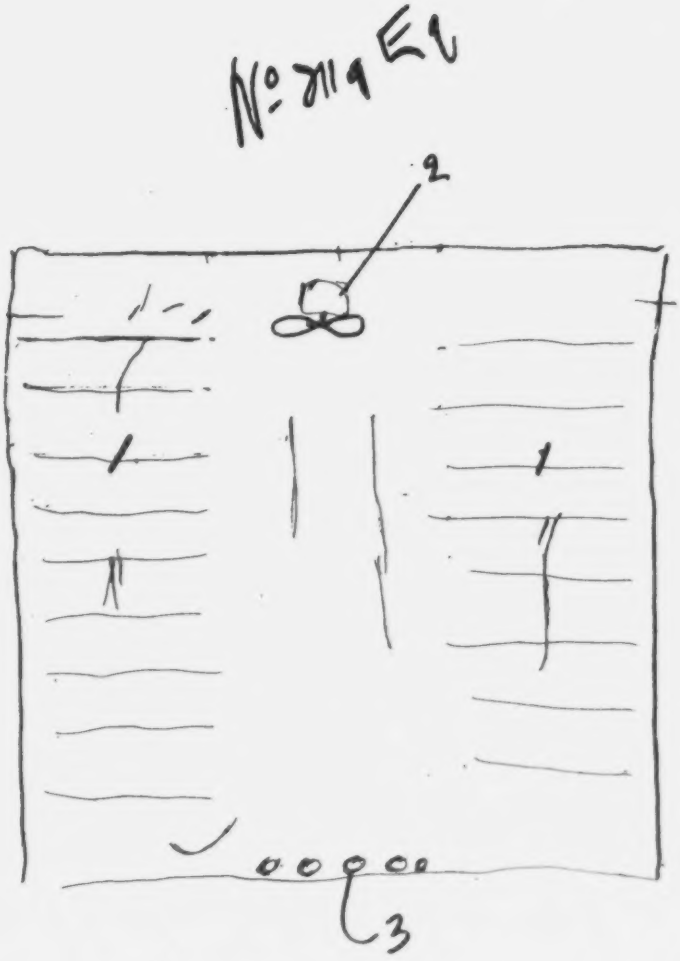

946 (Defendants' Exhibit T, Letters Patent No. 535,175 to C. W. Schwartz, Jr., March 5, 1895.)

(No Model.) 6 Sheets—Sheet 1.

C. W. SCHWARTZ, Jr.

METHOD OF AND APPARATUS FOR ORDERING TOBACCO.

No. 535,175. Patented Mar. 5, 1895.

Fig: 1

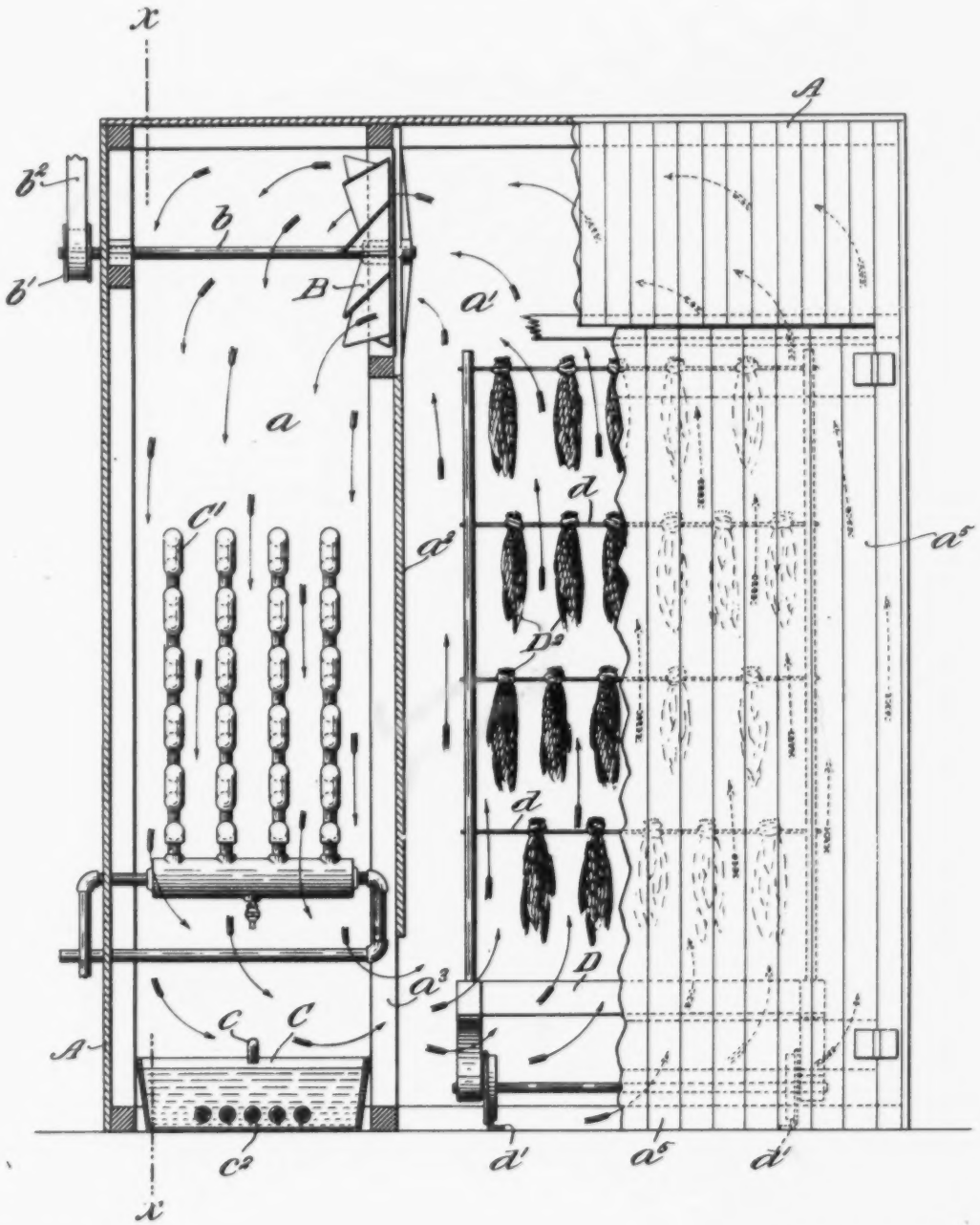

Witnesses:
Thomas M. Smith,
Richard E. Harwell.

Inventor:
Charles W. Schwartz Jr.,
By J. Walter Douglas.
Attorney.

820

(No Model.) 6 Sheets—Sheet 2.

C. W. SCHWARTZ, Jr.

METHOD OF AND APPARATUS FOR ORDERING TOBACCO.

No. 535,175. Patented Mar. 5, 1895.

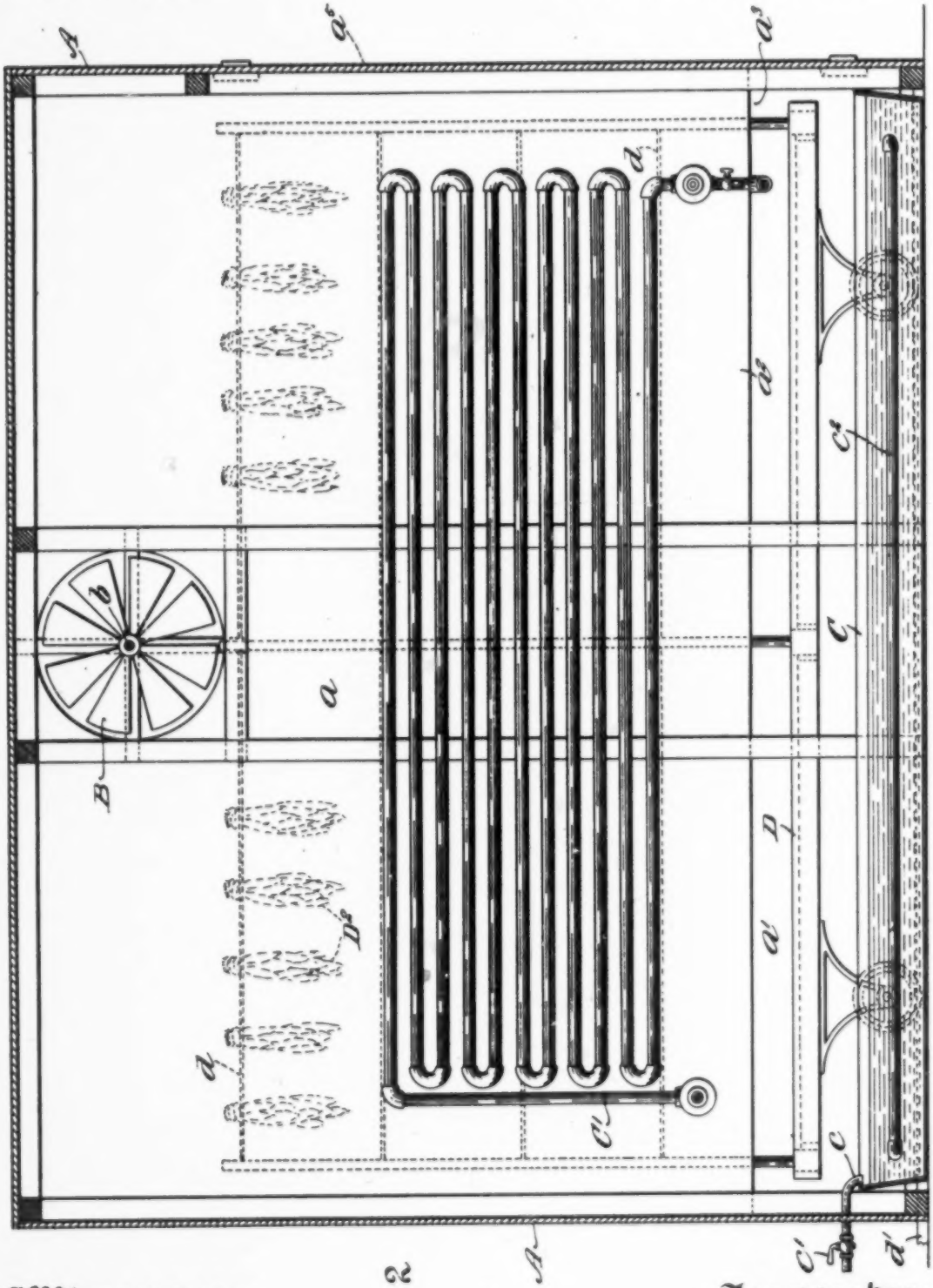

Fig. 2.

Witnesses:
Thomas M. Smith,
Richard C. Maxwell.

Inventor:
Charles W. Schwartz Jr.,
By J. Walter Douglass.
Attorney.

822

(No Model.) 6 Sheets—Sheet 3.

C. W. SCHWARTZ, Jr.

METHOD OF AND APPARATUS FOR ORDERING TOBACCO.

No. 535,175. Patented Mar. 5, 1895.

Fig. 3

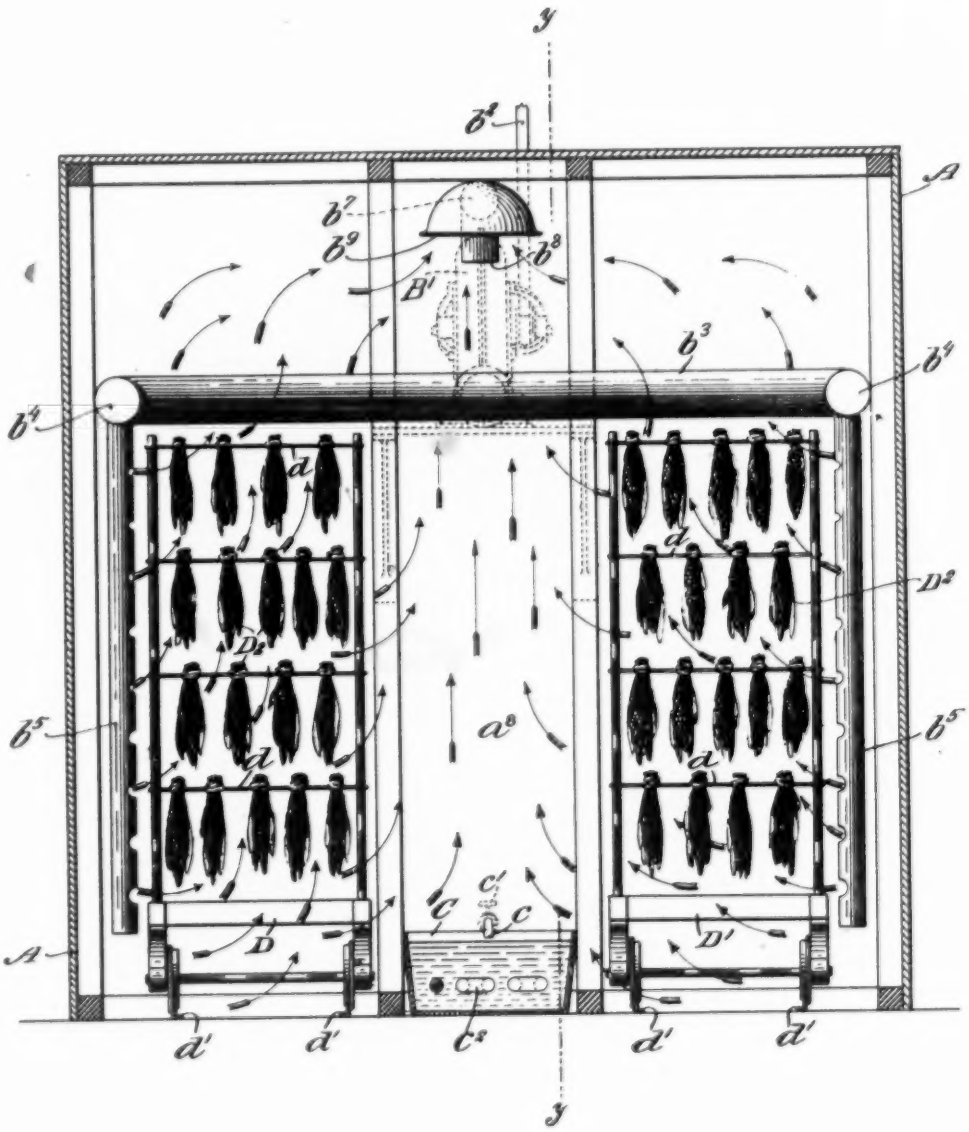

Witnesses:
Thomas M. Smith.
Richard C. Maxwell.

Inventor.
Charles W. Schwartz Jr.
By J. Walter Douglass.
Attorney.

824 (No Model.) 6 Sheets—Sheet 4.

C. W. SCHWARTZ, Jr.

METHOD OF AND APPARATUS FOR ORDERING TOBACCO.

No. 535,175. Patented Mar. 5, 1895.

Fig. 6.

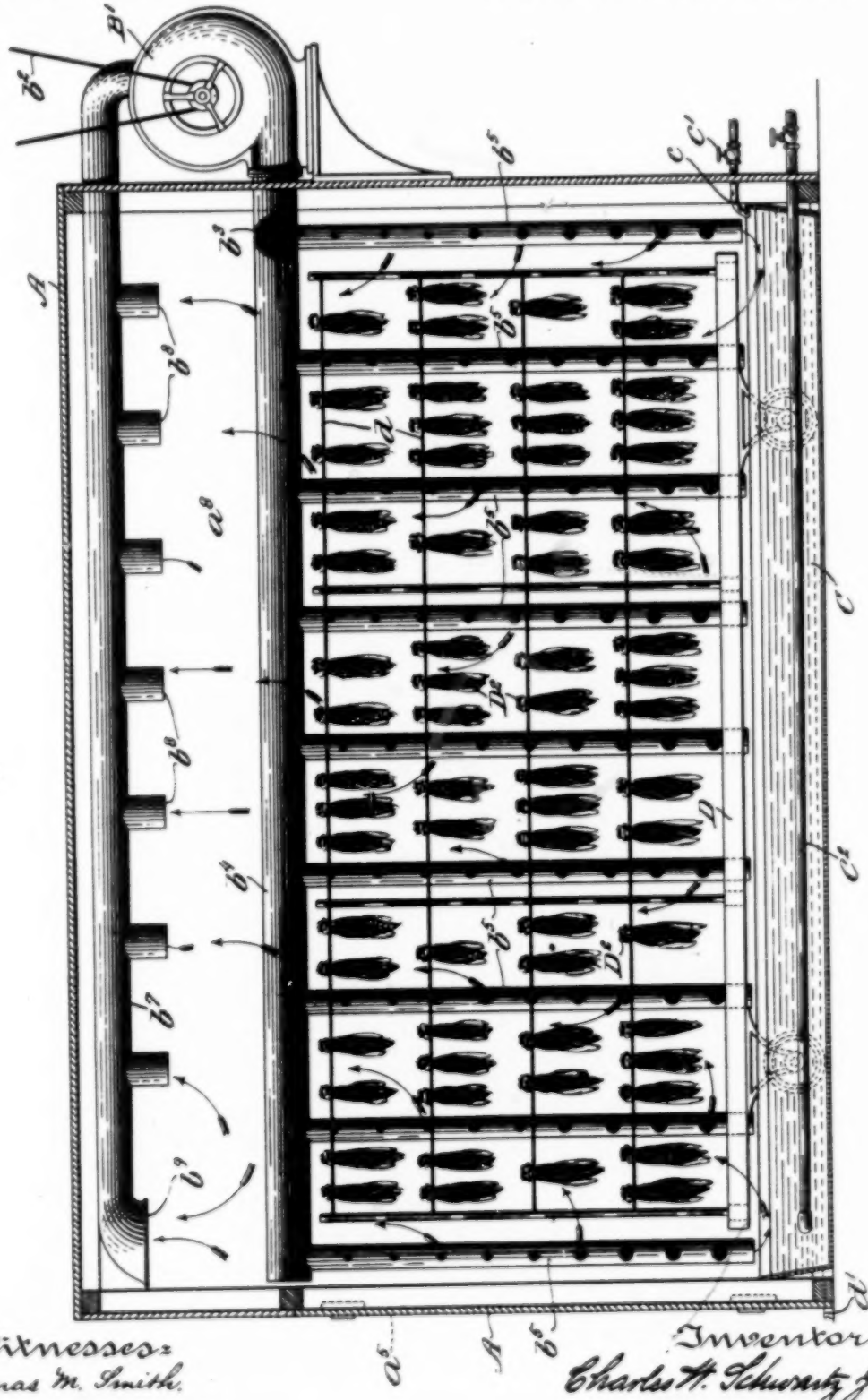

Witnesses:
Thomas M. Smith.
Richard C. Maxwell.

Inventor.
Charles W. Schwartz Jr.,
By J. Walter Douglass
Attorney.

826

(No Model.) 6 Sheets—Sheet 5.

C. W. SCHWARTZ, Jr.

METHOD OF AND APPARATUS FOR ORDERING TOBACCO.

No. 535,175. Patented Mar. 5, 1895.

Fig. 5

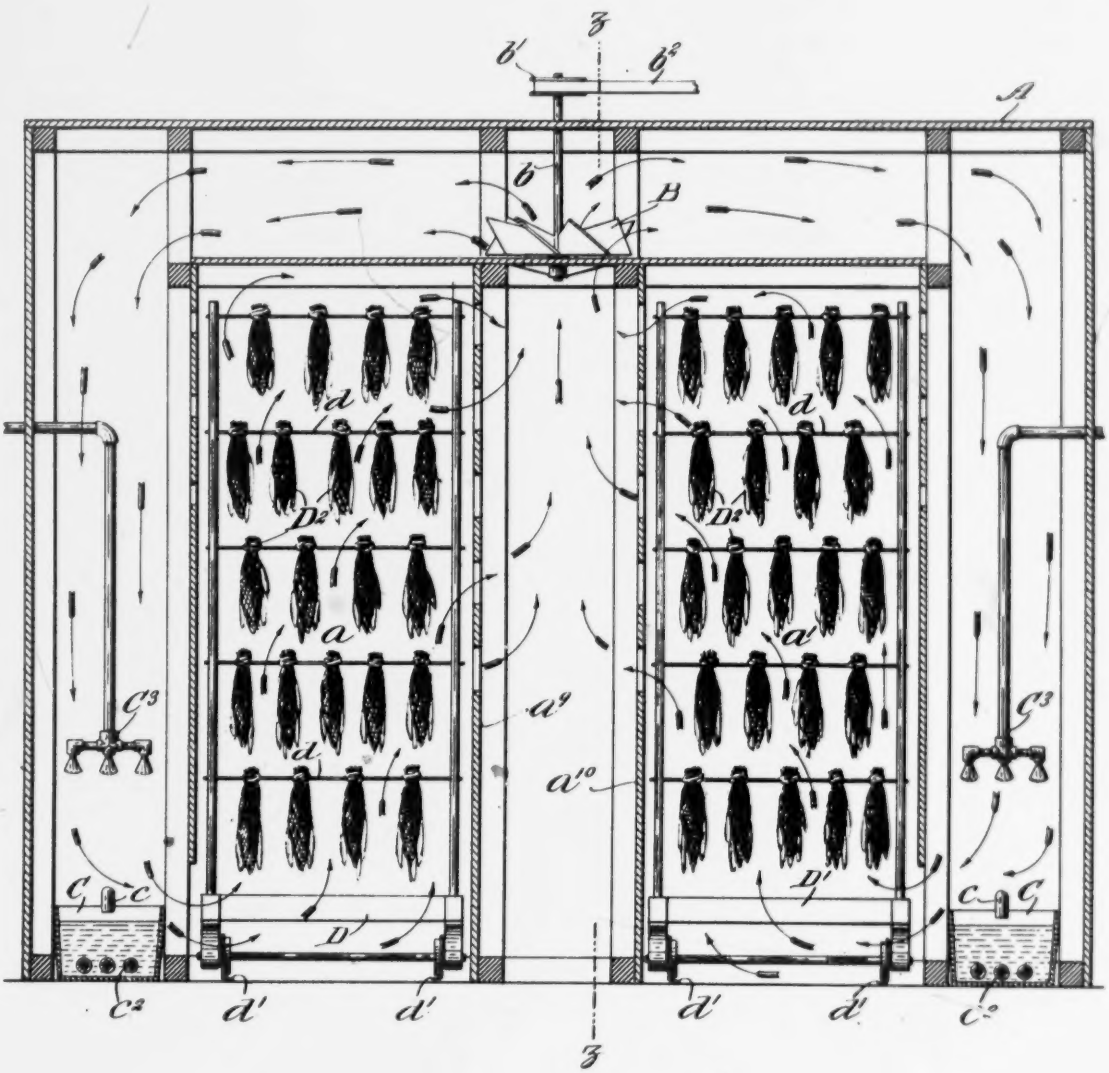

Witnesses:
Thomas M. Smith,
Richard C. Maxwell.

Inventor.
Charles W. Schwartz Jr.
By J. Walter Douglass
Attorney.

828

(No Model.) 6 Sheets—Sheet 6.

C. W. SCHWARTZ, Jr.

METHOD OF AND APPARATUS FOR ORDERING TOBACCO.

No. 535,175. Patented Mar. 5, 1895.

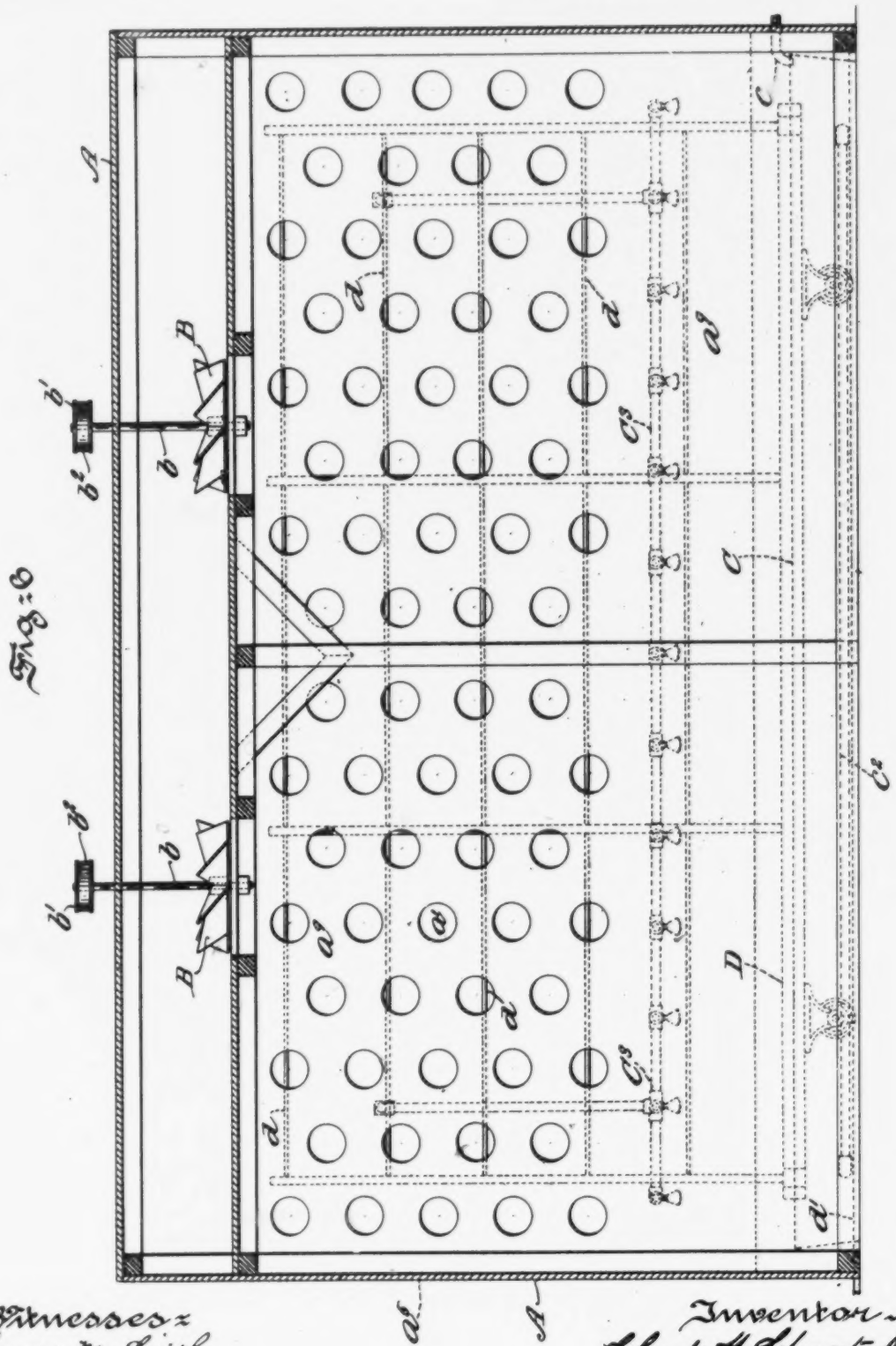

Witnesses:
Thomas M. Smith,
Richard C. Maxwell.

Inventor:
Charles W. Schwartz, Jr.,
By J. Walter Douglass.
Attorney.

UNITED STATES PATENT

CHARLES W. SCHWARTZ, JR., OF PHILADELPHIA, PENNSYL
TO THE PHILADELPHIA TEXTILE MACHINERY COMPANY,

METHOD OF AND APPARATUS FOR ORDERING

SPECIFICATION forming part of Letters Patent No. 535,175, dated

Application filed November 6, 1894. Serial No. 528,041. (No model.)

To all whom it may concern:

Be it known that I, CHARLES W. SCHWARTZ, Jr., a citizen of the United States, residing at Germantown, in the county of Philadelphia and State of Pennsylvania, have invented certain new and useful Improvements in Methods of and Apparatus for Ordering Tobacco, of which the following is a specification.

My invention relates to a method of and apparatus for ordering tobacco.

The principal objects of my invention are, first, to provide a simple and effective method of hastening the ordering of tobacco so that any tendency to scorching or scalding of the same is entirely prevented and the tobacco rendered sweet in taste and subsequent handling permitted with perfect safety and without fear of crushing the leaves thereof; second, to provide an efficient method of ordering tobacco by circulation and recirculation, which consists in presenting air of one temperature to water of a different temperature in a chamber to cause the latter to be combined so as to produce a humid atmosphere which is forced into the presence of the tobacco absorbing the humidity of the air and again conveying the same into the presence of water to revivify the same and presenting to the tobacco to effect the complete ordering thereof, and, third, to provide suitable apparatus for the conduct of the method of ordering tobacco of my invention.

My invention stated in general terms comprises a method of ordering tobacco by circulation and recirculation which consists in presenting air of one temperature in the path of water of a different temperature to produce a humid atmosphere and presenting to suspended tobacco in such manner as to cause an absorption of the humidity of the air thereby and conveying the air deprived of its humidity to water to supply the same with humidity and presenting again to the tobacco to effect complete or thorough ordering of the same.

My invention further consists in the method of ordering tobacco, of forcing air of one temperature into the presence of water of higher temperature to produce a humid atmosphere and presenting to tobacco, which absorbs humidity therefrom, then
to revivify the same an
ing again into the pres
effect the complete ord

My invention further
of ordering tobacco b
circulation, which cons
brought to a low tempe
ence of water maintain
ture to produce a humi
senting continuously to
ively to water to permi
one instance by the tob
of the air and in the o
the air with humidity s
to the tobacco to effect t
thereof.

My invention further
apparatus for the cond
ordering tobacco of my i
and arranged in subst
hereinafter described a

The nature and gene
vention will be more f
the following descriptio
with the accompanyin
part hereof, and in whi

Figure 1, is a cen
through one form of a
features of my invention
tice has been found wel
duct of the method of o
invention. Fig. 2, is a
through the apparatus o
1. Fig. 3, is a vertical ce
a modified form of app
1, for carrying into effe
invention. Fig. 4, is a
section on the line y—y
a vertical central sectio
ther modified form of a
tion; and Fig. 6, is a ver
tion on the line z—z, of

Referring to the dra
provided with internal
partially separated fro
tition a^3, with referenc
the drawings. In the
per portion thereof is
into which is mounted

6 Sheets—Sheet 6.

C. W. SCHWARTZ, Jr.

OD OF AND APPARATUS FOR ORDERING TOBACCO.

6.

Patented Mar. 5, 1895.

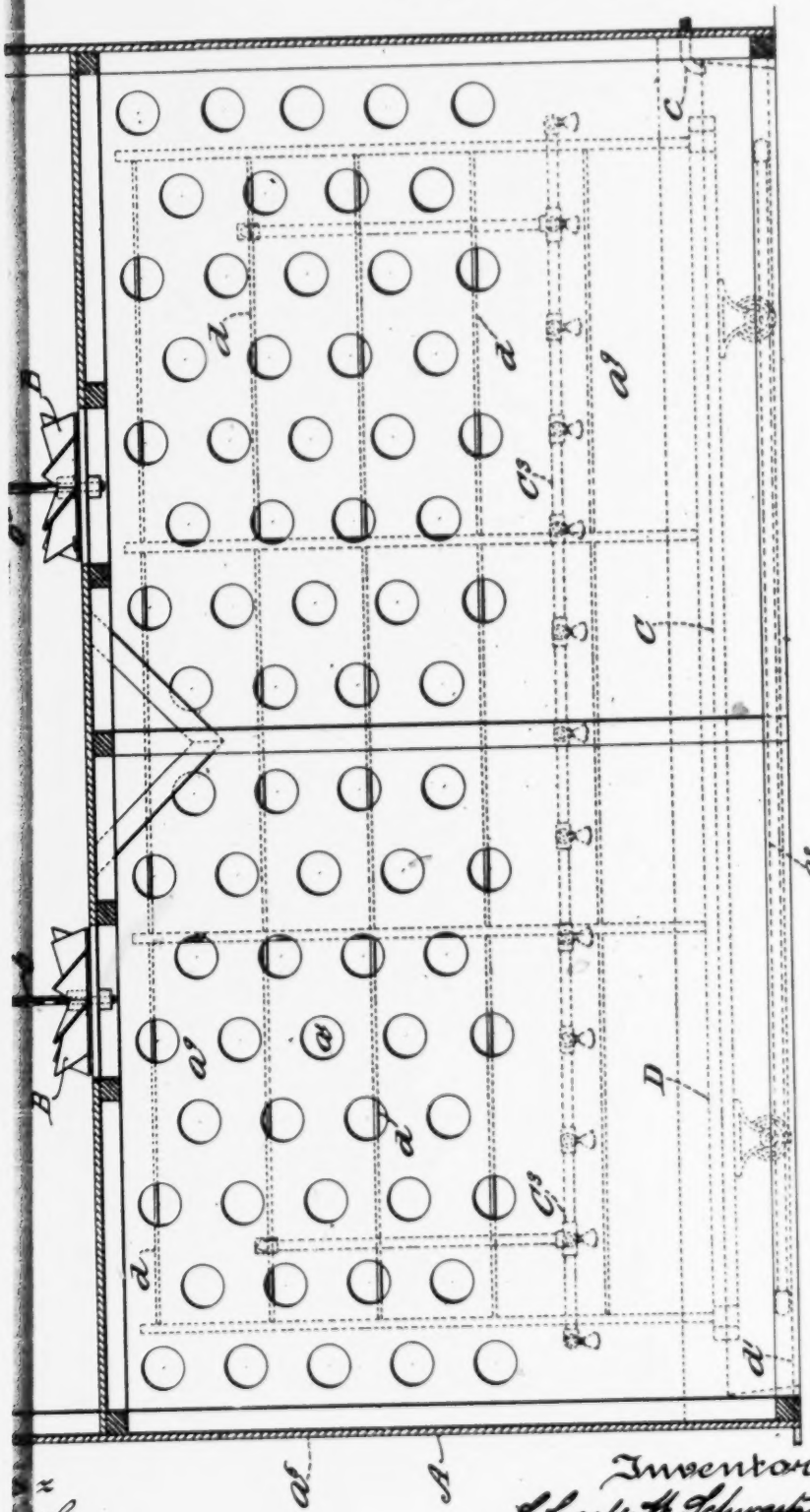

Inventor-
Charles W. Schwartz Jr.
By J. Walter Douglass.
Attorney.

UNITED STATES PATENT OFFICE.

CHARLES W. SCHWARTZ, JR., OF PHILADELPHIA, PENNSYLVANIA, ASSIGNOR TO THE PHILADELPHIA TEXTILE MACHINERY COMPANY, OF SAME PLACE.

METHOD OF AND APPARATUS FOR ORDERING TOBACCO.

SPECIFICATION forming part of Letters Patent No. 535,175, dated March 5, 1895.

Application filed November 6, 1894. Serial No. 528,041. (No model.)

To all whom it may concern:

Be it known that I, CHARLES W. SCHWARTZ, Jr., a citizen of the United States, residing at Germantown, in the county of Philadelphia and State of Pennsylvania, have invented certain new and useful Improvements in Methods of and Apparatus for Ordering Tobacco, of which the following is a specification.

My invention relates to a method of and apparatus for ordering tobacco.

The principal objects of my invention are, first, to provide a simple and effective method of hastening the ordering of tobacco so that any tendency to scorching or scalding of the same is entirely prevented and the tobacco rendered sweet in taste and subsequent handling permitted with perfect safety and without fear of crushing the leaves thereof; second, to provide an efficient method of ordering tobacco by circulation and recirculation, which consists in presenting air of one temperature to water of a different temperature in a chamber to cause the latter to be combined so as to produce a humid atmosphere which is forced into the presence of the tobacco absorbing the humidity of the air and again conveying the same into the presence of water to revivify the same and presenting to the tobacco to effect the complete ordering thereof, and, third, to provide suitable apparatus for the conduct of the method of ordering tobacco of my invention.

My invention stated in general terms comprises a method of ordering tobacco by circulation and recirculation which consists in presenting air of one temperature in the path of water of a different temperature to produce a humid atmosphere and presenting to suspended tobacco in such manner as to cause an absorption of the humidity of the air thereby and conveying the air deprived of its humidity to water to supply the same with humidity and presenting again to the tobacco to effect complete or thorough ordering of the same.

My invention further consists in the method of ordering tobacco, of forcing air of one temperature into the presence of water of higher temperature to produce a humid atmosphere and presenting to tobacco, which absorbs humidity therefrom, then presenting to water to revivify the same and under pressure forcing again into the presence of the tobacco to effect the complete ordering thereof.

My invention further consists of the method of ordering tobacco by circulation and recirculation, which consists in subjecting air brought to a low temperature into the presence of water maintained at a high temperature to produce a humid atmosphere and presenting continuously to tobacco and successively to water to permit of absorption in the one instance by the tobacco of the humidity of the air and in the other of the supply of the air with humidity so as to again present to the tobacco to effect the complete ordering thereof.

My invention further consists of suitable apparatus for the conduct of the method of ordering tobacco of my invention, constructed and arranged in substantially the manner hereinafter described and claimed.

The nature and general features of my invention will be more fully understood from the following description, taken in connection with the accompanying drawings, forming part hereof, and in which—

Figure 1, is a central vertical section through one form of apparatus embodying features of my invention, and such as in practice has been found well adapted for the conduct of the method of ordering tobacco of my invention. Fig. 2, is a longitudinal section through the apparatus on the line x—x, of Fig. 1. Fig. 3, is a vertical central section through a modified form of apparatus to that of Fig. 1, for carrying into effect the method of my invention. Fig. 4, is a vertical longitudinal section on the line y—y, of Fig. 3. Fig. 5, is a vertical central section through a still further modified form of apparatus of my invention; and Fig. 6, is a vertical longitudinal section on the line z—z, of Fig. 5.

Referring to the drawings A, is a housing provided with internal chambers a and a', partially separated from each other by a partition a^3, with reference to Figs. 1 and 2, of the drawings. In the partition a^3, the upper portion thereof is provided an opening, into which is mounted a propeller fan or agi-

tating device B, mounted on a cross shaft b which extends through the housing A, and carries a pulley b', and a belt b^2, for effecting the rotation of the said fan or agitating device B.

a^3, is an opening in the lower portion of said partition a^2, for a purpose to be presently explained.

In the bottom of the chamber a, is mounted an oblong trough or tank C, adapted to contain water introduced into the same by means of a spigot c, having a stop-cock c'. In the bottom of the trough or tank C, is provided a coiled pipe c^2, for heating the water therein in such manner as that the same will be maintained at a higher temperature than the air caused to circulate around or about the water of this trough C. Above the tank or trough C, is provided a cooling or refrigerating coiled or other appliance C', for reducing the temperature of the air caused to circulate in the chambers of the housing A, and so that it may be maintained at such a temperature as to intimately blend or combine with the water of a higher temperature traveling in the path thereof and thereby producing the required humid atmosphere for presenting by circulation and recirculation to the tobacco to be absorbed by it in whole or in part to dampen and order the same.

D, is a truck adapted to be introduced into the chamber a', and provided with cross rods d, for supporting bunches of tobacco D^3, therefrom.

d', are rails over which the truck is moved into and out of the housing A, through a door a^5, provided in one of the side or end walls of the same.

In the operation of the apparatus of Figs. 1 and 2, the air is forced by means of the propeller or agitating device B, into the chamber a, and the temperature of the water in the chamber a, being raised by means of the steam coil c^2, so as to cause the air therein freed from the agitating influence of said device D, and in a more or less calm state and brought to and maintained at a lower temperature than the water by the cooling or refrigerating appliance C', in the chamber a, and until it is caused to associate with the water to produce a humid atmosphere in the chamber a, of the housing A, and which after the starting up of the apparatus is continuously conducted through the chambers a and a', into the presence of the tobacco D^3, in the latter chamber a', and the humidity of the air is absorbed by the tobacco suspended from the truck D, therein and under the influence of the propeller fan or agitating device B, the air having the humidity dissociated therefrom is carried back again into the chamber a, where it becomes again a humid atmosphere and is conveyed into the presence of the tobacco to effect first the moistening or dampening of the surface or body thereof and by continuous circulation and recirculation of the air supplied with moisture, complete ordering of the tobacco.

With reference to Figs. 3 and 4, the apparatus is substantially the same as that of Figs. 1 and 2, with the following exceptions:—The blowing or agitating device B', in the present instance, is provided with a transverse conduit b^3, extending substantially the width of the housing A, and connected therewith are longitudinal pipes or conduits b^4, on each side provided with depending perforated pipes b^5, as clearly illustrated in Fig. 4. Within the housing A, are mounted two trucks D and D', on rails d', secured to the floor thereof, and with a water tank or trough C, located in a central chamber a^2, and having a heating coil extending through the tank or trough for not only heating, but also maintaining the water therein at a different temperature from that of air caused to circulate through the internal chambers of the housing A, and becoming associated with the water to produce a humid atmosphere, for being presented to the tobacco in bunch or other form suspended from the trucks D and D', as fully illustrated in Fig. 3.

b^7, is a pipe or conduit located beneath the roof of the housing on the inside thereof and connected with the rear of the blowing device B'. This pipe or conduit b^7, is provided with a series of depending inlets b^8, and at the left hand end thereof is provided a large inlet or throat b^9, for sucking air into the same deprived of its moisture or humidity through its absorption by the tobacco and which air is also drawn through the series of inlets b^8, of said conduit b^7, thereby and conducted rearwardly into the blowing device B', and by which latter means the air is again conveyed through the transverse conduit b^3, and then longitudinally and downwardly through the perforated depending pipes or conduits b^4 and b^5, in such manner as that the presence of the air of one temperature from said perforated pipes b^5, on both sides of the interior of the housing, then in a more or less calm state or condition, will be brought into the path of water in the tank or vat C, of a different temperature, thereby receiving moisture therefrom and thus converting the air into a humid atmosphere which is presented by circulation and recirculation to the tobacco suspended from the trucks D and D', to effect first moistening of the body or surface of the tobacco and then complete ordering of the same.

It may be here remarked that the cooling or refrigerating appliance may be in the nature of a sprayer or any other somewhat similar means to be further explained to reduce the temperature of air circulating in and about the interior of the housing below the temperature of the heated water of the tank or trough C.

With reference to Figs. 5 and 6, the apparatus therein differs from that hereinbefore described in the following particulars:—Instead of providing on the interior of the housing A, a series of depending perforated tubes

b^5, connected with pipes or conduits b^4, and with a main conduit b^3, in which air is conducted therethrough by means of a blowing device B', propeller fans B, as illustrated in Figs. 1 and 2, are employed in the top of the housing and the air is forced therefrom and thereby in different directions as indicated by the arrows in Fig. 5, and in a more or less calm state by this time, into the presence of water maintained at a different temperature from the air, so that the latter may effectually absorb the water and thus create a humid atmosphere for presenting to the tobacco supported from the trucks D and D', in the chambers a and a', which are separated from each other by means of partitions a^9 and a^{10}. These partitions are provided with staggered openings, as clearly illustrated in Fig. 5. The cooling or refrigerating appliance for reducing the temperature of circulating air in this instance is in the nature of a water sprayer or atomizer c^3, as fully illustrated in Figs. 5 and 6. In other respects the apparatus is the same as that hereinbefore fully explained and the devices associated with the apparatus operate in the same manner as they do with reference to Figs. 1 to 4, of the drawings.

It will be manifestly obvious to those skilled in the art to which my invention appertains that still further modifications as to details of construction of the apparatus and arrangement of the devices connected therewith may be made, without departing from the spirit and scope thereof; and hence I do not wish to be understood as limiting myself to the precise arrangements of all the parts of the apparatus as illustrated; but

Having thus described the nature and objects of my invention, what I claim as new, and desire to secure by Letters Patent, is—

1. The method of ordering tobacco, which consists in continuously presenting air of one temperature in a chamber to water of another temperature to produce a humid atmosphere, conveying the same into the presence of tobacco to effect dampening thereof, and causing successively the air deprived of its humidity to be revivified and again presented to the tobacco to effect ordering thereof, substantially as described.

2. The method of ordering tobacco, which consists in forcing air into the presence of water of a temperature differing from the air to become associated therewith by producing a humid atmosphere, conveying the same to tobacco which absorbs the humidity thereof, conducting the air deprived of its humidity to the water to revivify the same and then presenting the air recharged with moisture to the tobacco to effect ordering thereof, substantially as described.

3. The method of ordering tobacco, which consists in presenting under pressure air of a low temperature to water of a high temperature to create a humid atmosphere, conveying the same to toba
presence of water and
tobacco to effect or
tially as described.

4. The method of
consists in presenting
in temperature in the
cause association of
to produce a humid a
sented to tobacco, s
the air deprived of
sorption of the same
culating the same th
stantially as and for

5. The method of
consists in presenting
as to its temperature b
tation thereof to wate
ferent temperature an
with the other produ
phere, continuously p
successively revivifyi
its humidity through
tobacco and again p
stantially as and for t

6. An apparatus for
prising a housing prov
or trough having mea
ter, a cooling or refrig
a blowing or forcing
and recirculating air i
of said tank or troug
for the purposes descr

7. An apparatus for
prising a housing prov
nicating chambers, a
vice for circulating an
water tank or trough p
device, and means for
said housing, substan
purposes described.

8. An apparatus for
prising a housing provi
ed to contain water an
a different temperatur
therein, means for circ
ing the air through sai
for supporting tobacco
subjecting the same to
generated humid atm
stantially as and for th

9. An apparatus for
prising a housing havi
means for containing
chambers and a cooling
circulating and recircu
said housing in each in
being presented to the
supporting tobacco in
said housing, substan
purposes described.

10. An apparatus for c
prising a housing divid
municating chambers h
partitions thereof, a wat
heating means therein,

on a cross shaft b the housing A, and belt b^3, for effecting fan or agitating de-

lower portion of said e to be presently ex-

amber a, is mounted k C, adapted to con- to the same by means stop-cock c'. In the tank C, is provided ng the water therein e same will be main- erature than the air d or about the water e the tank or trough r refrigerating coiled r reducing the tem- ed to circulate in the A, and so that it may temperature as to in- ne with the water of raveling in the path ducing the required resenting by circula- the tobacco to be ab- r in part to dampen

to be introduced into ovided with cross rods es of tobacco D^3, there-

ch the truck is moved ing A, through a door he side or end walls of

e apparatus of Figs. 1 by means of the pro- ice B, into the cham- ure of the water in the by means of the steam air therein freed from of said device D, and in te and brought to and temperature than the refrigerating appliance nd until it is caused to er to produce a humid mber a, of the housing starting up of the ap- ly conducted through ', into the presence of latter chamber a', and air is absorbed by the m the truck D, therein ce of the propeller fan the air having the hu- erefrom is carried back er a, where it becomes phere and is conveyed he tobacco to effect first mpening of the surface by continuous circula- of the air supplied with ndering of the tobacco.

With reference to Figs. 3 and 4, the apparatus is substantially the same as that of Figs. 1 and 2, with the following exceptions:—The blowing or agitating device B', in the present instance, is provided with a transverse conduit b^3, extending substantially the width of the housing A, and connected therewith are longitudinal pipes or conduits b^4, on each side provided with depending perforated pipes b^5, as clearly illustrated in Fig. 4. Within the housing A, are mounted two trucks D and D', on rails d', secured to the floor thereof, and with a water tank or trough C, located in a central chamber a^2, and having a heating coil extending through the tank or trough for not only heating, but also maintaining the water therein at a different temperature from that of air caused to circulate through the internal chambers of the housing A, and becoming associated with the water to produce a humid atmosphere, for being presented to the tobacco in bunch or other form suspended from the trucks D and D', as fully illustrated in Fig. 3.

b^7, is a pipe or conduit located beneath the roof of the housing on the inside thereof and connected with the rear of the blowing device B'. This pipe or conduit b^7, is provided with a series of depending inlets b^8, and at the left hand end thereof is provided a large inlet or throat b^9, for sucking air into the same deprived of its moisture or humidity through its absorption by the tobacco and which air is also drawn through the series of inlets b^8, of said conduit b^7, thereby and conducted rearwardly into the blowing device B', and by which latter means the air is again conveyed through the transverse conduit b^3, and then longitudinally and downwardly through the perforated depending pipes or conduits b^4 and b^5, in such manner as that the presence of the air of one temperature from said perforated pipes b^5, on both sides of the interior of the housing, then in a more or less calm state or condition, will be brought into the path of water in the tank or vat C, of a different temperature, thereby receiving moisture therefrom and thus converting the air into a humid atmosphere which is presented by circulation and recirculation to the tobacco suspended from the trucks D and D', to effect first moistening of the body or surface of the tobacco and then complete ordering of the same.

It may be here remarked that the cooling or refrigerating appliance may be in the nature of a sprayer or any other somewhat similar means to be further explained to reduce the temperature of air circulating in and about the interior of the housing below the temperature of the heated water of the tank or trough C.

With reference to Figs. 5 and 6, the apparatus therein differs from that hereinbefore described in the following particulars:—Instead of providing on the interior of the housing A, a series of depending perforated tubes

b^2, connected with pipes or conduits b^4, and with a main conduit b^3, in which air is conducted therethrough by means of a blowing device B′, propeller fans B, as illustrated in Figs. 1 and 2, are employed in the top of the housing and the air is forced therefrom and thereby in different directions as indicated by the arrows in Fig. 5, and in a more or less calm state by this time, into the presence of water maintained at a different temperature from the air, so that the latter may effectually absorb the water and thus create a humid atmosphere for presenting to the tobacco supported from the trucks D and D′, in the chambers a and a', which are separated from each other by means of partitions a^9 and a^{10}. These partitions are provided with staggered openings, as clearly illustrated in Fig. 5. The cooling or refrigerating appliance for reducing the temperature of circulating air in this instance is in the nature of a water sprayer or atomizer c^3, as fully illustrated in Figs. 5 and 6. In other respects the apparatus is the same as that hereinbefore fully explained and the devices associated with the apparatus operate in the same manner as they do with reference to Figs. 1 to 4, of the drawings.

It will be manifestly obvious to those skilled in the art to which my invention appertains that still further modifications as to details of construction of the apparatus and arrangement of the devices connected therewith may be made, without departing from the spirit and scope thereof; and hence I do not wish to be understood as limiting myself to the precise arrangements of all the parts of the apparatus as illustrated; but

Having thus described the nature and objects of my invention, what I claim as new, and desire to secure by Letters Patent, is—

1. The method of ordering tobacco, which consists in continuously presenting air of one temperature in a chamber to water of another temperature to produce a humid atmosphere, conveying the same into the presence of tobacco to effect dampening thereof, and causing successively the air deprived of its humidity to be revivified and again presented to the tobacco to effect ordering thereof, substantially as described.

2. The method of ordering tobacco, which consists in forcing air into the presence of water of a temperature differing from the air to become associated therewith by producing a humid atmosphere, conveying the same to tobacco which absorbs the humidity thereof, conducting the air deprived of its humidity to the water to revivify the same and then presenting the air recharged with moisture to the tobacco to effect ordering thereof, substantially as described.

3. The method of ordering tobacco, which consists in presenting under pressure air of a low temperature to water of a high temperature to create a humid atmosphere, conveying the same to tobacco, reconveying into the presence of water and presenting again to the tobacco to effect ordering thereof, substantially as described.

4. The method of ordering tobacco, which consists in presenting air artificially lowered in temperature in the path of heated water to cause association of one with the other so as to produce a humid atmosphere which is presented to tobacco, successively revivifying the air deprived of its moisture by the absorption of the same by the tobacco and recirculating the same through the tobacco, substantially as and for the purposes described.

5. The method of ordering tobacco, which consists in presenting air artificially changed as to its temperature beyond the point of agitation thereof to water maintained at a different temperature and by association of one with the other producing a humid atmosphere, continuously presenting to tobacco and successively revivifying the same deprived of its humidity through its absorption by the tobacco and again presenting thereto, substantially as and for the purposes described.

6. An apparatus for ordering tobacco, comprising a housing provided with a water tank or trough having means for heating said water, a cooling or refrigerating appliance, and a blowing or forcing device for circulating and recirculating air in the path of the water of said tank or trough, substantially as and for the purposes described.

7. An apparatus for ordering tobacco, comprising a housing provided with two communicating chambers, a blowing or forcing device for circulating and recirculating air, a water tank or trough provided with a heating device, and means for supporting tobacco in said housing, substantially as and for the purposes described.

8. An apparatus for ordering tobacco, comprising a housing provided with means adapted to contain water and maintain the same at a different temperature from that of the air therein, means for circulating and recirculating the air through said housing, and means for supporting tobacco in said housing and subjecting the same to the influence of the generated humid atmosphere therein, substantially as and for the purposes described.

9. An apparatus for ordering tobacco, comprising a housing having internal chambers, means for containing water in one of said chambers and a cooling appliance, means for circulating and recirculating the air through said housing in each instance anterior to its being presented to the water, and means for supporting tobacco in the other chamber of said housing, substantially as and for the purposes described.

10. An apparatus for ordering tobacco, comprising a housing divided into internal communicating chambers having openings in the partitions thereof, a water trough or vats with heating means therein, a forcing or blowing

device for circulating and recirculating air within said housing, means for supporting tobacco in certain of said internal chambers, and means for cooling the air located in the other of said chambers, substantially as and for the purposes described.

In witness whereof I have hereunto set my signature in the presence of two subscribing witnesses.

CHARLES W. SCHWARTZ, JR.

Witnesses:
THOMAS M. SMITH,
RICHARD C. MAXWELL.

Incubator of E. H. SNOW, Sleepy Eye, Minn.

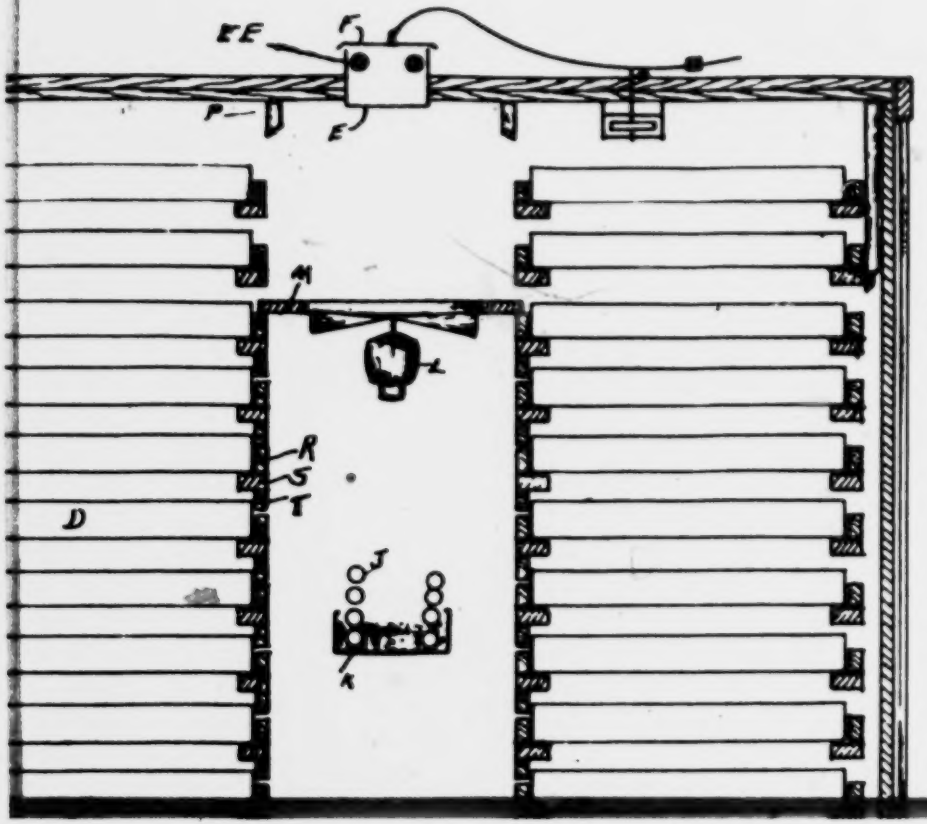

D - Egg trays, 24" x 36".

E - 5" exhaust with cap controled.

EE - 1" hole in side of "E" always open. There are four of these.

F - Cap covering "E" controled by thermostat.

G - ¾" fresh air intake, eleven to side.

J - Hot water heating coil.

K - Moisture pan surrounding "J".

L - 12" electric fan.

M - Fan panel

P - Upright strip that supports egg trays.

R - 1"x2" slat secured horizontally to "P".

S - 1"x2" slat secured to bottom of "R".

and recirculating air
means for supporting
id internal chambers,
the air located in the
substantially as and
bed.
have hereunto set my
signature in the presence of two subscribing witnesses.

CHARLES W. SCHWARTZ, JR.

Witnesses:
THOMAS M. SMITH,
RICHARD C. MAXWELL.

Incubator of E. H. SNOW, Sleepy Eye, Minn.

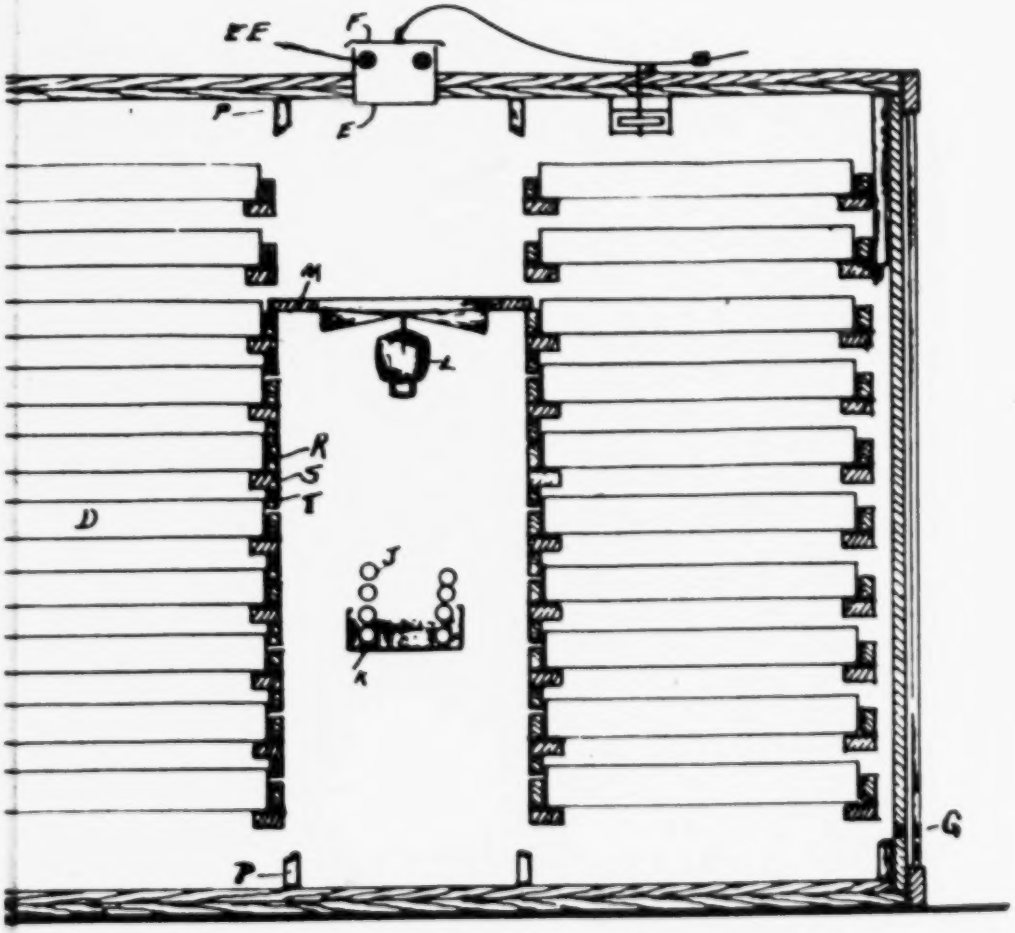

Sectional View with Front Removed.

D - Egg trays, 24" x 36".

E - 5" exhaust with cap controled.

EE - 1" hole in side of "E" always open. There are four of these.

F - Cap covering "E" controled by thermostat.

G - ¾" fresh air intake, eleven to side.

J - Hot water heating coil.

K - Moisture pan surrounding "J".

L - 12" electric fan.

M - Fan panel

P - Upright strip that supports egg trays.

R - 1"x2" slat secured horizontally to "P".

S - 1"x2" slat secured to bottom of "R".

T - 1"x2" slat secured to "P" under "S".

NOTE: Egg trays are spaced on 5" centers and trays are 3" high. This means that the space between "T" and the "R" immediately below varies from ½" to ¾" depending on the way the lumber is dressed.

Scale 1"=1'
J.T. 7/20/17

Def. Ex. U

833

ers, substantially as and
eribed.
f I have hereunto set my

Witnesses:
THOMAS M. SMITH,
RICHARD C. MAXWELL.

Incubator of E. H. SNOW, Sleepy Eye, Minn.

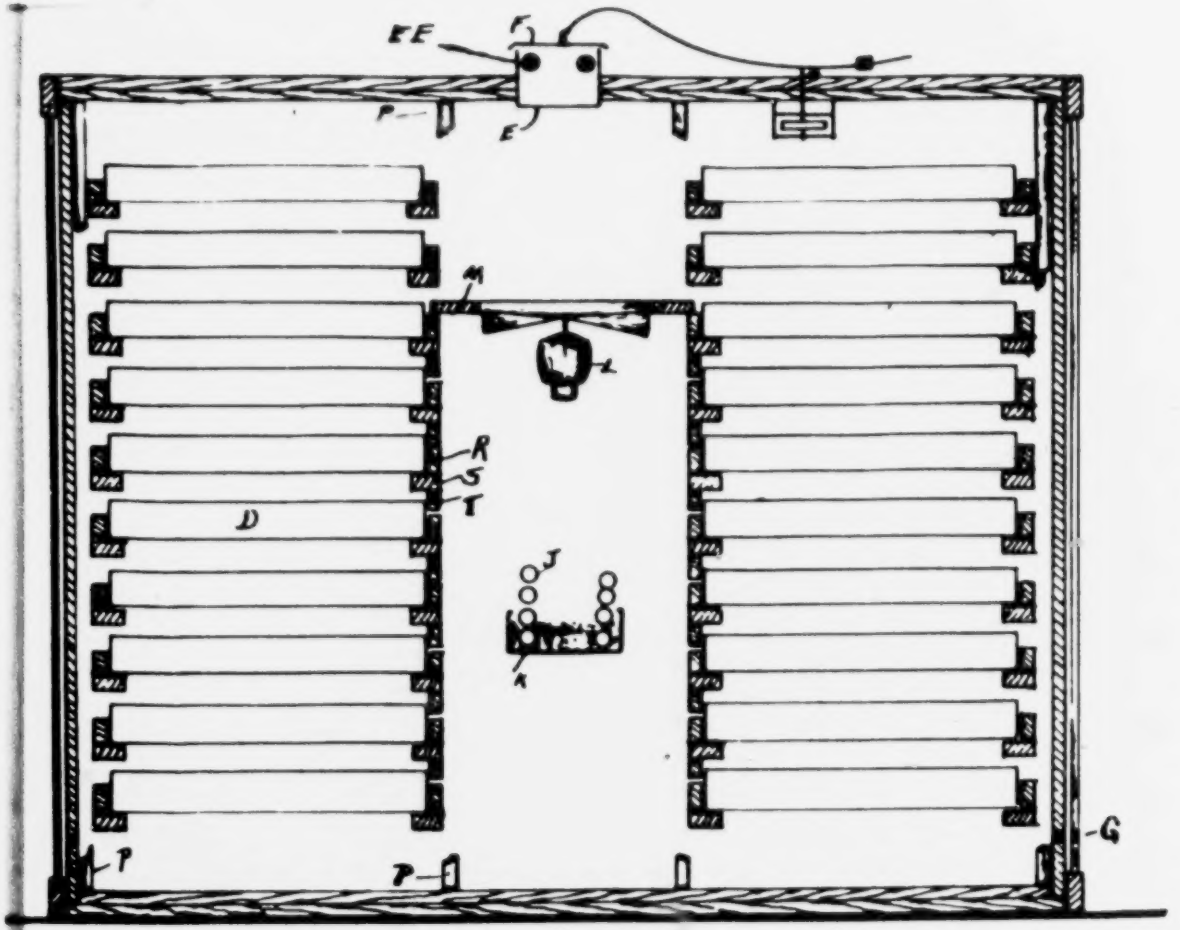

Sectional View with Front Removed.

D - Egg trays, 24" x 36".

E - 5" exhaust with cap controled.

EE - 1" hole in side of "E" always open. There are four of these.

F - Cap covering "E" controled by thermo

G - ¾" fresh air intake, eleven to side.

J - Hot water heating coil.

K - Moisture pan surrounding "J".

L - 12" electric fan.

M - Fan panel

P - Upright strip that supports egg tray

R - 1"x2" slat secured horizontally to "

S - 1"x2" slat secured to bottom of "R".

T - 1"x2" slat secured to "P" under "S".

NOTE: Egg trays are spaced on 5" center and trays are 3" high. This mean that the space between "T" and th "R" immediately below varies fro ½" to ¾" depending on the way the lumber is dressed.

Scale 1"=1'

J.I.T. 7/22/13

Def. Ex

U

836 Nov. 24, 1925. 1,562,787

I. M. PETERSIME

INCUBATOR

Filed May 22, 1923 3 Sheets-Sheet 3

Fig. 3.

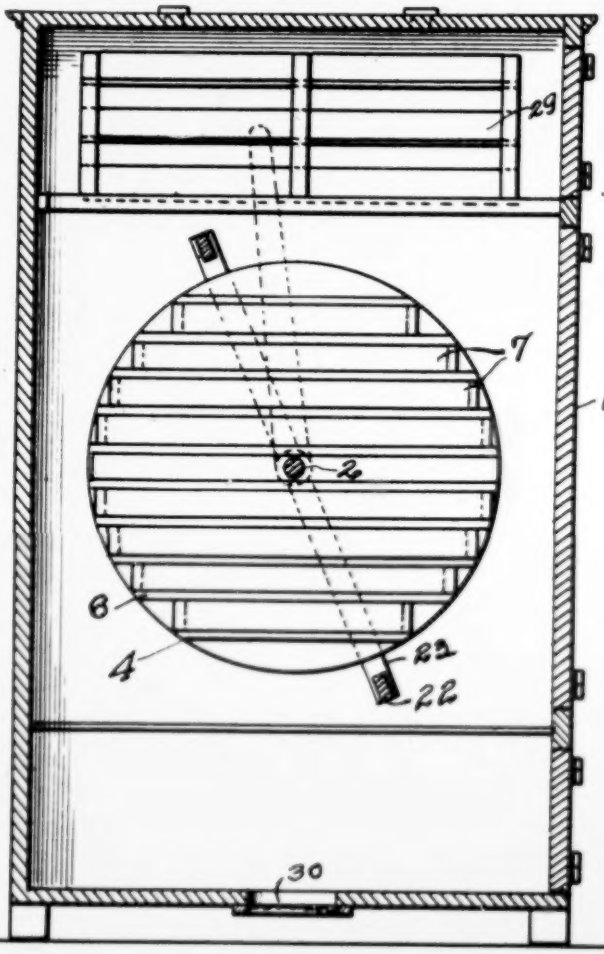

Fig. 5.

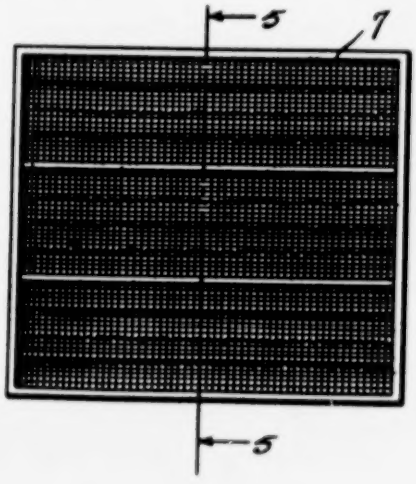

Fig. 4.

Inventor

Ira M Petersime

838 Nov. 24, 1925. 1,562,787

I. M. PETERSIME

INCUBATOR

Filed May 22, 1923 3 Sheets-Sheet 2

Fig. 2.

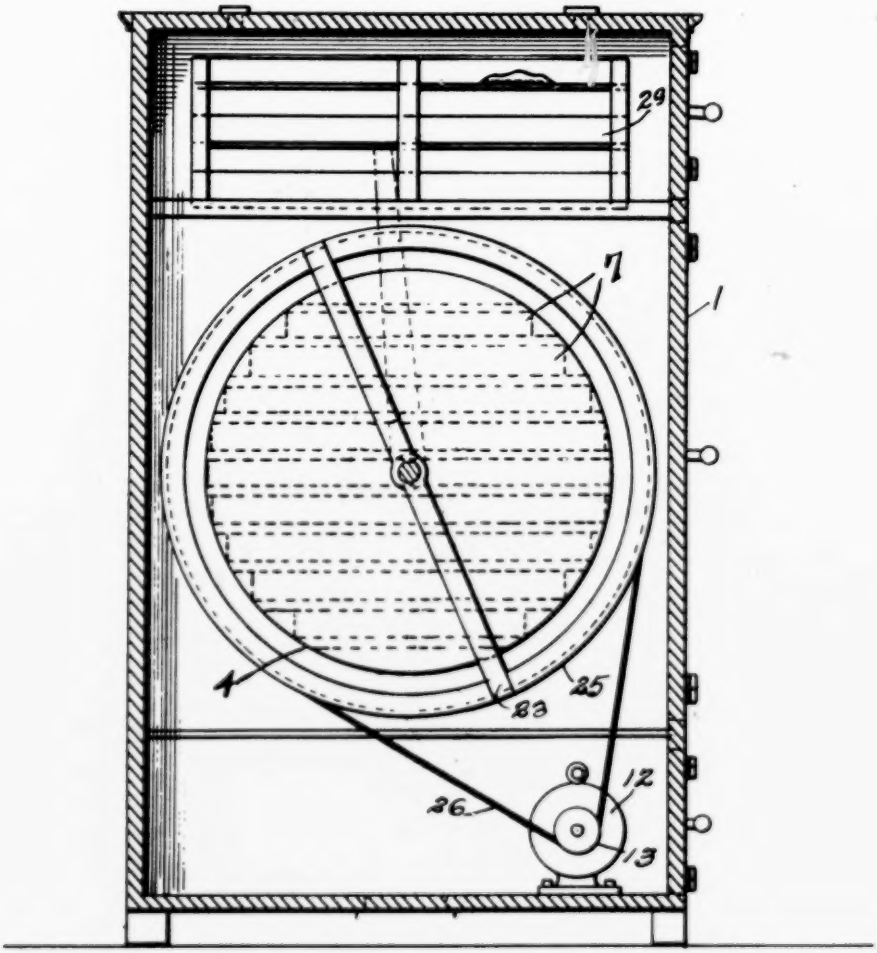

Fig. 6.

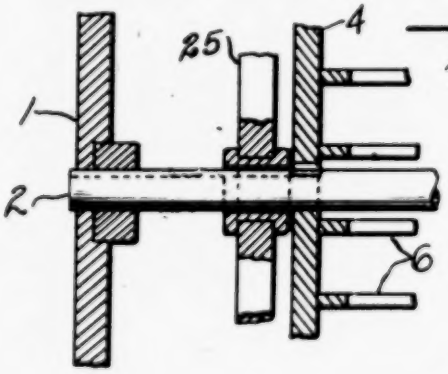

Inventor

Ira M Petersime

840 Nov. 24, 1925. 1,562,787

I. M. PETERSIME

INCUBATOR

Filed May 22, 1923 3 Sheets-Sheet 1

Fig. 1.

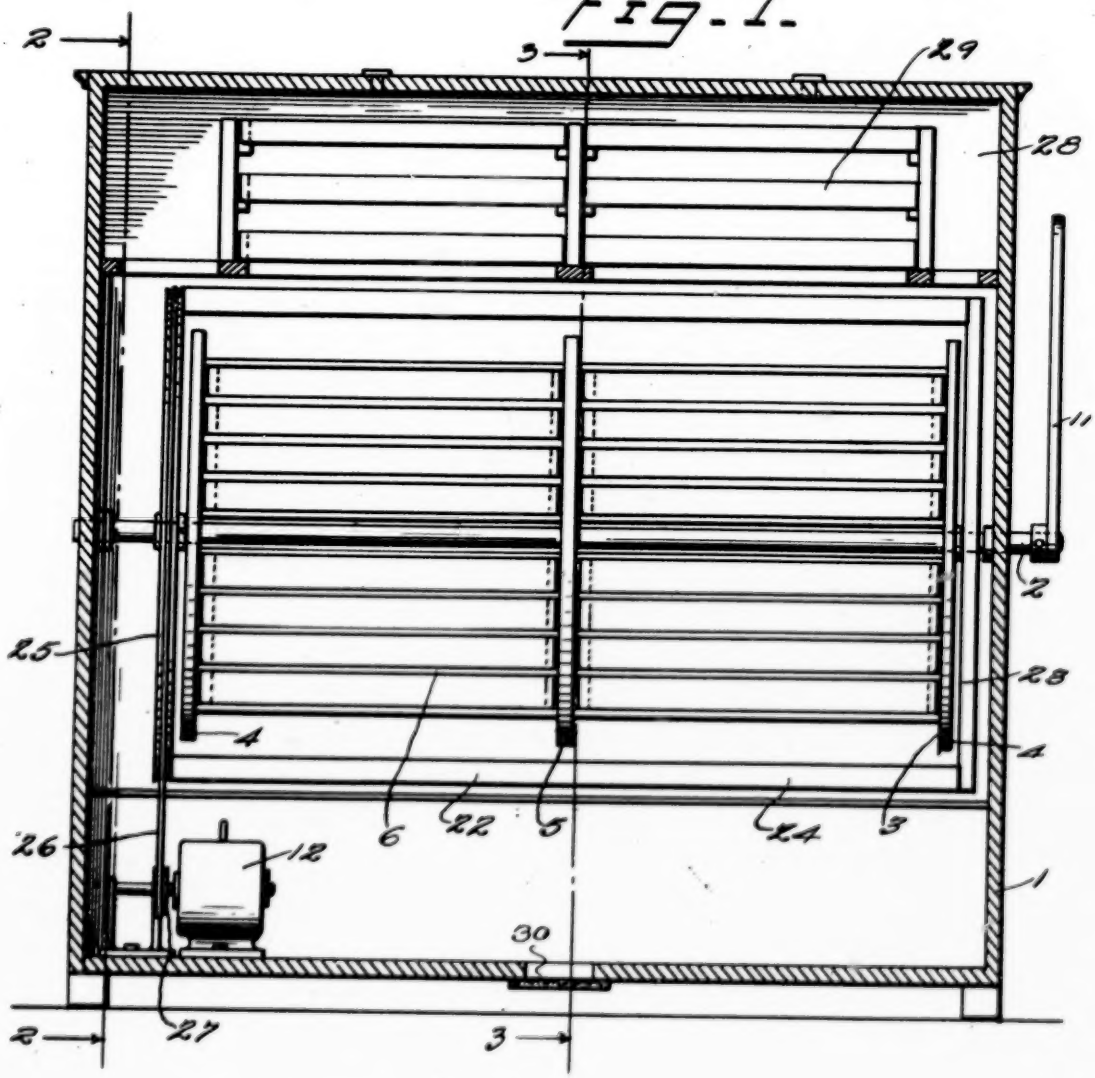

Inventor

Ira M Petersime

Patented Nov. 24, 1925.

UNITED STATES PATENT

IRA M. PETERSIME, OF GETTYSBURG, OHIO.

INCUBATOR.

Application filed May 22, 1923. Serial No. 640,736.

To all whom it may concern:

Be it known that I, IRA M. PETERSIME, a citizen of the United States, residing at Gettysburg, in the county of Darke and State of Ohio, have invented certain new and useful Improvements in an Incubator, of which the following is a specification.

This invention relates to mechanically operated incubators and more particularly to an improved device for containing incubator eggs and adapted to be operated by mechanical means whereby the eggs, during their preliminary period of incubation, will be turned and thereby subjected to an even temperature.

One of the objects of the invention is to provide a device of this character which may be heated by any suitable heating medium and which will be arranged to contain a quantity of eggs which can be slowly revolved within the cabinet, so that all of the eggs will be subjected to substantially the same conditions whereby greater efficiency will result.

A further object is the provision of a rotatable drum, and an agitator element having blades adapted to pass around the exterior of said drum to keep the air in motion and of the same temperature throughout the machine.

Other objects of the invention will appear upon consideration of the following detailed description and the accompanying drawings, in which:

Figure 1 is a vertical-longitudinal section through the device constructed in accordance with my invention.

Figure 2 is a transverse vertical section taken on the line 2—2 of Figure 1.

Figure 3 is a vertical-transverse section taken approximately on the line 3—3 of Figure 1.

Figure 4 is a plan view of one of the egg trays.

Figure 5 is a cross section taken on line 5—5 of Figure 4, and

Figure 6 is a detailed section through a portion of the mechanism.

Referring to the drawings by numerals, the cabinet 1 may be of any size or shape and is preferably provided with doors whereby access may be readily had to the interior. The cabinet is provided with a longitudinally extending shaft 2 having bearings in opposite walls of the cabinet, and this shaft is provided with a drum 3 for carrying the egg tray. The
end disc 4 and the cen
attached to the shaft 2
connected to the ends
tions 6 which are spac
spaces which provide
receive the egg trays 7
between the partitions
means (not shown).
various sizes according
drum 3, and consist o
tangular shallow tray p
bottom 8 and a top scre
verse screen partitions
eggs are placed so that
their proper position
displacement when the

The trays are inserte
ment in the drum throu
drum and, of course, ea
with eggs before it is pl
A handle or lever 11 on
2 permits the shaft to

It will be understood
of heat supply will be
electric heater, gas or
rial will also be suppli
maintain the proper h
known in the art. To k
tated, however, as is we
an agitator 22 is provid
the cross arms 23 on th
ends of the drum, and
provided with the bla
around the drum when
ated. One end of the
with a relatively large p
is trained a cable 26
pulley 27 on the shaft
different sizes of the pu
cause the agitator to
speed so that the moistur
agitated during the time
use. Above the drum se
is a top compartment 2
stationary trays 29 are l
found that in the use
during the first 18 days
kept in motion. At the
time the trays should be
in the top compartment
the bottom of the comp
an opening 30 to permit
to be inserted.

Minor changes may be
of construction without

1,562,787

I. M. PETERSIME

INCUBATOR

Filed May 22, 1923 3 Sheets-Sheet 1

Fig. 1.

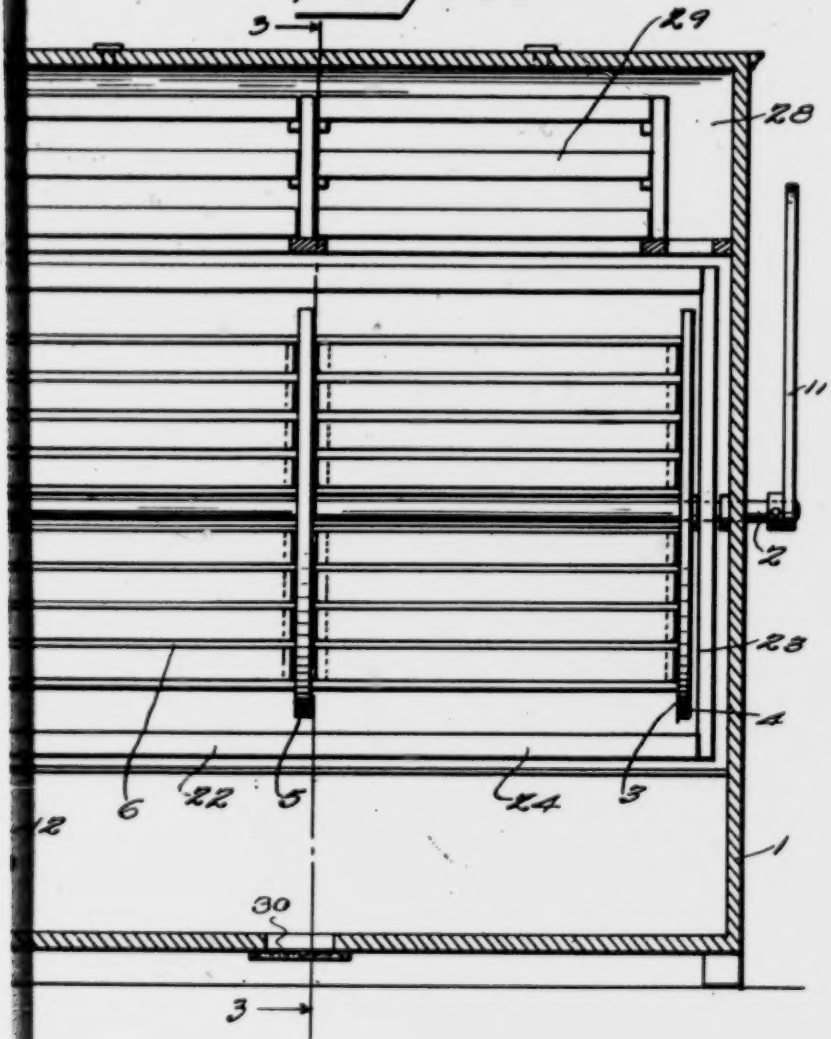

Inventor

Ira M Petersime

UNITED STATES PATENT OFFICE.

IRA M. PETERSIME, OF GETTYSBURG, OHIO.

INCUBATOR.

Application filed May 22, 1923. Serial No. 640,736.

To all whom it may concern:

Be it known that I, IRA M. PETERSIME, a citizen of the United States, residing at Gettysburg, in the county of Darke and State of Ohio, have invented certain new and useful Improvements in an Incubator, of which the following is a specification.

This invention relates to mechanically operated incubators and more particularly to an improved device for containing incubator eggs and adapted to be operated by mechanical means whereby the eggs, during their preliminary period of incubation, will be turned and thereby subjected to an even temperature.

One of the objects of the invention is to provide a device of this character which may be heated by any suitable heating medium and which will be arranged to contain a quantity of eggs which can be slowly revolved within the cabinet, so that all of the eggs will be subjected to substantially the same conditions whereby greater efficiency will result.

A further object is the provision of a rotatable drum, and an agitator element having blades adapted to pass around the exterior of said drum to keep the air in motion and of the same temperature throughout the machine.

Other objects of the invention will appear upon consideration of the following detailed description and the accompanying drawings, in which:

Figure 1 is a vertical-longitudinal section through the device constructed in accordance with my invention.

Figure 2 is a transverse vertical section taken on the line 2—2 of Figure 1.

Figure 3 is a vertical-transverse section taken approximately on the line 3—3 of Figure 1.

Figure 4 is a plan view of one of the egg trays.

Figure 5 is a cross section taken on line 5—5 of Figure 4, and

Figure 6 is a detailed section through a portion of the mechanism.

Referring to the drawings by numerals, the cabinet 1 may be of any size or shape and is preferably provided with doors whereby access may be readily had to the interior. The cabinet is provided with a longitudinally extending shaft 2 having bearings in opposite walls of the cabinet, and this shaft is provided with a drum 3 for carrying the egg tray. The drum 3 consists of the end disc 4 and the central disc 5, which are attached to the shaft 2, and these discs are connected to the ends of the dividing partitions 6 which are spaced apart to form the spaces which provide the compartments to receive the egg trays 7. The trays are held between the partitions 6 by any improved means (not shown). The egg trays are of various sizes according to their position in the drum 3, and consist of a substantially rectangular shallow tray provided with a screen bottom 8 and a top screen cover 9 and transverse screen partitions 10 between which the eggs are placed so that they will be held in their proper position and be held against displacement when the drum is rotated.

The trays are inserted into the compartment in the drum through either side of the drum and, of course, each tray will be filled with eggs before it is placed in the machine. A handle or lever 11 on the end of the shaft 2 permits the shaft to be rotated by hand.

It will be understood that a suitable source of heat supply will be provided, such as an electric heater, gas or oil lamp, and material will also be supplied to the cabinet to maintain the proper humidity, as is well known in the art. To keep the moisture agitated, however, as is well known in the art, an agitator 22 is provided which consists of the cross arms 23 on the shaft 2 at opposite ends of the drum, and these cross arms are provided with the blades 24 which rotate around the drum when the agitator is operated. One end of the agitator is provided with a relatively large pulley 25 over which is trained a cable 26 which passes over a pulley 27 on the shaft of the motor. The different sizes of the pulleys, of course, will cause the agitator to turn at the desired speed so that the moisture will be thoroughly agitated during the time the apparatus is in use. Above the drum section of the cabinet, is a top compartment 28 within which the stationary trays 29 are located, as it has been found that in the use of this device only during the first 18 days should the eggs be kept in motion. At the expiration of that time the trays should be removed and placed in the top compartment for hatching. At the bottom of the compartment 1 is shown an opening 30 to permit a heater or the like to be inserted.

Minor changes may be made in the details of construction without departing from the

spirit of the invention or the scope of the claims hereunto appended.

What I claim is:

1. An incubator comprising a cabinet, a shaft mounted in the cabinet, a drum mounted upon the said shaft for rotation thereon, a plurality of egg trays carried by the said drum and adapted to rotate therewith, an agitator element having blades adapted to pass around the exterior of the said drum, and means to actuate the said agitator element.

2. An incubator of the character described comprising a cabinet, a member arranged in said cabinet for supporting eggs in said cabinet, and an agitator element arranged in said cabinet and adapted to pass around the exterior of said egg supporting member.

3. An incubator comprising a cabinet, a shaft mounted in the cabinet, a drum mounted upon said shaft, a pair of members pivotally mounted on said shaft one at each end of said drum, a series of blades having their ends attached to said pivotally mounted members so that said members and blades will rotate together to form an agitator, and means engaging one of said pivotally mounted members to rotate the entire agitator.

4. An incubator including a heated cabinet equipped with egg holding means, and an agitator traveling around said means to maintain a uniform temperature in all parts of the cabinet.

5. An incubator including a heated cabinet equipped with egg supports, and means movable around the supports to maintain a uniform temperature around all of the supports.

6. An incubator including a heated egg containing cabinet, and an air agitator constantly traveling around the eggs in said cabinet.

In testimony whereof, I have affixed my signature.

IRA M. PETERSIME.

971

Plaintiff's Exhibits.

16)
17) Machines

Defendant's Exhibits.

F)
H) Machines

To Be Treated And Dealt With
Under Provisions of C. C. A.
Rule 34.

---

972 (Stipulation of Counsel Approving Statement
Evidence.)

In the United States District Court, District of M
Fourth Division.

Samuel B. Smith, Plaintiff,
No. 2119. vs. Equity.
E. H. Snow and E. H. Snow, d. b. a. Snow's Hatche
Snow's Incubator Company, Defendant.

It Is Hereby Stipulated And Agreed That the fore
a true and correct statement of the evidence in th
entitled cause as agreed upon by the parties, and the
hereby submitted for approval by the Court under
visions of Equity Rule 75.

Dated May 23, 1933.

PAUL, PAUL & MOORE,
Counsel for Plaintiff-Appellee.

WILLIAMSON & WILLIAMSO
Counsel for Defendant-Appella

(Approval of Statement of Evidence by District Ju

The foregoing stipulation and said statement of
dence in the above entitled cause are hereby appro
24th day of May, 1933.

JOSEPH W. MOLYNEAUX

(Endorsed:) Filed May 24, 1933. Joel M. Dickey
By Thomas H. Howard, Deputy.

tion or the scope of the
pended.

comprising a cabinet, a
he cabinet, a drum mount-
haft for rotation thereon,
trays carried by the said
d to rotate therewith, an
having blades adapted to
xterior of the said drum,
uate the said agitator ele-

of the character described
net, a member arranged in
pporting eggs in said cabi-
ator element arranged in
adapted to pass around the
gg supporting member.

r comprising a cabinet, a
the cabinet, a drum mount-
ft, a pair of members piv-
n said shaft one at each end
eries of blades having their ends attached to said pivotally mounted members so that said members and blades will rotate together to form an agitator, and means engaging one of said pivotally mounted members to rotate the entire agitator.

4. An incubator including a heated cabinet equipped with egg holding means, and an agitator traveling around said means to maintain a uniform temperature in all parts of the cabinet.

5. An incubator including a heated cabinet equipped with egg supports, and means movable around the supports to maintain a uniform temperature around all of the supports.

6. An incubator including a heated egg containing cabinet, and an air agitator constantly traveling around the eggs in said cabinet.

In testimony whereof, I have affixed my signature.

IRA M. PETERSIME.

971 Plaintiff's Exhibits.

16)
17) Machines

Defendant's Exhibits.

F)
H) Machines

To Be Treated And Dealt With

Under Provisions of C. C. A.

Rule 34.

---

972 (Stipulation of Counsel Approving Statement of Evidence.)

In the United States District Court, District of Minnesota, Fourth Division.

Samuel B. Smith, Plaintiff,
No. 2119. vs. Equity.
E. H. Snow and E. H. Snow, d. b. a. Snow's Hatcheries and Snow's Incubator Company, Defendant.

It Is Hereby Stipulated And Agreed That the foregoing is a true and correct statement of the evidence in the above entitled cause as agreed upon by the parties, and the same is hereby submitted for approval by the Court under the provisions of Equity Rule 75.

Dated May 23, 1933.

PAUL, PAUL & MOORE,
Counsel for Plaintiff-Appellee.

WILLIAMSON & WILLIAMSON,
Counsel for Defendant-Appellant.

(Approval of Statement of Evidence by District Judge.)

The foregoing stipulation and said statement of the evidence in the above entitled cause are hereby approved this 24th day of May, 1933.

JOSEPH W. MOLYNEAUX,
Judge.

(Endorsed:) Filed May 24, 1933. Joel M. Dickey, Clerk. By Thomas H. Howard, Deputy.

1013 (Clerk's Certificate to Transcript.)

United States of America.

District Court of the United States, District of Minnesota, Fourth Division.

I, Joel M. Dickey, Clerk of said District Court, do hereby certify and return to the Honorable, the United States Circuit Court of Appeals for the Eighth Circuit, that the foregoing, consisting of 1012 pages, including certain blank pages shown at the foot hereof, numbered consecutively from 1 to 1012, inclusive, is a true and complete transcript of the record and proceedings in said cause, wherein Samuel B. Smith is plaintiff, and E. H. Snow and E. H. Snow, d. b. a. Snow's Hatcheries and Snow's Incubator Company are defendants, and of the whole thereof, (except as modified by the stipulated praecipe of said parties to be found at page 1003 of said transcript) as appears from the original records and files of said Court; and I do hereby further certify and return that I have annexed to said transcript and included within said paging the original Citation, together with proof of service thereon.

Seal
U. S. Dist. Court,
Dist. of Minnesota,
Fourth Division.

In Witness Whereof, I have hereunto set my hand, and affixed the seal of said Court at Minneapolis, in the District of Minnesota, this 27th day of May, A. D. 1933.

JOEL M. DICKEY, Clerk,
By Thomas H. Howard, Deputy Clerk.

Filed May 29, 1933, E. E. Koch, Clerk.

---

1 Stipulation as to File Wrapper Record Smith Patent in Suit, 1,262,860 of April 16, 1918.

In the United States Circuit Court of Appeals, Eighth Circuit.

E. H. Snow, et al., Appellants,
Case No. 9757. vs.
Samuel B. Smith, Appellee.

Appeal from the Fourth Division of the U. S. District Court, District of Minnesota, in Equity Case 2119.

Counsel for the parties hereby represent and stipulate as follows:

Representations:

We hereby represent that the file wrapper record of Smith patent in suit, 1,262,860 of April 16, 1918, entitled "cubator" was introduced in evidence on behalf of the defe ants, at the trial of the case in the U. S. District Court, D trict of Minnesota and was there marked "Defendants' hibit O", that in the stipulated praecipe of transcript it provided that the said file wrapper record, to-wit: Defe ants' Exhibit O, might be regarded as a physical exhibit a be transmitted with the other physical exhibits to the Circ Court of Appeals; and we hereby further represent that said Exhibit O contained two distinct portions, the first which, composed of pages 1 to 59 thereof, a copy of the pat and two pages entitled "Contents", relates to the history the application in the Patent Office, and the second portion which, composed of pages 60 to 143 inclusive, gives the id tifications of the various suits brought for the alleged fringement of said patent and shed no light whatever on history of the Smith application which matured into above identified patent in suit; and we hereby further rep sent that Appellant's counsel has been advised by the Cl of the Circuit Court of Appeals, that, in his opini
2 it is desirable, under Section 3 of Rule 14 of the s Court of Appeals, to have the application record said Smith patent in suit printed for use in the Court of A peals.

Stipulation:

In view of the foregoing facts, it is hereby stipulated t the first portion of the said Defendant's Exhibit O, to-w pages 1 to 59 inclusive, a copy of the patent and the t pages of said Exhibit O, entitled "Contents", may be ce fied to by the Clerk of the Trial Court and be sent up by h to the Court of Appeals and be printed as part of the tra script on appeal, subject to verification by reference to original exhibit, which will be sent up as a physical exhi

WILLIAMSON & WILLIAMSON,
Counsel for Appellants.

Dated: June 5th, 1933.

A. C. Ely,
Counsel for Appellee.

Dated: June 7, 1933.

1013 (Clerk's Certificate to Transcript.)

United States of America.

District Court of the United States, District of Minnesota, Fourth Division.

I, Joel M. Dickey, Clerk of said District Court, do hereby certify and return to the Honorable, the United States Circuit Court of Appeals for the Eighth Circuit, that the foregoing, consisting of 1012 pages, including certain blank pages shown at the foot hereof, numbered consecutively from 1 to 1012, inclusive, is a true and complete transcript of the record and proceedings in said cause, wherein Samuel B. Smith is plaintiff, and E. H. Snow and E. H. Snow, d. b. a. Snow's Hatcheries and Snow's Incubator Company are defendants, and of the whole thereof, (except as modified by the stipulated praecipe of said parties to be found at page 1003 of said transcript) as appears from the original records and files of said Court; and I do hereby further certify and return that I have annexed to said transcript and included within said paging the original Citation, together with proof of service thereon.

Seal U. S. Dist. Court, Dist. of Minnesota, Fourth Division.

In Witness Whereof, I have hereunto set my hand, and affixed the seal of said Court at Minneapolis, in the District of Minnesota, this 27th day of May, A. D. 1933.

JOEL M. DICKEY, Clerk,
By Thomas H. Howard, Deputy Clerk.

Filed May 29, 1933, E. E. Koch, Clerk.

---

1 Stipulation as to File Wrapper Record Smith Patent in Suit, 1,262,860 of April 16, 1918.

In the United States Circuit Court of Appeals, Eighth Circuit.

E. H. Snow, et al., Appellants,
Case No. 9757. vs.
Samuel B. Smith, Appellee.

Appeal from the Fourth Division of the U. S. District Court, District of Minnesota, in Equity Case 2119.

Counsel for the parties hereby represent and stipulate as follows:

Representations:

We hereby represent that the file wrapper record of the Smith patent in suit, 1,262,860 of April 16, 1918, entitled "Incubator" was introduced in evidence on behalf of the defendants, at the trial of the case in the U. S. District Court, District of Minnesota and was there marked "Defendants' Exhibit O", that in the stipulated praecipe of transcript it was provided that the said file wrapper record, to-wit: Defendants' Exhibit O, might be regarded as a physical exhibit and be transmitted with the other physical exhibits to the Circuit Court of Appeals; and we hereby further represent that the said Exhibit O contained two distinct portions, the first of which, composed of pages 1 to 59 thereof, a copy of the patent and two pages entitled "Contents", relates to the history of the application in the Patent Office, and the second portion of which, composed of pages 60 to 143 inclusive, gives the identifications of the various suits brought for the alleged infringement of said patent and shed no light whatever on the history of the Smith application which matured into the above identified patent in suit; and we hereby further represent that Appellant's counsel has been advised by the Clerk of the Circuit Court of Appeals, that, in his opinion, it is desirable, under Section 3 of Rule 14 of the said Court of Appeals, to have the application record of said Smith patent in suit printed for use in the Court of Appeals.

2

Stipulation:

In view of the foregoing facts, it is hereby stipulated that the first portion of the said Defendant's Exhibit O, to-wit: pages 1 to 59 inclusive, a copy of the patent and the two pages of said Exhibit O, entitled "Contents", may be certified to by the Clerk of the Trial Court and be sent up by him to the Court of Appeals and be printed as part of the transcript on appeal, subject to verification by reference to the original exhibit, which will be sent up as a physical exhibit.

WILLIAMSON & WILLIAMSON,
Counsel for Appellants.

Dated: June 5th, 1933.

A. C. Ely,
Counsel for Appellee.

Dated: June 7, 1933.

Order.

The foregoing stipulation is hereby approved and it is hereby ordered that the same be carried into effect.

JOSEPH W. MOLYNEAUX,
District Judge.

Dated: June 9th, 1933.

(Endorsed): Filed June 9, 1933. Joel M. Dickey, Clerk. By Thomas H. Howard, Deputy.

Filed Jun. 17, 1933. E. E. Koch, Clerk.

NUMBER (Series of 1915), 127915

1916

(EX'R'S BOOK) E

DIV. 38

PATENT No. 1262

Name Samuel B. Smith,
Assg to The Buckeye Incubator
of Springfield, Ohio, a corp. of O

of Cleveland,

County of

State of Ohio

Invention Incubators,

PARTS OF APPLICATION FILED.

	ORIGINAL	RENEWED
Petition	Oct. 26, 1916	
Affidavit	" " , 1916	
Specification	" " , 1916	
Drawing 2 Shts	" " , 1916	
Photo Copy	, 191	
First Fee Cash $15	Oct 26, 1916	
" " Cert.	, 191	
Appl. filed complete	Oct 26, 1916	

, filed , 191

Examined and Passed to Issue May 8 1917

Order.

oregoing stipulation is hereby approved and it is ordered that the same be carried into effect.

JOSEPH W. MOLYNEAUX,
District Judge.

June 9th, 1933.

rsed): Filed June 9, 1933. Joel M. Dickey, Clerk.
as H. Howard, Deputy.

Jun. 17, 1933. E. E. Koch, Clerk.

3 (Defendants' Exhibit O, File Wrapper and Contents.)

NUMBER (Series of 1915), 127915

1916

(EX'R'S BOOK) E 126/6

DIV. 38

PATENT No. 1262860

Name Samuel B. Smith
Assg to The Buckeye Incubator Co.,
of Springfield, Ohio, a corp. of Ohio

of Cleveland,

County of

State of Ohio.

Invention Incubators.

PARTS OF APPLICATION FILED.	ORIGINAL	RENEWED
Petition	Oct. 26, 1916	, 191
Affidavit	" " , 1916	, 191
Specification	" " , 1916	, 191
Drawing 2 Shts	" " , 1916	, 191
Photo Copy	, 191	, 191
First Fee Cash $15.	Oct 26, 1916	, 191
" " Cert.	, 191	, 191
Appl. filed complete	Oct 26, 1916	, 191
Examined and Passed for Issue	Mar 8, 1918	, 191
J. A. Ede	Exr. Div. 38	Exr. Div.
Notice of Allowance	Mch. 12, 1918	, 191
Final Fee Cash $20	May 18, 1918	, 191
" Cert.	, 191	, 191
Patented	APR 16 1918	, 191

filed , 191

Division of App., No.

JOSEPH W. MOLYNEAUX,
District Judge.

une 9th, 1933.

ed): Filed June 9, 1933. Joel M. Dickey, Clerk.
s H. Howard, Deputy.

n. 17, 1933. E. E. Koch, Clerk.

Name [illegible]

Assn to The Buckeye Incubator Co., of Springfield, Ohio, a corp. of Ohio

of Cleveland,

County of

State of Ohio

Invention Incubators.

Division of App., No. ....., filed ....., 191

PARTS OF APPLICATION FILED.

	ORIGINAL	RENEWED
Petition	Oct. 26, 1916	191
Affidavit	" " , 1916	191
Specification	" " , 1916	, 191
Drawing 2 Shts	" " , 1916	, 191
Photo Copy	, 191	, 191
First Fee Cash	$15 Oct 26, 1916	, 191
" " Cert.	, 191	, 191
Appl. filed complete	Oct 26, 1916	, 191

Examined and Passed for Issue Mar 8, 1918 — , 191

S. A. Ide Exr. Div. 38 — Exr. Div.

Notice of Allowance Mch. 12, 1918 By Commissioner. — , 191 By Commissioner.

Final Fee Cash $20 Mar 18, 1918 — , 191

" Cert. , 191 — , 191

APR 16 1918

Patented , 191

Attorney Staley + Bowman, Gotwald Bldg Springfield, Ohio

Associate Attorney Percy Norton Springfield Ohio

(1)

(No. of Claims Allowed 5) Title as Allowed Incubators

(Old Claims 1 and 5)

(Ch. 11 9 — 3)

OCT 26 1916

October 24th, 1916.

Commissioner of Patents,

Sir:-

We send you herewith an application of Samuel B. Smith for patent for improvements in Incubators. Enclosed is our check for $15.00 to cover the first fee thereon.

Respectfully,

STALEY & BOWMAN

CIW/B

PETITION

TO THE COMMISSIONER OF PATENTS:

YOUR PETITIONER , Samuel B. Smith, a citizen of the United States, residing at Cleveland, in the County of Cuyahoga and State of Ohio whose Post Office address is Cleveland, Cuyahoga County, Ohio prays that Letters Patent may be granted to him for the IMPROVEMENT IN INCUBATORS set forth in the annexed specification; and he hereby appoints STALEY & BOWMAN [No. 5056,] a firm composed of Paul A. Staley and Border Bowman, of Springfield, Ohio, his Attorneys, with full power of substitution and revocation, to prosecute this application, to make alterations and amendments therein, to receive the Patent and to transact all business in the Patent Office connected therewith.

Samuel B Smith

(Inventor signs here first name in full)

SPECIFICATION

TO THE COMMISSIONER OF PATENTS:

YOUR PETITIONER , Samuel B. Smith, a citizen of the United States, residing at Cleveland, in the County of Cuyahoga and State of Ohio whose Post Office address is Cleveland, Cuyahoga County, Ohio prays that Letters Patent may be granted to him for the IMPROVEMENT IN INCUBATORS set forth in the annexed specification; and he hereby appoints STALEY & BOWMAN [No. 5055,] a firm composed of Paul A. Staley and Border Bowman, of Springfield, Ohio, his Attorneys, with full power of substitution and revocation, to prosecute this application, to make alterations and amendments therein, to receive the Patent and to transact all business in the Patent Office connected therewith.

Samuel B. Smith

(Inventor sign here first name in full)

SPECIFICATION

TO ALL WHOM IT MAY CONCERN:

Be It Known, That I, Samuel B. Smith, a citizen of the United States, residing at Cleveland, in the County of Cuyahoga and State of Ohio have invented certain new and useful improvements in INCUBATORS of which the following is a specification:

The improved apparatus and method, is particularly designed for extensive operations wherein a chamber of large dimensions is adapted to contain thousands of eggs in separate trays arranged in tiers and the method of heating is such that the heated air is adapted to the eggs in various stages of incubation. There is a forced circulation of hot air through the chamber which is adapted preferably to maintain all eggs at temperatures between 99° and 106° Fahrenheit approximately and this improved system contemplates that fresh eggs will be placed in a horizontal plane, preferably by means of trays supported in horizontal planes, and after the eggs have been subject to the circulation of hot air for a predetermined time (the air circulating largely around the eggs) they will be placed in a tilted or inclined position in a different location but still subject to the same column of air and at this period of incubation they will be tilted in different planes at regular intervals during the time they remain in this latter position, and after they have remained for a predetermined time they will be again moved to a different position with reference to the forced circulation of hot air and so placed therein that the air will tend to keep the eggs below 105° temperature, and in this last named position the air will be forced to pass between the different eggs and will in effect act as a cooling medium for the eggs.

In the accompanying drawings:

Fig. 1 is a cross section of my improved incubator.

Fig. 2 is a perspective view of one of the egg trays with one end removed to more clearly disclose the open mesh bottom.

Fig. 3 is a vertical section of the incubator on line 3 -3, Fig. 1.

Fig. 4 is a perspective view of a portion of one of the tilting racks for the trays.

The invention comprises a walled chamber 2 corresponding in size to that of an ordinary room, say approximately nine feet

high, eight to ten feet wide, and of any desired length, and this chamber is subdivided longitudinally by two parallel rows of curtains 3 and 4 to provide a central compartment or corridor 5 and side compartments 6 and 7. Entrance to the corridor is gained by a door 8, and the compartments behind the curtains contain elevated stationary racks 9 which are within convenient reach of the attendant for introducing the fresh supply and from which elevated position the trays may be shifted at the proper time to a tier of tilting racks 10 on a lower plane and suspended therefrom by links 11. A series of stationary racks 12 are also arranged beneath the tilting racks 10, and all of said racks are of open construction and of the same size to permit interchange of the shallow trays 13 for the eggs to be hatched. These trays are provided with open mesh bottoms 14 upon which the smaller ends of the eggs rest in close and solid formation, and each tray of eggs occupies the upper rack 9 for the first three days, and is then transferred to a place in the upper end of the tilting rack 10. During the next fifteen days the trays in the tilting rack are shifted from higher to lower planes therein and tilted at frequent intervals to stand in oppositely-inclined positions. The tilting of the eggs is preferably arranged to put the eggs substantially on their sides. When the eggs in the lower-most trays in the tilting racks 10 are about ready to hatch each tray is transferred to the stationary rack 12 where the chicks may be removed as occasion requires.

Each tilting rack 10 comprises perpendicular corner bars 15 pivotally united by a series of cross bars 16 carrying connecting angle irons 17 extending from front to rear at each side and upon which the trays are adapted to be slidably supported. The links 11 are pivotally connected at the center of the uppermost cross bars 16 of each tilting rack, thus permitting an entire series of trays to be placed in an inclined position by merely raising or lowering one side of the rack by hand engagement. The weight and friction and balance of the parts cause the

trays to remain in any shifted position, whether horizontal or inclined. The fans or series of fans 18 mounted upon the hinged trap doors 19 forming the ceiling of the central corridor 5 constitute the means for forcing the hot air through the chamber and there are circular openings 20 provided in said doors within which the fans are arranged properly. The longitudinal space 21 above the fans has open communication above the side walls 22 with the upper ends of the rack compartments behind the curtains 3 and 4 and these curtains extend a sufficient distance, as indicated in Fig. 1, to cause the heated air distributed by the fans to pass downwardly through the central corridor to a point near the bottom of the chamber where it can pass into the space occupied by the trays. As explained later the trays near the bottom are preferably arranged so that the air is forced to pass between the eggs in each tray thereby cooling or holding the temperature of those eggs down. Thence the air passes into spaces above the lower series of trays until it reaches the distributing space 21 above the fan. Coils of heating pipe 23 are arranged in the space 21 to heat the air and more or less fresh air may be taken in through the valved opening 24 above the space 21 and this fresh supply of air may be charged with steam to a greater or less degree by means of a valve controlled jet or pipe 26 see Fig. 3. By lowering the hinged trap doors, the motor and fan are also easily reached for inspection, etc.

In Fig. 3 only a single curtain 3 is shown in place, the curtain or curtains at the right being entirely removed to disclose the racks and trays in full lines, and it will be also noted that the vertical spaces 27 between the adjacent tilting racks 10 are closed at their lower ends by flexible strips of fabric which are attached to and extend upward at each side of each rack so as to compel the air to circulate through the mesh bottom and around and about each egg as heretofore referred to, and as the eggs further advanced in incubation are contained in

these lower trays and as the danger is that the temperature will rise in these eggs to a point injurious to incubation the improved method disclosed herein permits the circulating air to act as a medium to prevent the over heating at this stage of incubation and this is accomplished by promoting an induced draft within the lower trays. It is obvious that the fans can be so arranged and can be operated at such speed as to cause the hot air to circulate fast enough to keep the temperature throughout the chamber between the limits of ~~98°~~ 100° and ~~106°~~ 105°.

It, therefore, appears that the improved apparatus and method contemplates the application of hot air circulating in a column with such speed as to keep the temperature substantially uniform and so arranging the eggs that the fresh eggs are placed at one point in the column of air and held in a horizontal plane until they reach a predetermined stage of incubation and then put at a different point in the same column of air and kept in planes inclined to the horizontal and thereafter placed at such a point in the column of air that the forced draft of air acts to hold the eggs at a uniform temperature and to prevent them from becoming overheated and thereafter placing the eggs into final position for the hatching operation.

Any suitable thermostatic means may be employed for regulating the temperature, such for instance as a thermostat commonly employed in incubators of a well-known construction and illustrated in letters-patent No. 1,111,138, dated September 22nd, 1914, which thermostat may be suitably connected to the valve controlling the steam or hot water, as the case may be, which passes through the pipes 23.

Having thus described my invention, I claim:-

1. The method of hatching eggs by arranging the eggs in a column and applying heated air impelled about the eggs, the heated air being adapted to the eggs in various stages of incubation.

2. The method of hatching eggs consisting of arranging the eggs in a column and forcing heated air through and about the eggs, the air being impelled from the bottom upwardly and having the eggs in the earliest stages of incubation at the upper part of the column arranged in substantially horizontal planes and the eggs in later stages of incubation arranged in planes inclined to the horizontal and at a different place in the same column of air, for the purpose specified.

3. The method of hatching eggs consisting of arranging the eggs in columns and applying heated air forced through and about the column of eggs, the air being impelled upwardly throughout the column of eggs, the eggs in different stages of incubation being placed in different parts of the column of heated air and the eggs in more advanced stages of incubation being arranged in tilted position for the purpose specified.

4. The method of hatching eggs, consisting of arranging the eggs in columns and applying heated air to said column of eggs, the air being forced through same from the bottom of said column upwardly toward the top thereof, and having the eggs in the earliest stages of incubation in one place in the column so arranged that the air can circulate around them and the eggs in the more advanced stages of incubation arranged at a different plane in the column of air whereby the air will be forced through and between the different eggs, for the purpose specified.

Pu B
Pu A
Insert B'
Sub. C.

1. The method of hatching eggs [illegible] eggs of various stages of incubation in a column and applying heated air impelled ~~forced~~ about the eggs, the heated air being adapted to the eggs in various stages of incubation.

Pu A
" B
" "

2. The method of hatching eggs consisting of arranging the eggs in a column and forcing heated air through and about the eggs the air being impelled from the bottom upwardly and having the eggs in the earliest stages of incubation at the upper part of ~~at one place in~~ the column arranged in substantially horizontal planes and the eggs in later stages of incubation arranged in planes inclined to the horizontal and at a different place in the same column of air, for the purpose specified.

Pu A
" B

3. The method of hatching eggs consisting of arranging the eggs in columns and applying heated air forced through and about the column of eggs the air being impelled upwardly throughout the column of eggs, the eggs in different stages of incubation being placed in different parts of the column of heated air and the eggs in more advanced stages of incubation being arranged in tilted position for the purpose specified.

Pu B

4. The method of hatching eggs, consisting of arranging the eggs in columns and applying heated air to said column of eggs from the bottom of said column upwardly toward the top thereof, the air being forced through same and having the eggs in the earliest stages of incubation in one place in the column so arranged that the air can circulate around them and the eggs in the more advanced stages of incubation arranged at a different plane in the column of air whereby the air will be forced through and between the different eggs, for the purpose specified.

5. In an incubator, a chamber having racks and trays for the eggs, and a power-driven fan to produce a flow

of heated air through said racks and trays.

6. In an incubator, a chamber having trays for the eggs arranged in tiers, and means to promote a draft of air through the trays containing the eggs in the last stages of incubation.

7. In an incubator, a chamber and trays for the eggs arranged in tiers therein, means to heat said eggs to incubation temperature, and means to circulate the air through each tier of trays.

8. In an incubator, a chamber, means to heat air and means to circulate the heated air within said chamber, a tilting rack within said chamber, and trays for the eggs carried by said rack.

9. In an incubator, a chamber having means to heat the air and means to circulate the heated air therein, and a hinge-jointed rack suspended in said chamber adapted to support a tier of egg-trays in differently-inclined positions.

10. In an incubator, a rack comprising parallel upright members having hinged cross pieces adapted to support separate trays at different elevations, and suspensory means in equalizing pivotal connection with said rack adapting all the trays carried by said racks to be tilted to corresponding inclined positions.

11. In an incubator, a chamber and a rack and trays therein, a fan and means to operate the same to circulate air upwardly through said rack and trays, means to heat the eggs uniformly within said chamber, and means to regulate admission of fresh air into and foul air out of said chamber.

12. In an incubator, a chamber having a rack and egg trays removably mounted upon said rack, a power driven fan to circulate air through said chamber, means to heat the air within said chamber, and means to supply vapor for intermixture and circulation with said air.

13. In an incubator, a chamber having a series racks therein and egg trays mounted in said racks, and means to circulate heated air into and through each rack and its trays.

14. In an incubator, a chamber having a series of tilting racks therein and egg trays mounted in tiers in each rack, means to enclose the space between the racks and tiers at the bottom of said racks, and means to circulate air through said bottom trays.

15. In an incubator, a chamber having a compartment provided with an air-circulating fan and a second compartment at one side of the first compartment having tiers of removable open egg trays and upper and lower communicating passages to permit circulation of air in the same direction continuously through said trays.

16. In an incubator, a chamber having a curtain subdividing it into two compartments, one of said compartments having tiers of egg-trays therein, a power driven fan in air-circulating communication with both compartments, and means to heat the air circulated by said fan.

~~17.~~ 8. In an incubator, a closed chamber having a curtained corridor and compartments at each side thereof and an upper air-distributing space, an air-circulating fan and means to heat the air in said upper space, and racks having removable

935V-55

egg-trays superimposed in said side compartments.

14 ~~18.~~ In an incubator, a ~~closed~~ closed chamber having a compartment provided with a power driven fan hinged to swing downwardly from the ceiling thereof, and tiers of egg-trays having therein eggs in various stages of incubation in said chamber having open communication with said compartment adapted to ~~circulate~~ to circulate the air through ~~said~~ the trays.

19. In an incubator, a compartmented chamber having separate tiers of open-bottomed egg-trays in one or more of the chamber compartments, means to produce a forced circulation of heated air within said compartmented chamber, and means to produce conflux of air-currents through one end of each tier of trays.

20. In an incubator, a compartmented chamber having an air-distributing space provided with a fresh-air intake, separate tiers of open-bottomed egg-trays in one or more of the compartments, a power driven fan to circulate heated air within said compartmented chamber, and means to produce conflux of air-current through the bottom of each tier of egg-trays.

21. In an incubator, a compartmented chamber having separate tilting racks provided with egg-trays having air passages in their bottoms, flexible enclosing means for said racks, and means to produce a forced circulation of heated air through said enclosed racks and egg-trays therein.

22. In an incubator, a compartmented chamber and a power-driven fan to circulate heated air therethrough, stationary egg-tray racks in the upper and lower [illegible]

18. In an incubator, a closed chamber having a compartment provided with a power driven fan hinged to swing downwardly from the ceiling thereof, and tiers of egg-trays in said chamber having open communication with said compartment adapted to circulate the air through said trays.

19. In an incubator, a compartmented chamber having separate tiers of open-bottomed egg-trays in one or more of the chamber compartments, means to produce a forced circulation of heated air within said compartmented chamber, and means to produce conflux of air-currents through one end of each tier of trays.

20. In an incubator, a compartmented chamber having an air-distributing space provided with a fresh-air intake, separate tiers of open-bottomed egg-trays in one or more of the compartments, a power driven fan to circulate heated air within said compartmented chamber, and means to produce conflux of air-current through the bottom of each tier of egg-trays.

21. In an incubator, a compartmented chamber having separate tilting racks provided with egg-trays having air passages in their bottoms, flexible enclosing means for said racks, and means to produce a forced circulation of heated air through said enclosed racks and egg-trays therein.

22. In an incubator, a compartmented chamber and a power-driven fan to circulate heated air therethrough, stationary egg-tray racks in the upper and lower portions of one chamber compartment and separate tilting egg-tray racks intermediate said upper and lower stationary racks.

23. In an incubator, a compartmented chamber having separate tilting racks provided with egg-trays having air passages in their bottoms, flexible enclosing means for said racks, and means to produce a forced circulation of heated air through said enclosed racks and the egg-trays therein.

~~15.~~ ~~24.~~ In an incubator, a closed chamber having a central corridor provided with an air-distributing space in its upper portion and a power-driven fan in said space, curtains at each side of said corridor, separate stationary and tilting racks behind said curtains, egg-trays having open-mesh bottoms removably mounted upon said racks, and means to heat the air circulated through said chamber.

25. The method of hatching eggs by arranging the eggs in a column one above the other and forcing heated air through said column.

26. In an incubator changeable supporting means whereby eggs arranged in tiers one above the other may be changed in position sufficient to incubate.

27. In an incubator changeable supporting means whereby eggs arranged in tiers one above the other may be changed in position sufficient to incubate in a current of heated air forced through said tier and thermostatic means for controlling the temperature of said air.

28. In an incubator changeable supporting means whereby eggs arranged in tiers one above the other may be changed in position sufficient to incubate and thermostatic means for controlling the temperature of said eggs.

In Testimony Whereof, I have hereunto set my hand this 20th day of October 1916.

WITNESSES:

Hannah Plain. } Samuel B Smith
(Two witnesses sign here) Ida M. Smith } (Inventor sign here first name in full)

OATH

State of Ohio }
County of Clark } ss:

Samuel B. Smith

the above named petitioner, being duly sworn deposes and says that he is a citizen of the United States of America and resident of Cleveland, Cuyahoga County, Ohio; that he verily believes himself to be the original, first, and sole inventor of the improvement in

INCUBATORS

described and claimed in the annexed specification; that he does not know and does not believe that the same was ever known or used before his invention or discovery thereof, or patented or described in any printed publication in any country before his invention or discovery thereof, or more than two years prior to this application, or in public use or on sale in the United States for more than two years prior to this application; and that no application for patent on said improvement has been filed by him or his representatives or assigns in any country foreign to the United States.

Samuel B Smith

(Inventor sign here first name in full)

day of October 1916.

WITNESSES:

Hannah Plair. | Samuel B Smith

(Two witnesses sign here) Ida M. Smith | (Inventor sign here first name in full)

OATH

State of Ohio)
) ss:
County of Clark)

Samuel B. Smith

the above named petitioner , being duly sworn deposes and says that he is a citizen of the United States of America and resident of Cleveland, Cuyahoga County, Ohio; that he verily believes himself to be the original, first, and sole inventor of the improvement in

INCUBATORS

described and claimed in the annexed specification; that he does not know and does not believe that the same was ever known or used before his invention or discovery thereof, or patented or described in any printed publication in any country before his invention or discovery thereof, or more than two years prior to this application, or in public use or on sale in the United States for more than two years prior to this application; and that no application for patent on said improvement has been filed by him or his representatives or assigns in any country foreign to the United States.

Samuel B Smith

(Inventor sign here first name in full)

Sworn to and subscribed before me this 20th day of October 1916.

Guy E. M. Floyd

NOTARY PUBLIC.

873

Div. 38 Room 378 CDH 2-260 LDH

Address only "The Commissioner of Patents, Washington, D. C.," and not any official by name.

Paper No. 2

All communications respecting this application should give the serial number, date of filing, title of invention, and name of the applicant.

DEPARTMENT OF THE INTERIOR

UNITED STATES PATENT OFFICE

WASHINGTON Nov. 1, 1916.

Staley & Bowman,

Gotwald Bldg.,

Springfield, O.

Please find below a communication from the ***EXAMINER*** *in charge of the application of*

Samuel B. Smith, Ser. No. 127,915, filed Oct. 26, 1916: Incubators.

Thomas Ewing
Commissioner of Patents.

6—2631

Claims 1, 25 and 26 are rejected on each of

428

Morgan, 272,744, Feb. 20, 1883,
Class 119/40,
Winkler, 286,756, Oct. 16, 1883,
Class 119/35,
Bassini et al., 330,457, Nov. 17, 1885,
Class 119/42,
Campbell, 344,474, June 29, 1886,
X-ref. in same class,
Boyd, 828,181, Aug. 7, 1906
Class 119/35,
VanKeuren, 1,160,793, Nov. 16, 1915,
Class 119/40, and the

German patents to

Mann, 117,089, Feb. 4, 1901,
Class 119/42, 1 sheet, and
Stulik, 155,917, Nov. 11, 1904,
Class 119/35, 1 sheet.

The references show the "column". The air is "forced" by the arrangement of the heating means which causes the heated air to rise and thus produces a circulation of air. The last two lines of Claim 1 are vague.

Claims 2, 3 and 4 are [illegible]

Staley & Bowman,

Gotwald Bldg.,

Springfield, O.

Please find below a communication from the ***EXAMINER*** *in charge of the application of*

Samuel B. Smith, Ser. No. 127,915, filed Oct. 26, 1916: Incubators.

Thomas Ewing
Commissioner of Patents.

c 6—2931

Claims 1, 25 and 26 are rejected on each of

428

Morgan, 272,744, Feb. 20, 1883,
Class 119/40,
Winkler, 286,756, Oct. 16, 1883,
Class 119/35,
Bassini et al., 330,457, Nov. 17, 1885,
Class 119/42,
Campbell, 344,474, June 29, 1886,
X-ref. in same class,
Boyd, 829,181, Aug. 7, 1906
Class 119/35,
VanKeuren, 1,160,793, Nov. 16, 1915,
Class 119/40, and the

German patents to

Mann, 117,089, Feb. 4, 1901,
Class 119/42, 1 sheet, and
Stulik, 155,917, Nov. 11, 1904,
Class 119/35, 1 sheet.

The references show the "column". The air is "forced" by the arrangement of the heating means which causes the heated air to rise and thus produces a circulation of air. The last two lines of Claim 1 are vague.

Claims 2, 3 and 4 are rejected on Stulik suggesting arranging the eggs in different places in the column at different periods of incubation in view of

Perkins, 745,458, Dec. 1, 1903,
Class 119/37, suggesting inclining some of the egg trays.

127915
13

Claims 5. 8 and 13 are rejected on Stulik in view of each of

Conant, 297,676, April 29, 1884,
X-ref. in Class 119/44, and
Christianson, 559,676, May 5, 1896,
X-ref. in same class, suggesting the racks, and of

Goldstein, 1,137,752, May 4, 1915,
X-ref. in Class 119/35 (see 12), suggesting the fan which otherwise does not involve invention as it is common to use such a fan to produce a circulation of air wherever desired.

Claims 6 and 7 are rejected on Stulik in view of Goldstein.

Claim 9 is rejected on Stulik in view of Goldstein and Christianson.

In Claim 10, line 4, what does "equalizing" mean? Claim 10 is otherwise allowed.

In Claim 11, line 5, before "foul" insert - and exit of - Claim 11 is rejected in the same manner as Claim 5 in view of each of

Morgan, 591,870, Oct. 19, 1897,
Class 119/42, and
Klinke, 949,653, Feb. 15, 1910,
Same class, suggesting the means to regulate.

Claim 12 is rejected on Stulik in view of Goldstein, of

Olson, 1,100,146, June 16, 1914,
X-ref. in Class 119/40, (see 4), suggesting the "means to supply vapor" and of

Christianson, 559,676, May 5, 1896,
X-ref. in same class, suggesting the racks, and of

Goldstein, 1,137,752, May 4, 1915,
X-ref. in Class 119/35 (see 12), suggesting the fan which otherwise does not involve invention as it is common to use such a fan to produce a circulation of air wherever desired.

Claims 6 and 7 are rejected on Stulik in view of Goldstein.

Claim 9 is rejected on Stulik in view of Goldstein and Christianson.

In Claim 10, line 4, what does "equalizing" mean? Claim 10 is otherwise allowed.

In Claim 11, line 5, before "foul" insert - and exit of - Claim 11 is rejected in the same manner as Claim 5 in view of each of

Morgan, 591,870, Oct. 19, 1897,
Class 119/42, and
Klinke, 949,653, Feb. 15, 1910,
Same class, suggesting the means to regulate.

Claim 12 is rejected on Stulik in view of Goldstein, of

Olson, 1,100,146, June 16, 1914,
X-ref. in Class 119/40, (see 4), suggesting the "means to supply vapor" and of

Bell, 691,837, Jan. 28, 1902,
Class 119/39, suggesting the "rack".

Claim 14 is rejected on Stulik in view of Goldstein and of Christianson suggesting mounting some of the egg trays on tilting racks.

127915
14

Claims 15 and 16 are rejected on Stulik in view of Goldstein suggesting the fan, the second compartment and the continuous circulation. In Claim 16 the substituting of the curtain for the vertical partition does not involve invention.

Claim 17 is rejected on Goldstein in view of Van Keuren suggesting using the "corridor" of Goldstein(the space in which 11 is) to heat two chambers on each side, and of Bell, suggesting putting racks and trays in the side compartments. This gives the equivalent of the structure claimed.

In Claim 18, line 1, - closed - is misspelled. Lines 4 and 5, what is it that is "adapted to circulate air"?

Claim 18 is rejected on Campbell in view of Goldstein suggesting the "compartment" and "fan" to produce a continuous circulation of air. The specific mounting of the fan does not involve invention.

In Claim 19, line 4, what is the "means to produce conflux"? Claims 19 and 20, as far as understood, are rejected on Van Keuren.

In Claim 20, line 5, what is the "means to produce conflux"?

Claims 21 and 23 are rejected on VanKeuren in view of Goldstein and Christianson. This gives the equivalent of the structure claimed.

Claim 22 is rejected on Stulik in view of Goldstein suggesting the fan, of Van Keuren, suggesting the compartmented chamber and of Christianson, suggesting making some of the trays tilt.

curtain for the vertical partition does not involve invention.

Claim 17 is rejected on Goldstein in view of Van Keuren suggesting using the "corridor" of Goldstein(the space in which 11 is) to heat two chambers on each side, and of Bell, suggesting putting racks and trays in the side compartments. This gives the equivalent of the structure claimed.

In Claim 18, line 1, - closed - is misspelled. Lines 4 and 5, what is it that is "adapted to circulate air"?

Claim 18 is rejected on Campbell in view of Goldstein suggesting the "compartment" and "fan" to produce a continuous circulation of air. The specific mounting of the fan does not involve invention.

In Claim 19, line 4, what is the "means to produce conflux"? Claims 19 and 20, as far as understood, are rejected on Van Keuren.

In Claim 20, line 5, what is the "means to produce conflux"?

Claims 21 and 23 are rejected on VanKeuren in view of Goldstein and Christianson. This gives the equivalent of the structure claimed.

Claim 22 is rejected on Stulik in view of Goldstein suggesting the fan, of Van Keuren, suggesting the compartmented chamber and of Christianson, suggesting making some of the trays tilt.

Claim 24 is allowed.

Claims 27 and 28 are rejected on each of Morgan, Bassini et al., Campbell, Boyd and Stulik.

CDH

M K Peck
actg Exr

127915 - 15

MAIL ROOM
MAR 8
917
PATENT OFFICE

Div. 38, Room 378,

Ser. No. 127,915,

Filed October 26, 1916.

Incubators.

Samuel B. Smith.

Commissioner of Patents,

Sir:--

Amend the above application as follows:

Page 1, line 8 for the words "between 98° and 106°" substitute between 100° and 105°; line 22 change "106°" to 105°; line 24 after the word "eggs" insert the following: The temperature of circulating air should be such as will prevent the eggs in the early stage of incubation from falling below 100° and the speed or velocity of the circulating air should be such as to carry the heat away from the eggs in the later stage of incubation and thereby hold the temperature of those eggs at 105° or slightly below that. It is manifest that the temperature will remain practically the same throughout the column of eggs, but the air is impelled with sufficient velocity to carry the heat away from the eggs which happen to be in the advanced stage of incubation.

Page 5, line 9 change "98° and 106°" to read 100° and 105°.

Claim 1, line 2 change "forced" to impelled.

Claim 2, line 2 and Claim 3 line 2 [illegible]

Filed October 26, 1916.

Incubators.

Samuel E. Smith.

Commissioner of Patents,

Sir:--

Amend the above application as follows:

Page 1, line 8 for the words "between 98° and 106°" substitute between 100° and 105°; line 22 change "106°" to 105°; line 24 after the word "eggs" insert the following: The temperature of circulating air should be such as will prevent the eggs in the early stage of incubation from falling below 100° and the speed or velocity of the circulating air should be such as to carry the heat away from the eggs in the later stage of incubation and thereby hold the temperature of those eggs at 105° or slightly below that. It is manifest that the temperature will remain practically the same throughout the column of eggs, but the air is impelled with sufficient velocity to carry the heat away from the eggs which happen to be in the advancedstage of incubation.

A'

Page 5, line 9 change 98° and 106° to read 100° and 105°.

Claim 1, line 2 change "forced" to impelled.

Claim 2, line 2 and claim 3 line 2 before "about" insert the words through and.

Claim 18, line 1 correct the spelling of closed before the word "chamber"; line 5 erase all of the line and insert therefor to cause the air to circulate through the trays.

As to claims 19 and 20 means for causing the con-

flux of air currents are the flexible strips of fabric which are fully described at page 4 near the bottom thereof.

It is urged that the claims are now clear of criticisms as to form and that same represent patentable subject matter over the references.

As to claim 1 it must now be apparent that the novel method employed by applicant consists in arranging the eggs in columns and then using artificial means for impelling the air with sufficient velocity to keep the eggs in the advanced stage of incubation from becoming over-heated. The office says the last two lines of claim 1 are vague, but applicant urges that when read in the light of the specification and disclosure those lines are perfectly clear and bring out the fact that the heated air is impelled or driven so that it is adapted to the eggs in various stages of incubation. As explained in the specification, eggs near the top of the column are kept from falling below the temperature of 100° and the eggs near the bottom of the column are kept from rising materially above 105°. In other words the heated air is adapted to the condition of the eggs at the top of the column and at the bottom.

Now applicant notes that the Patent Office cites a reference to Goldstein, which does show the use of driven or impelled air in curing cigars, but certainly there is no such method suggested as employed by applicant wherein he puts articles, such as eggs, in columns and then drives the air through the column in such manner that it will produce desirable results with the articles in various stages of incubation. Applicant was not merely trying to dry or cure the eggs. He was struggling with the problem of dealing with a

items as to form and that same represent patentable subject matter over the references.

As to claim 1 it must now be apparent that the novel method employed by applicant consists in arranging the eggs in columns and then using artificial means for impelling the air with sufficient velocity to keep the eggs in the advanced stage of incubation from becoming over-heated. The office says the last two lines of claim 1 are vague, but applicant urges that when read in the light of the specification and disclosure those lines are perfectly clear and bring out the fact that the heated air is impelled or driven so that it is adapted to the eggs in various stages of incubation. As explained in the specification, eggs near the top of the column are kept from falling below the temperature of 100° and the eggs near the bottom of the column are kept from rising materially above 105°. In other words the heated air is adapted to the condition of the eggs at the top of the column and at the bottom.

Now applicant notes that the Patent Office cites a reference to Goldstein, which does show the use of driven or impelled air in curing cigars, but certainly there is no such method suggested as employed by applicant wherein he puts articles, such as eggs, in columns and then drives the air through the column in such manner that it will produce desirable results with the articles in various stages of incubation. Applicant was not merely trying to dry or cure the eggs. He was struggling with the problem of dealing with a very peculiar form of article which had within it animal life and in devising a way to apply a forced draft of heated air through such perplexing articles as eggs is certainly meritious. There is absolutely nothing in the use of impelled air with cigars which would in anyway suggest to one that it would be

of any advantage in incubating eggs.

There are a number of the claims wherein the Office overlooks the distinguishing feature of having the impelled air go through and about the individual eggs at one point in the column and at another and different point have the current of air driven about the container or trays.

Claim 6 illustrates the invention of applicant as contradistinguished from the use of a draft of air for drying or aging cigars. In that claim it appears that the eggs are arranged in tiers and the air is caused to circulate through the trays which contain the eggs in the last stages of incubation.

For the purpose of drying out or aging cigars it is apparent that there would be no necessity or advantage in driving the air through the container holding the cigars. It would be entirely sufficient to have the air circulate around the cigar containers. In fact in most cases there is simply moisture administered to the cigar container.

With the foregoing explanation it is believed that the Office will recognize the advantage brought about by applicant's invention and will allow the claims over the references.

It is therefore, urged that the claims should be allowed.

Respectfully submitted,

SAMUEL B. SMITH.

By his attorneys,

Staley & Brosman

Springfield, Ohio.
March 3, 1917.
BB/S.

Div. 38 Room 378 CDH 2-160 LDH Paper No. 4

Address only "The Commissioner of Patents, Washington, D. C.," and not any official by name.

All communications respecting this application should give the serial number, date of filing, title of invention, and name of the applicant.

DEPARTMENT OF THE INTERIOR

UNITED STATES PATENT OFFICE

WASHINGTON March 24, 1917.

Staley & Bowman,

Gotwald Bldg.,

Springfield, O.

Please find below a communication from the EXAMINER in charge of the application of

Samuel B. Smith, Ser. No. 127,915, filed Oct. 26, 1916: Incubator.

Thomas Ewing
Commissioner of Patents.

In response to the communication filed Mar. 6, 1917:

Claim 1 is rejected on each of Bassini et al., Campbell, Bell, and Boyd, suggesting eggs in a column and heated air that rises and passes around them, in view of each of

Endemann, 120,253, Oct. 24, 1871,
Class 34/39,
Jones, 152,644, June 30, 1874,
Same class, and
Verna, 891,019, June 16, 1908,
Same class (see 5 and 6), suggesting

the "impelling" the air. The last two lines do not state clearly that eggs of various stages are put in the columns. Moreover, it would involve no invention to put eggs of various stages into the column unless it is stated that eggs of different stages are ar-

WASHINGTON

Staley & Bowman,

Gotwald Bldg.,

Springfield, O.

Please find below a communication from the EXAMINER in charge of the application of

Samuel B. Smith, Ser. No. 127,915, filed Oct. 26, 1916: Incubator.

Thomas Ewing
Commissioner of Pat.

In response to the communication filed Mar. 6, 1917:

Claim 1 is rejected on each of Bassini et al., Campbell, Bell, and Boyd, suggesting eggs in a column and heated air that rises and passes around them, in view of each of

Endemann, 120,253, Oct. 24, 1871,
Class 34/39,
Jones, 152,644, June 30, 1874,
Same class, and
Verna, 891,019, June 16, 1908,
Same class (see 5 and 6), suggesting

the "impelling" the air. The last two lines do not state clearly that eggs of various stages are put in the columns. Moreover, it would involve no invention to put eggs of various stages into the column unless it is stated that eggs of different stages are arranged at different levels in the column. In the incubator references the heated air is "impelled" by its inferior density. The drier references suggest assisting this impelling force.

Claims 2 and 3 are rejected in the same manner as Claim 1 in view of Winkler, suggesting eggs of various stages of incubation arranged at different places in the column of air (in Winkler air comes in through k and goes out through the openings in A) and of Christianson, suggesting some eggs in inclined planes. This gives the process claimed as it would not be inconsistent with

the process disclosed in this claim to apply heat in the middle of the column of air.

Claim 4 is rejected in the same manner as Claim 3, omitting Christianson.

Claims 5, 6 and 7 are rejected in the same manner as Claim 1 and also on each of Endemann, Jones and Verna, showing all the structure claimed.

Claims 8 and 9 are rejected in the same manner as Clai 1 in view of Christianson.

The objections to Claims 10 and 11 are repeated.

Claim 10 is rejected on Christianson as far as understood. The suspending of the device does not distinguish from Christianson.

Claim 11, as far as correct, is rejected in the same manner as Claim 5, in view of each of Morgan and Klinke. Moreover, it is rejected in the same manner as Claim 5 as the "means to regulate" need include nothing more than hand operated cutoffs which it involves no invention generally to put anywhere. In Claim 11, line 4, "uniformly" is incorrect. It can not mean that the effect on the eggs is uniform since the air cools the eggs in the lower trays (see page 4, lines 15 to 16), while it heats the upper eggs. The temperature of the air is not the same throughout the column, since the temperature is raised by the lower trays of eggs and diminished by the upper, so that the temperature is higher part way up the tier at either the top or the bottom.

Claim 11 is further objected to as the structure which applicant intends to include by the phrase "means to heat uniformly" is already partly included by the fan and "means to operate".

Claim 12 is rejected on the same references as Claim 1 in view of Olson, of record

Claim 13 is rejected in the same manner as Claim 5.

In Claims 11 and 13 the trays of the references are supported by cleats which anticipate the "racks" as claimed. Racks to support trays are common generally and are shown moreover in Bell.

In Claim 14, line 5, what is the "space between the racks and tiers"? If these tiers are those numbered 12, they should be better defined in the claim. This claim can not be well understood in its present form but seems to be met by the same references as Claim 9.

Claim 15 is rejected on each of Bassini et al., Campbell, Bell and Boyd in view of each of Jones et al. and Verma, suggesting the continuous circulation and also on each of Jones et al. and Verma, alone.

Claim 16 is rejected in the same manner as Claim 15. The curtain is not patentably different from any partition.

Claim 17 is rejected as for an incomplete combination as it does not bring out the structure definitely enough to show that the fan circulates air through the compartments or that air from the compartments goes into the air distributing space. As far as this claim states, the curtain might make a tight closure between the corridor and the compartments or they might let air from the corridor to the compartments at the top thereof. When this claim is made sufficiently definite, it will probably be allowed.

Claim 18 is not understood. What is it that is "adapted to cause"?

Claim 18 is rejected in the same manner as Claim 5, the specific location of the fan not involving invention.

In Claim 19, line 4, and Claim 20, line 5, "means to produce conflux" is incorrect as the word "conflux" is defined by the standard dictionary to mean - "flowing together". There is no

"flowing together" at the bottom of the trays.

Claims 19 and 20 as far as correct are rejected in the same manner as Claim 15. Applicant has put drawers 6 in both compartments 4 and 5 of the Verna device. In these and other claims, to provide a plurality of compartments in the incubators would not involve invention even without its being suggested by Jones et al.,and Verna.

Claims 21, 22,23 and 24 are rejected in the same manner as Claim 8. The word "flexible" does not patentably distinguish Claims 21 and 23 from the references. To make some racks stationary and some tiltable as claimed does not involve invention unless it is stated that eggs are first put in the upper rack and moved down and that the air flows upward through the whole length of the racks and is not heated by additional heating means during its flow through the racks. Such amendments to Claim 22 are necessary to bring out the operation stated in the specification. In Claim 24 the arrangement of the "central corridor" and "air distributing space" does not involve invention. Claim 24 moreover does not state that the curtains permit any circulation of air from the corridor to the racks. This circulation of air should be included and defined.

Claim 25 is rejected in the same manner as Claim 1.

Claim 26 is rejected in the same manner as Claim 1 and also on each of Bassini et al., Campbell, Bell and Boyd alone. As far as this claims and Claims 27 and 28 disclose,eggs of various stages of incubation might be mingled in the same tray.

Claims 27 and 28 are rejected in the same manner as Claim 1. The "thermostatic means" is common in all incubators as shown in almost all the references of record.

"blowing together" at the bottom of the trays.

Claims 19 and 20 as far as correct are rejected in the same manner as Claim 15. Applicant has put drawers 6 in both compartments 4 and 5 of the Verna device. In these and other claims, to provide a plurality of compartments in the incubators would not involve invention even without its being suggested by Jones et al.,and Verna.

Claims 21, 22,23 and 24 are rejected in the same manner as Claim 8. The word "flexible" does not patentably distinguish Claims 21 and 23 from the references. To make some racks stationary and some tiltable as claimed does not involve invention unless it is stated that eggs are first put in the upper rack and moved down and that the air flows upward through the whole length of the racks and is not heated by additional heating means during its flow through the racks. Such amendments to Claim 22 are necessary to bring out the operation stated in the specification. In Claim 24 the arrangement of the "central corridor" and "air distributing space" does not involve invention. Claim 24 moreover does not state that the curtains permit any circulation of air from the corridor to the racks. This circulation of air should be included and defined.

Claim 25 is rejected in the same manner as Claim 1.

Claim 26 is rejected in the same manner as Claim 1 and also on each of Bassini et al., Campbell, Bell and Boyd alone. As far as this claims and Claims 27 and 28 disclose,eggs of various stages of incubation might be mingled in the same tray.

Claims 27 and 28 are rejected in the same manner as Claim 1. The "thermostatic means" is common in all incubators as shown in almost all the references of record.

As the references indicate, applicant has new matter in his application, but has not limited his claims sufficiently to bring it out.

CDH

G. A. Ide, Exr.

Div. 38 Room 378

Ser. No. 127,915

Filed October 26th, 1916

INCUBATOR

S. B. Smith.

Commissioner of Patents,

Sir:-

Amend the application as follows:-

Claim 1 line 2 after the first word in the line insert the words of various stages of incubation; same line after "column" insert the eggs in different stages of incubation being in different levels.

Claim 2 line 3 after "eggs" (first word in the line) insert the words the air being impelled from the bottom upwardly; line 4 erase "at one place in" and insert the words at the upper part of.

Claim 3 line 3 after "eggs" (first time mentioned) insert the words the air being impelled upwardly throughout the column of eggs.

Claim 4 line 3 after "same" insert the words from the bottom of said column upwardly toward the top thereof.

Claim 5 line 3 after the word "trays" insert the words the said fan being arranged to force the air from the bottom of the chamber upwardly around the trays to the top thereof.

Claim 6 line 2 after "tiers" insert the words eggs at various stages of incubation; after the word "incubation" line 4 insert the words consisting of a fan arranged at the top of the

Div. 38 Room 378

Ser. No. 127,915

Filed October 26th, 1916

INCUBATOR

S. B. Smith.

Commissioner of Patents,

Sir:-

Amend the application as follows:-

Claim 1 line 2 after the first word in the line insert the words of various stages of incubation; same line after "column" insert the eggs in different steges of incubation being in different levels.

B Pur C

Claim 2 line 3 after "eggs" (first word in the line) insert the words the air being impelled from the bottom upwardly; line 4 erase "at one place in" and insert the words at the upper part of.

Claim 3 line 3 after "eggs" (first time mentioned) insert the words the air being impelled upwardly throughout the column of eggs.

Claim 4 line 3 after "same" insert the words from the bottom of said column upwardly toward the top thereof.

Claim 5 line 3 after the word "trays" insert the words the said fan being arranged to force the air from the bottom of the chamber upwardly around the trays to the top thereof.

B' Pur C

Claim 6 line 2 after "tiers" insert the words eggs at various stages of incubation; after the word "incubation" line 4 insert the words consisting of a fan arranged at the top of the chamber and arranged to impel the air from a point at the bottom of the trays to a point at the top thereof.

B³ Pur C

Claim 7 line 4 insert after "trays" an air passage-way near the bottom of the trays whereby the air will be impelled from the bottom of the tier of trays to the top thereof.

B⁴ Pur C

Claim 8 line 4 after "rack" insert the words said circulating means consisting of mechanically operated device arranged at the top of the column for impelling the air downwardly and a passageway at the bottom of the column for impelling the air from the bottom of the chamber towards said tilting rack and thereafter upwardly.

Claim 9 line 4 after the word "positions" insert the words said circulating means comprising aprons for causing the air to circulate from the bottom of the chamber upwardly.

Claim 10 line 6 after "positions" insert the words and means for impelling the air to circulate from the bottom of the incubator upwardly through said racks.

Claim 11 line 2 after the word "air" insert the words from the bottom of the chamber; line 4 erase the word "uniformly" and insert the words in accordance with the particular stage of incubation of the eggs; after "chamber " same line insert consisting in part of passageways near the bottom of the chamber.

Erase claims 13, 14, 15 and 16.

Claim 17 line 4 after the word "space" insert the words an air passageway near the bottom of said chamber for impelling the air within the compartments whereby it will circulate upwardly.

Claim 18 line 3 after "egg-trays" insert having therein eggs in various stages of incubation; line 4 erase the words " having open communication "down to and including the end of the claim and insert therefore an air passageway located near the bottom of said tiers of trays and communicating with said fan compartment whereby the air will be impelled by the fan to circulate from the bottom of the tier of trays to the top thereof..

Erase claims 19, 20, 21, 22, 23, 25, 26, 27 and 28.

Claim 24 line 4 after the word "corridor" insert

B5 said circulating means consisting of mechanically operated device arranged at the top of the column for impelling the air downwardly and a passageway at the bottom of the column for impelling the air from the bottom of the chamber towards said tilting rack and thereafter upwardly.

Claim 9 line 4 after the word "positions" insert the words said circulating means comprising aprons for causing the air to circulate from the bottom of the chamber upwardly.

Claim 10 line 6 after "positions" insert the words and means for impelling the air to circulate from the bottom of the incubator upwardly through said racks.

Claim 11 line 2 after the word "air" insert the words from the bottom of the chamber; line 4 erase the word "uniformly" and insert the words in accordance with the particular stage of incubation of the eggs; after "chamber " same line insert consisting in part of passageways near the bottom of the chamber.

Erase claims 13, 14, 15 and 16.

Claim 17 line 4 after the word "space" insert the words an air passageway near the bottom of said chamber for impelling the air within the compartments whereby it will circulate upwardly.

Claim 18 line 3 after "egg-trays" insert having therein eggs in various stages of incubation; line 4 erase the words "having open communication "down to and including the end of the claim and insert therefore an air passageway located near the bottom of said tiers of trays and communicating with said fan compartment whereby the air will be impelled by the fan to circulate from the bottom of the tier of trays to the top thereof..

Erase claims 19, 20, 21, 22, 23, 25, 26, 27 and 28.

Claim 24 line 4 after the word "corridor" insert the words arranged to permit the air to circulate from the bottom of the chamber into the part of the chamber behind the curtains.

It is urged that the claims are now corrected to being out the invention disclosed by applicant and it is urged that the same should be allowed.

Respectfully submitted

SAMUEL B. SMITH

By his attorneys,

Staley & Bowman

Springfield, Ohio.

April 5th, 1917.

BB/AB

26

Div. 38 Room 378 CDH LDH Paper No. 6 899

Address only "The Commissioner of Patents, Washington, D. C.," and not any official by name.

All communications respecting this application should give the serial number, date of filing, title of invention, and name of the applicant.

DEPARTMENT OF THE INTERIOR

UNITED STATES PATENT OFFICE

WASHINGTON April 12, 1917.

Staley & Bowman,

Gotwald Bldg.,

Springfield, O.

Please find below a communication from the EXAMINER in charge of the application of

Samuel B. Smith, Ser. No. 127,915, filed Oct. 26, 1916: Incubators.

Thomas Ewing
Commissioner of Patents.

In response to the communication filed April 7, 1917:

Claims 1 and 4 are rejected on the same references as in the last office action, taken with Winkler, which suggests trays arranged with the newest at top and oldest at bottom but with heaters in the middle of the column. This would give the method claimed.

Claims 2 and 3 are rejected in the same manner as Claim 1 in view of Christianson.

Claim 5 is rejected on each of Bassini et al., Campbell, Bell and Boyd in view of each of Endermann, Jones and Verna, showing the fan.

Claims 6 and 7 are rejected in the same eanner as Claim 1 and also in the same manner as Claim 5. The specific location of the fan does not involve invention.

Claims 8 and 10 are rejected in the same manner as Claim 6 in view of Christianson.

Staley & Bowman,

Gotwald Bldg.,

Springfield, O.

Please find below a communication from the **EXAMINER** *in charge of the application of*

Samuel B. Smith, Ser. No. 127,915, filed Oct. 26, 1916: Incubators.

Thomas Ewing
Commissioner of Patents.

In response to the communication filed April 7, 1917:

Claims 1 and 4 are rejected on the same references as in the last office action, taken with Winkler, which suggests trays arranged with the newest at top and oldest at bottom but with heaters in the middle of the column. This would give the method claimed.

Claims 2 and 3 are rejected in the same manner as Claim 1 in view of Christianson.

Claim 5 is rejected on each of Bassini et al., Campbell, Bell and Boyd in view of each of Endermann, Jones and Verna, showing the fan.

Claims 6 and 7 are rejected in the same eanner as Claim 1 and also in the same manner as Claim 5. The specific location of the fan does not involve invention.

Claims 8 and 10 are rejected in the same manner as Claim 6 in view of Christianson.

Claim 9 is objected to as the aprons do not cause the air to circulate upwardly unless they and the fan are more definitely located. Claim 9 is rejected in the same manner as Claim 8, omitting Endermann and Jones. Moreover, it is noticed

127915
26

that in Fig. 2 of Verna the partition at the right of 16 has the same function as applicant's "apron" and might be made of cloth instead of wood or metal.

In Claim 10,line 4, "equalizing" is not understood.

Claim 11 is rejected on the same references as Claim 1 in view of Morgan and Klinke showing "means to regulate" and also in the same manner as Claim 1 as the "means to regulate" involves no invention. The references from Class 34 show the fan and passageways. The phrase "means to heat the eggs in accordance with the particular stage of incubation of the eggs" is not very definite and is certainly shown in Winkler.

Claim 12 is rejected on the same references as Claim 5 in view of Olson, suggesting "means to supply".

Claim 13, original 17, should state that the air distributing space communicates with the corridor and the compartments, that there are two "air passageways" and that they connect the corridor with the compartments. When these, which applicant probably meant to include, have been included, this claim will probably be allowed.

Claim 14, original 18, is rejected in the same manner as Claim 6.

Claim 15, original 24, will probably be allowed if it is stated that the "air distributing space" communicates with both the corridor and the parts of the chambers behind the curtains.

Claim 11 is rejected on the same references as Claim 1 in view of Morgan and Klinke showing "means to regulate" and also in the same manner as Claim 1 as the "means to regulate" involves no invention. The references from Class 34 show the fan and passageways. The phrase "means to heat the eggs in accordance with the particular stage of incubation of the eggs" is not very definite and is certainly shown in Winkler.

Claim 12 is rejected on the same references as Claim 5 in view of Olson, suggesting "means to supply".

Claim 13, original 17, should state that the air distributing space communicates with the corridor and the compartments, that there are two "air passageways" and that they connect the corridor with the compartments. When these, which applicant probably meant to include, have been included, this claim will probably be allowed.

Claim 14, original 18, is rejected in the same manner as Claim 6.

Claim 15, original 24, will probably be allowed if it is stated that the "air distributing space" communicates with both the corridor and the parts of the chambers behind the curtains.

CDH

G. R. Lee,
Exr.

1279/5

27.

Div. 38, Room 378,

Ser. No. 127,915,

Filed October 26, 1916,

Incubators.

Samuel B. Smith.

Commissioner of Patents,

Sir:--

Erase the claims 1 to 12 16

and substitute the following:

1. The method of hatching eggs by arranging the eggs in various stages of incubation in a column, the eggs in different stages of incubation being in different levels, and applying heated air driven at a predetermined speed about the eggs whereby the heated air will be adapted to eggs in various stages of incubation.

2. The method of hatching eggs by arranging in one chamber eggs in various stages of incubation, the eggs in different stages of incubation being in different parts of said chamber, and applying heated air driven at a predetermined speed or velocity about all the eggs whereby the heated air will be adapted to eggs in various stages of incubation.

3. The method of hatching eggs, consisting of arranging eggs in various stages of incubation in an enclosure, the eggs in different stages of incubation being placed in different levels, and applying heated air to said eggs, said heat-

Ser. No. 127,915.

Filed October 26, 1916.

Incubators.

Samuel B. Smith.

Commissioner of Patents,

Sir:--

16

Erase the claims 1 to 12

and substitute the following:

1. The method of hatching eggs by arranging the eggs in various stages of incubation in a column, the eggs in different stages of incubation being in different levels, and applying heated air driven at a predetermined speed about the eggs whereby the heated air will be adapted to eggs in various stages of incubation.

2. The method of hatching eggs by arranging in one chamber eggs in various stages of incubation, the eggs in different stages of incubation being in different parts of said chamber, and applying heated air driven at a predetermined speed or velocity about all the eggs whereby the heated air will be adapted to eggs in various stages of incubation.

3. The method of hatching eggs, consisting of arranging eggs in various stages of incubation in an enclosure, the eggs in different stages of incubation being placed in different levels, and applying heated air to said eggs, said heated air being driven by mechanical means at a predetermined speed about the eggs to maintain same at a maximum degree of temperature of 105° and a minimum degree of 100°.

4. The method of hatching eggs by arranging eggs in

various stages of incubation in an enclosure and placing eggs in different stages of incubation in different places in the enclosure, and thereafter forcing heated air at a predetermined speed or velocity about all the eggs whereby the eggs in the most advanced stages of incubation will be maintained at a degree of temperature less than 105° by the velocity of heated air, substantially as specified.

5. The method of hatching eggs by arranging eggs in various stages of incubation in an enclosure andplacing the eggs in different stages of incubation in different places in the enclosure, and thereafter driving the heated air by mechanical means at a predetermined speed about all of the eggs and driving same through and between the eggs in the more advanced stage of incubation whereby the temperature of said eggs will be maintained at something less than 105° temperature, for the purpose specified.

6. The method of hatching eggs by arranging eggs in various stages of incubation in an enclosure and placing the eggs in different stages of incubation in different places in the enclosure, and thereafter driving the heated air by mechanical means at a predetermined speed about all of the eggs and driving same through and between the eggs in the more advanced stage of incubation whereby the temperature of said eggs will be maintained at something less than 105° temperature, said eggs in the more advanced stages of incubation being arranged in tilted position, for the purpose specified.

7. In an incubator, a chamber and trays for eggs arranged in tiers therein, means for applying heated air to said eggs, said circulating means comprising a mechanically operated device arranged at the top of the chamber for driving air downwardly and giving to said air a predetermined

speed or velocity whereby the eggs throughout the chamber will be maintained at a degree of temperature varying from 100° to 105°, the eggs in the more advanced stages of incubation being arranged at the point where the air is first applied to the eggs for the purpose specified.

Renumber claims 13 as No. 8 and at line 2 after the word "thereof" insert the following: a plurality of air passageways connecting said corridor with said compartments.

Erase claims 14

Claim 15, line 4 after the word " curtain" insert passageways connecting the air distributing space with the corridor and the parts of said chamber behind the curtains.

- - - - - -

It is urged that the claims as now presented are clear of the references and same should be allowed.

The method employed by applicant is distinctly different from the method employed in the references and the claims are now drawn particularly to a method of hatching eggs as contradistinguished from drying fruits or other articles. While it is true that in Winkler the eggs are in various stages of incubation and have heated air applied to them, there is no conception of applying the heated air with a predetermined speed or velocity that will adapt the heated air to the eggs in various stages of incubation. In Winkler's method there isn't any suggestion of giving heated air any predetermined speed or velocity. There is merely employed water jackets which heat the eggs and also the eggs move from place to place by means of carriers. It is obvious that the eggs in the advanced stages of incubation are not kept from advancing beyond the desirable temperature by the employment of any driving means for the heated air. The only mechanically operated mechanism in Winkler is the mechanism

for driving the eggs and that is distinctly different from applicant's conception which is that of driving the air in a way that will make it adapted to the eggs in all stages of incubation.

Now the references show the fans used for drying fruits, meats and similiar substances and do not in anyway suggest that there would be any advantage in using applicant's method of driving heated air with a predetermined velocity about the eggs that are in various stages of incubation. In drying fruits and meats it is merely necessary to have the air circulate about the fruits or means and that is the only purpose of using the fan whereas in applicant's method it is important to have the speed of the fan properly co-related to the heated eggs and by giving to the fan a predetermined velocity the eggs in the most advanced stages of incubation are prevented from becoming over heated.

It is believed that applicant has made a valuable contribution to the art of hatching eggs and he certainly does not claim to have attemplated anything in the art of drying fruits or meats and it is therefore urged that the claims should be allowed.

Respectfully submitted,

SAMUEL B. SMITH,

By his attorneys,

Blakely & Sokoloff

Springfield, Ohio.

April 20th, 1917.

BB/S.

Div. 38 Room 378 CDH ~~and~~ LDH Paper No. 8

Address only "The Commissioner of Patents, Washington, D. C.," and not any official by name.

All communications respecting this application should give the serial number, date of filing, title of invention, and name of the applicant

DEPARTMENT OF THE INTERIOR

UNITED STATES PATENT OFFICE

WASHINGTON May 3, 1917.

Staley & Bowman,

Gotwald Bldg.,

Springfield, O.

Please find below a communication from the EXAMINER in charge of the application of

Samuel B. Smith, Ser. No. 127,915, filed Oct. 26, 1916: Incubators.

Thomas Ewing

Commissioner of Patents.

In response to the communication filed April 23, 1917:

Claims 1 and 2 are rejected on each of Morgan, Perkins, Boyd and Stulik in view of Winkler. In each of the first four references the temperature of the heated air in the column is kept the same by the thermostat that controls the heater which drives the air, so that the speed of driving the air is predetermined by adjusting the thermostat. Winkler suggests the "eggs in different stages of incubation being in different levels".

Claims 3, 4 and 5 are rejected in the same manner as Claim 1 in view of each of Endemann, Jones et al., and Verna, suggesting the "mechanical means".

Claim 6 is rejected on Perkins in view of Winkler

Staley & Bowman,

Gotwald Bldg.,

Springfield, O.

my

Please find below a communication from the **EXAMINER** *in charge of the application of*

Samuel B. Smith, Ser. No. 127,915, filed Oct. 26, 1916: Incubators.

Thomas Ewing
Commissioner of Patents.

6—5631

In response to the communication filed April 23, 1917:

Claims 1 and 2 are rejected on each of Morgan, Perkins, Boyd and Stulik in view of Winkler. In each of the first four references the temperature of the heated air in the column is kept the same by the thermostat that controls the heater which drives the air, so that the speed of driving the air is predetermined by adjusting the thermostat. Winkler suggests the "eggs in different stages of incubation being in different levels".

Claims 3, 4 and 5 are rejected in the same manner as Claim 1 in view of each of Endemann, Jones et al., and Verna, suggesting the "mechanical means".

Claim 6 is rejected on Perkins in view of Winkler and the references from Claim 34 and of Perkins suggesting the tilting of some of the eggs.

Claim 7 is rejected in the same manner as Claim 3. Winkler anticipates the last three lines.

Claim 8, original 17, is objected to as the passageways upwards under the curtains are included twice, once in the amendment of April 23, and once in the amendment of April 7. This claim should be rewritten.

Claim 9, original 24, is allowed.

C.D.H.

G. R. Ide, Ex.

Div. 38 Room 378

Ser. No. 127,915

Filed October 26th, 1916.

INCUBATORS

Samuel B. Smith.

Commissioner of Patents,

Sir:-

Please recognize Percy Norton of Springfield Ohio as our associate in the further prosecution of the above entitled application.

Attorneys for Smith

34

Springfield, Ohio.

June 13th, 1917.

ClW/B

127.915 915

S PATENT OFFICE

Div. 38, Room 378,

Ser. No. 127,915,

Filed October 26th, 1916.

Incubators.

Samuel B. Smith.

Commissioner of Patents,

Sir:--

Amend the application as follows:

Erase claims 1 to 8 inclusive and insert the following:

1. The method of hatching a plurality of eggs in different stages of incubation by subjecting all of said eggs to heated air and by supplementing the natural draft of the heated air with the forced draft to increase the velocity of heated air about the eggs without changing the temperature of heated air whereby the units of heat will be carried from the eggs in the more advanced stage of incubation to those in a less advanced stage.

Sub. E2

2. The method of hatching a plurality of eggs in different stages of incubation by subjecting all of said eggs to heated air and by using a forced draft to increase the velocity of heated air without changing the temperature whereby the units of heat will be carried away from the

Div. 38, Room 376,

Ser. No. 127,915.

Filed October 26th, 1916.

Incubators.

Samuel B. Smith.

Commissioner of Patents,

Sir:--

Amend the application as follows:

Erase claims 1 to 8 inclusive and insert the following:

1. The method of hatching a plurality of eggs in different stages of incubation by subjecting all of said eggs to heated air and by supplementing the natural draft of the heated air with the forced draft to increase the velocity of heated air about the eggs without changing the temperature of heated air whereby the units of heat will be carried from the eggs in the more advanced stage of incubation to those in a less advanced stage.

Sub E²

2. The method of hatching a plurality of eggs in different stages of incubation by subjecting all of said eggs to heated air and by using a forced draft to increase the velocity of heated air without changing the temperature whereby the units of heat will be carried away from the eggs in the more advanced stage of incubation to these in a less advanced stage for the purpose specified.

3. The method of hatching a plurality of eggs in different stages of incubation by subjecting all of said eggs to heated air and by supplementing a draft produced by mechanical means to increase the velocity of the air

without increasing the temperature thereof whereby the units of heat will be carried from eggs in more advanced stage to those in the less advanced stage of incubation.

Renumber claim 9 making it claim 4.

- - - - - - -

Pursuant to the interview with the examiner on Thursday of last week the following argument is repeated in support of the three new claims now submitted. The common practice of incubation has been to assemble the eggs with a heater in close proximity overhead and as the eggs advance in incubation the heat or radiation is diminished or the eggs moved away from the heater as they advance in incubation. In attempting to hatch a plurality of eggs arranged in trays one above the other it has been found that no matter where the heater is placed when the natural draft is employed, the difference in temperature between the upper and lower parts of the egg chamber is so great as to destroy the eggs. A great many experiments havebeen made to provide a natural draft that would equalize the temperature, but the best that could be accomplished disclosed a difference of about fifteen degrees between the upper and lower part of the egg chamber, whereas when a forced draft was employed a substantially equal temperature was maintained throughout the chamber, showing that the essential feature of the invention is a forced draft and applicant seems to be the first to employ a forced draft.

The references from remote arts in which a forced draft is employed for drying meats, vegetables, fruits, tobacco, etc., afford no suggestion as to meeting the condition of the advancing incubation of eggs.

Applicant seems to be the first to discover this essential feature and it has produced a great and successful change in the art. Indeed it has revolutionized poultry industry for applicant has had in successful operation

operation for the year last past a large incubator hatching thousands of eggs by which he continuously hatches eggs in great quantities giving him an output of chicks which, by reason of the reduced equipment less space is required for it and fewer attendants to operate it, so vastly decreases the cost of production over the old method that he has been able to sell the chicks to Five and Ten Cent stores throughout the country at such prices that they can and do retail them at ten cents each.

It is therefore urged that the claims should now be allowed and an early allowance is respectfully urged.

Respectfully submitted,

SAMUEL B. SMITH.

By his attorneys,

Staley & Bowman

Springfield, Ohio,
June 26th, 1917.
BB/S.

Div. 38 Room 378 CDH 2-[illegible] LDH Paper No. 11

Address only "The Commissioner of Patents, Washington, D. C.," and not any official by name.

All communications respecting this application should give the serial number, date of filing, title of invention, and name of the applicant

DEPARTMENT OF THE INTERIOR

UNITED STATES PATENT OFFICE

WASHINGTON June 30, 1917.

Percy Norton,

Springfield,

O.

Please find below a communication from the EXAMINER in charge of the application of

Samuel B. Smith, Ser. No. 127,915, filed Oct. 26, 1916: Incubators.

Thomas Ewing

In response to the communication filed June 28, 1917:

In Claim 1, line 4, change the first "the" to - a -

Attention is called to Figs. 1 to 5, inclusive, and 7 of

Koons, 916,454, Mar. 30, 1909,
Class 119/40, in which, if the pipes 54 were omitted, there would be a "natural draft" around 12, through 8 and out of the egg chamber as indicated by the arrows in Fig.1. The use of the pipes 54 adds a "forced draft" that increases the speed of the air but does not heat the air in 1. To arrange the eggs on the trays so that the air will first strike the eggs in the more advanced stage and then those in the less advanced stage is suggested by Winkler.

Claims 1, 2 and 3 are rejected as explained and also on

Scott, 709,650, Sept. 23, 1902,
Class 119/40, having a "forced draft" produced by 22 in view of Winkler suggesting using a plurality of trays to produce the mode of operation in the last three lines. These claims are also rejected on Boyd in view of each of Scott

Percy Norton,

Springfield,

O.

Please find below a communication from the EXAMINER in charge of the application of

Samuel B. Smith, Ser. No. 127,915, filed Oct. 26, 1916: Incubators.

Thomas Ewing

r 6—2831

In response to the communication filed June 28, 1917:

In Claim 1, line 4, change the first "the" to - a -

Attention is called to Figs. 1 to 5, inclusive, and 7 of

Koons, 916,454, Mar. 30, 1909,
Class 119/40, in which, if the pipes 54 were omitted, there would be a "natural draft" around 12, through 8 and out of the egg chamber as indicated by the arrows in Fig.1. The use of the pipes 54 adds a "forced draft" that increases the speed of the air but does not heat the air in 1. To arrange the eggs on the trays so that the air will first strike the eggs in the more advanced stage and then those in the less advanced stage is suggested by Winkler.

Claims 1, 2 and 3 are rejected as explained and also on

Scott, 709,650, Sept. 23, 1902,
Class 119/40, having a "forced draft" produced by 22 in view of Winkler suggesting using a plurality of trays to produce the mode of operation in the last three lines. These claims are also rejected on Boyd in view of each of Scott and Koons suggesting connecting the part K of Boyd to the heater to get a forced draft and of Winkler, suggesting putting the more advanced eggs in the lower tray.

In Claim 3, "mechanical means" does not distinguish from

Ser. No. 127,915.....2.

the structure of the references. Even if it did, there would be no invention in a method claims, in substituting a fan for the draft forcing means of Koons and Scott.

Claim 4, original 24, stands allowed.

CDH

G. R. Lee,
Exr.

925

Affidavits & Exhibits

Div. 38 Room 378

Application No. 127,915

Filed October 26th, 1916.

INCUBATORS

Samuel B. Smith.

Commissioner of Patents,

Sir:-

Please amend the above entitled application as follows:-

Line 23, page 4 after "Fig. 3" insert The outlets 28 for the release of foul air are made of such restricted capacity as to prevent the undue escape of moisture. It is possible to limit the openings and so conserve the moisture by reason of the vitalizing effect of the power driven current upon the body of the air within the chamber.

E 1

Please place the numeral 28 with proper lead lines on Figs. 1 and 3 of the drawings to indicate outlets as per order sent herewith.

Substitute the following for claims 1, 2 and 3.

E 2

1. The method of hatching a plurality of eggs by arranging them at different levels in a closed chamber having restricted openings of sufficient capacity for the escape of foul air without undue loss of moisture and applying a current of heated air, said current being created by means other than variations of temperature and of sufficient velocity to circulate, diffuse and maintain the air throughout the chamber at substantially the same temperature, whereby the air will be vitalized, the moisture conserved and the

Application No. 127,915

Filed October 26th, 1916.

INCUBATORS

Samuel B. Smith.

Commissioner of Patents,

Sir:-

Please amend the above entitled application as follows:-

Line 23, page 4 after "Fig. 3" insert The outlets 28 for the release of foul air are made of such restricted capacity as to prevent the undue escape of moisture. It is possible to limit the openings and so conserve the moisture by reason of the vitalizing effect of the power driven current upon the body of the air within the chamber.

Please place the numeral 28 with proper lead lines on Figs. 1 and 3 of the drawings to indcate outlets as per order sent herewith.

Substitute the following for claims 1, 2 and 3.

1. The method of hatching a plurality of eggs by arranging them at different levels in a closed chamber having restricted openings of sufficient capacity for the escape of foul air without undue loss of moisture and applying a current of heated air, said current being created by means other than variations of temperature and of sufficient velocity to circulate, diffuse and maintain the air throughout the chamber at substantially the same temperature, whereby the air will be vitalized, the moisture conserved and the units of heat will be carried from the eggs in the more advanced stage of incubation to those in a less advanced stage for the purpose specified.

2. The method of hatching a plurality of eggs by arranging them at different levels in a closed chamber having restricted

openings of sufficient capacity for the escape of foul air without undue loss of moisture and applying a power driven current of heated air in an adjacent chamber through openings into the egg chamber, said current being of sufficient velocity to circulate, diffuse and maintain the air throughout the egg chamber at substantially the same temperature, whereby the air will be vitalized, the moisture conserved and the units of heat will be carried from the eggs in the more advanced stage of incubation to those in a less advanced stage for the purpose specified.

3. The method of hatching a plurality of eggs by arranging them at different levels in a closed chamber having restricted openings of sufficient capacity for the escape of foul air without undue loss of moisture and applying a vertically directed current of heated air in an adjacent chamber to circulate in said egg chamber through upper and lower openings between said chambers, said current being created by mechanically moving means of such velocity as to diffuse and maintain the air throughout the egg chamber at substantially the same temperature whereby the air will be vitalized, the moisture conserved and the units of heat will be carried from the eggs in the more advanced stage of incubation to those in the less advanced stage for the purpose specified. ale 3527

Please add the following claim:-

5. In an incubator, a closed chamber with a vertically disposed partition to provide a corridor having upper and lower passage ways to said chamber, egg trays arranged at different levels in said chamber, a power driven fan creating a current in said corridor to circulate through said passage ways and egg trays, said chamber having restricted openings of sufficient capacity for the discharge of foul air without undue loss of moisture and means to heat the air circulated through said chamber. (Orig. "

- - - -

Natural drafts seek and follow the same paths and when employed in incubators leave untouched areas of the egg chamber. This causes an uneven distributior of the heat and a variation of tempera-

ture that makes it impossible to successfully hatch eggs placed at different levels; and this is equally true of induced drafts caused by heating outlet pipes of the egg chamber. Convincing proof of this is found in the affidavit of George Cugley filed herewith.

Applicant by the introduction of a current produced by mechanical means distributes and diffuses the heat throughout the egg chamber and gives an even temperature in all parts of the chamber whereby it is possible to place the eggs at different levels; but this is not all; it is essential that a sufficient amount of moisture be retained for successful incubation and to that end the outlets for escape of foul air are restricted. The vitalizing effect of agitating the air within the chamber by a power driven current makes possible the use of restricted outlets and the moisture is thereby conserved within the chamber.

The induced drafts of the new references are for the purpose of freeing the incubator of foul air. Such drafts not only follow certain paths leaving areas of the chamber untouched as heretofore pointed out; but they entirely exhaust the moisture from the egg chamber and thereby destroy the hatch. There is a vast difference - just the difference that distinguishes success from failure - between the old art of natural and induced drafts and the power driven current of applicant with its restricted outlets giving a uniform temperature, vitalizing the air and conserving the moisture in the air within the egg chamber.

While it is true the egg conveyor of Winkler is arranged with one section above another he depends entirely on having a separate heater for each section adapted to the stage of incubation of the eggs in its section. Furthermore although his patent was issued as far back as 1883 his construction is not known on the market today showing it could not have been a success. It lacks the essential features that have made the device of applicant a success.

The so-called Mammoth Incubators of recent years are all made with the egg trays in the same horizontal plane. In other words, the old units are simply multiplied each having a

single tray, the combination making an incubator of great length, whereas by the method of applicant the egg trays can be placed in column allowing the incubator to be built in compact form, so that the material employed, cost of construction and space required is vastly less and the cost of fuel and attendants to operate is proportionately reduced.

Applicant's incubator is clearly distinguished in that a power driven current is employed to establish a uniform temperature throughout the area of the egg chamber whereby the eggs can be placed at different levels and the restricted outlets conserve the moisture in the chamber, this restriction and conservation being made possible by the vitalizing effect of the power driven current.

Applicant has discovered a new method of successfully hatching eggs continuously in large numbers and should be protected in it. An allowance is respectfully urged.

Respectfully,

SAMUEL B. SMITH

By his attorneys,

Springfield, Ohio.
February 9th, 1918.

Div. 38 Room 378

Appln. No. 127,915

Filed October 26th, 1916.

INCUBATORS

Samuel B. Smith

State of ~~Ohio~~ Pennsylvania, County of ~~Cuyahoga~~ Philadelphia, ss;

Samuel B. Smith being duly sworn deposes and says he is the applicant in the above entitled application; that the subject-matter of the foregoing amendment was part of his invention, was invented before he filed his original application, above identified, for such invention, was not known or used before his invention, was not patented or described in a printed publication in any country more than two years before his application, was not patented in a foreign country on an application filed more than twelve months before his application, was not in public use or on sale in this country for more than two years before the date of his application and has not been abandoned.

Samuel B Smith

Sworn to and subscribed before me this 14th day of February 1918.

Stella Irwin
Notary Public

9

State of Ohio,)
) SS
Clark County,)

George Cugley being first duly sworn says that he has been for many years engaged in the incubator business both as a dealer and manufacturer; that he is president of the Buckeye Incubator Company, of Springfield, Ohio, and gives his active personal attention to the conduct of the business including experimental work and the adopting of improvements in the product of said company; that said company has been engaged in the manufacture of incubators for 26 years and has constantly been engaged in making experiments with various types of incubators and that to his knowledge other manufacturers have been engaged in like manner; that it is a matter of common knowledge to those familiar with the art that to successfully hatch eggs they must be maintained at substantially the same temperature throughout the period of incubation; that all attempts to obtain a satisfactory hatch from eggs placed at different levels in a chamber having natural drafts or drafts induced by variation in temperature have been a failure for the reason that such drafts seek and follow the same paths leaving areas of the chamber untouched so that the same temperature cannot be maintained at different levels in the chamber; and as convincing proof of this affiant points to the fact that all manufacturers of incubators today, other than affiant's company which is building incubators in accordance with the device of applicant, place the eggs on the same level and this is true even in the so called Mammoth Incubator of recent years which simply multiply the units and place all the eggs of the several units on the same level.

Affiant further says that United States Letters Patent No.916454 granted V.C. Koons, March 30, 1909, having been called to his attention he constructed an incubator in accordance with the invention of said patent and conducted a series of experiments

with same; that he had photographs made of said incubator and the same are hereto attached marked Nos. 1, 2, 4 and 5 and further had a phantom drawing made which is hereto attached and marked No. 3; that No. 1 is an outside view, No. 2 is same with door open showing interior with three egg trays, No. 4 shows the position of the thermometers in each tray, No. 5 shows bottom of single tray with the position of the thermometers in said tray, the position of the thermometers being alike in each tray and No. 3 is a phantom view showing the heating device 1 with its heating drum 2 projecting into the heating chamber of the incubator, 3 is a water pan having openings 4 for escape of moisture, 5 are the egg trays, 6 are the fresh air inlets, 7 the air passages from the heating chamber to the egg chamber, and 8 the outlet tubes opening into a jacket 9 formed about the chimney of heater 1.

Affiant further says that during a period extending from September 19th to October 9, 1917, he operated said incubator making a series of tests, records of which are shown in Charts marked A, B, C, D. and E hereto attached by which it will be seen there was a wide variation of temperature both vertically and horizontally in the egg chamber showing that eggs could not be successfully hatched; and affiant particularly points out that in the test of September 21, 1917, marked "A" and the test of October 9, 1917, marked "E" were made with the outlet tubes removed, whereas the test of September 27, 1917, marked "B", September 29, 1917, marked "C" and October 3, 1917, marked "D" were made with the outlet tubes in place showing the induced drafts of the patent created a greater variation of temperature in the egg chamber which would be more disastrous to the hatch than when natural drafts were employed.

Affiant further says that moisture in the egg chamber is an essential element of a successful hatch and that an induced

draft created at the outlets by variations of temperature as provided in the Koons' construction would in his opinion so exhaust the moisture as to destroy the hatch.

George Cooley

Sworn to and subscribed before me this 22nd day of February 1918.

H. W. MacKinnon
Notary Public.

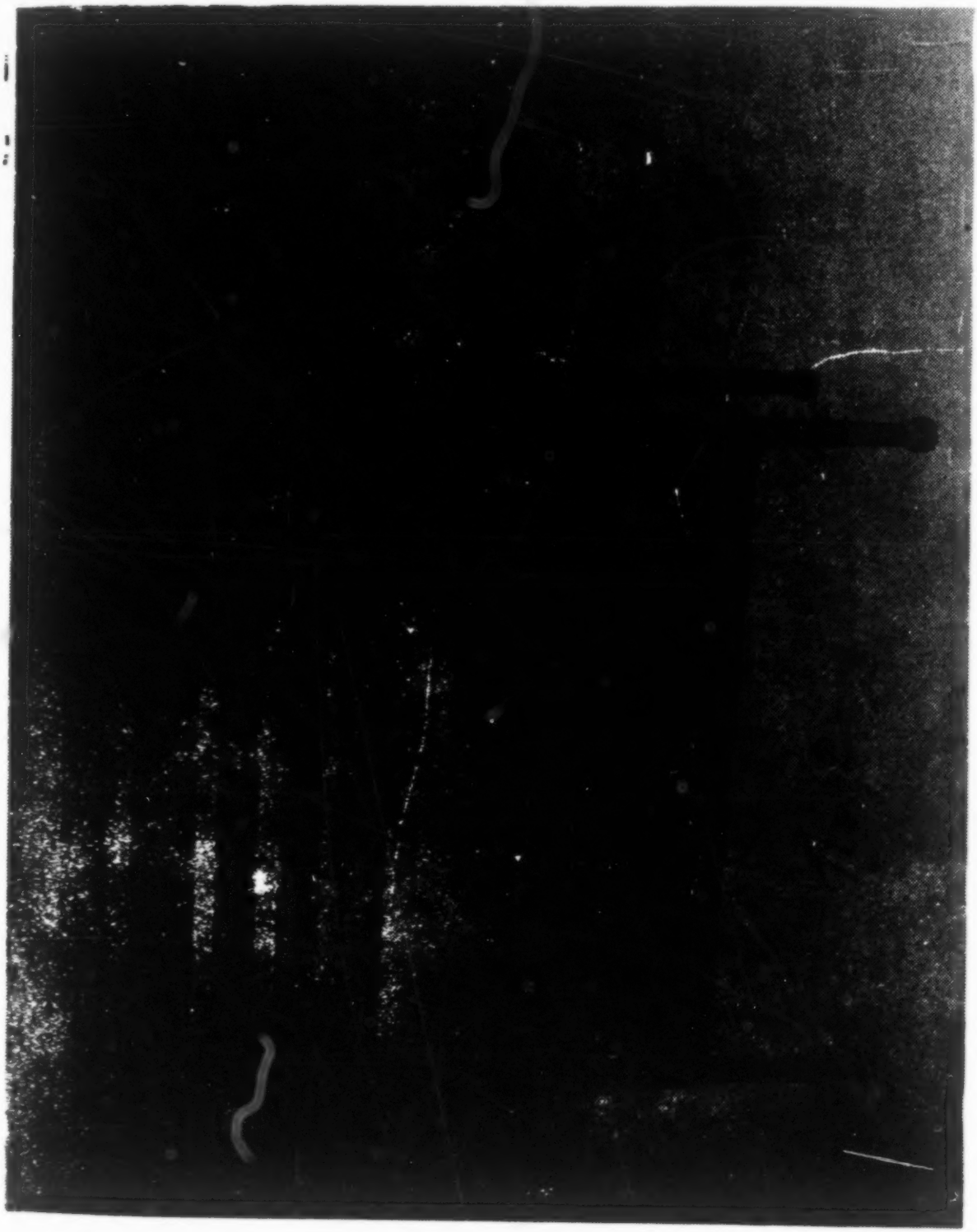

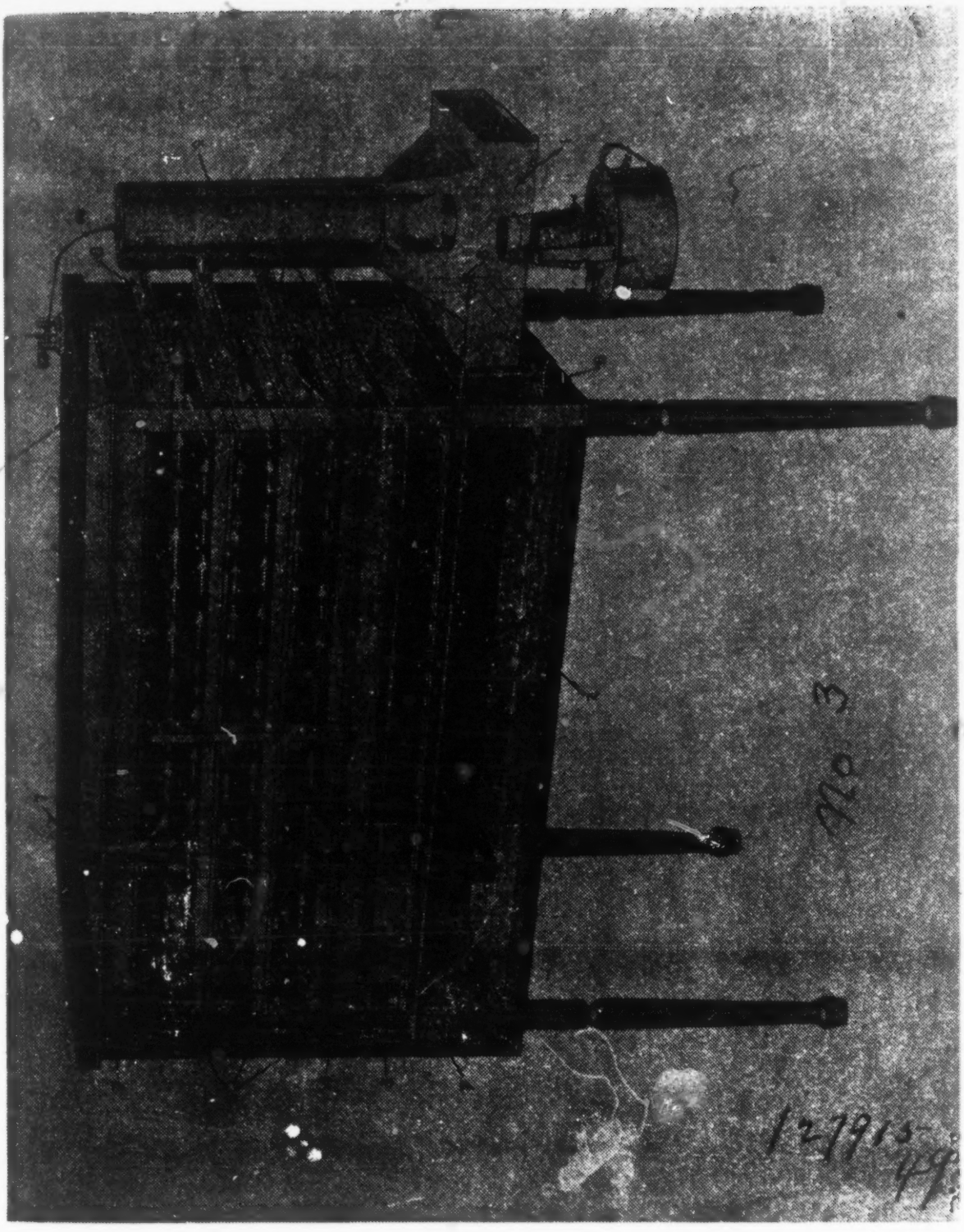
No 3
127915
49

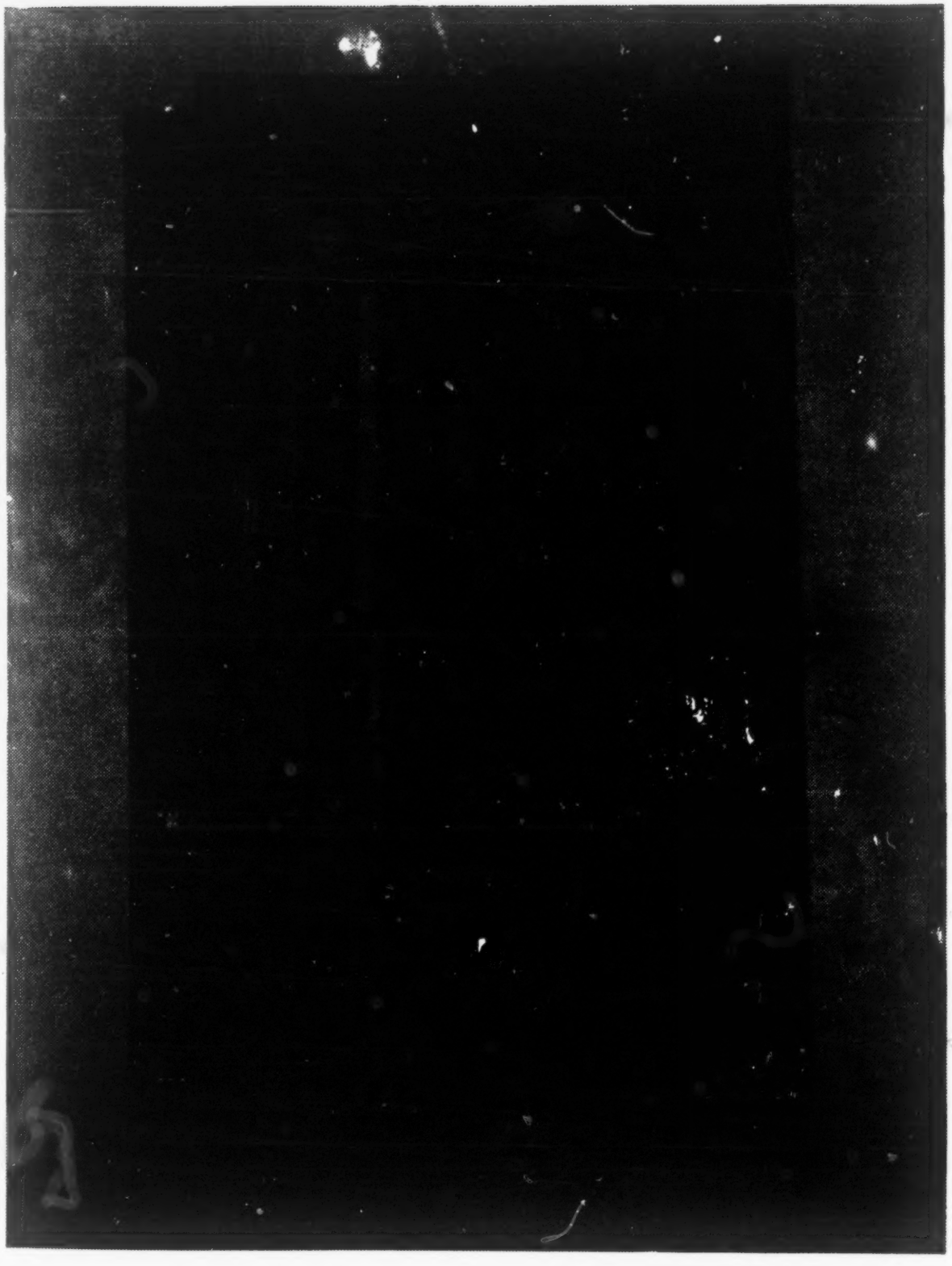

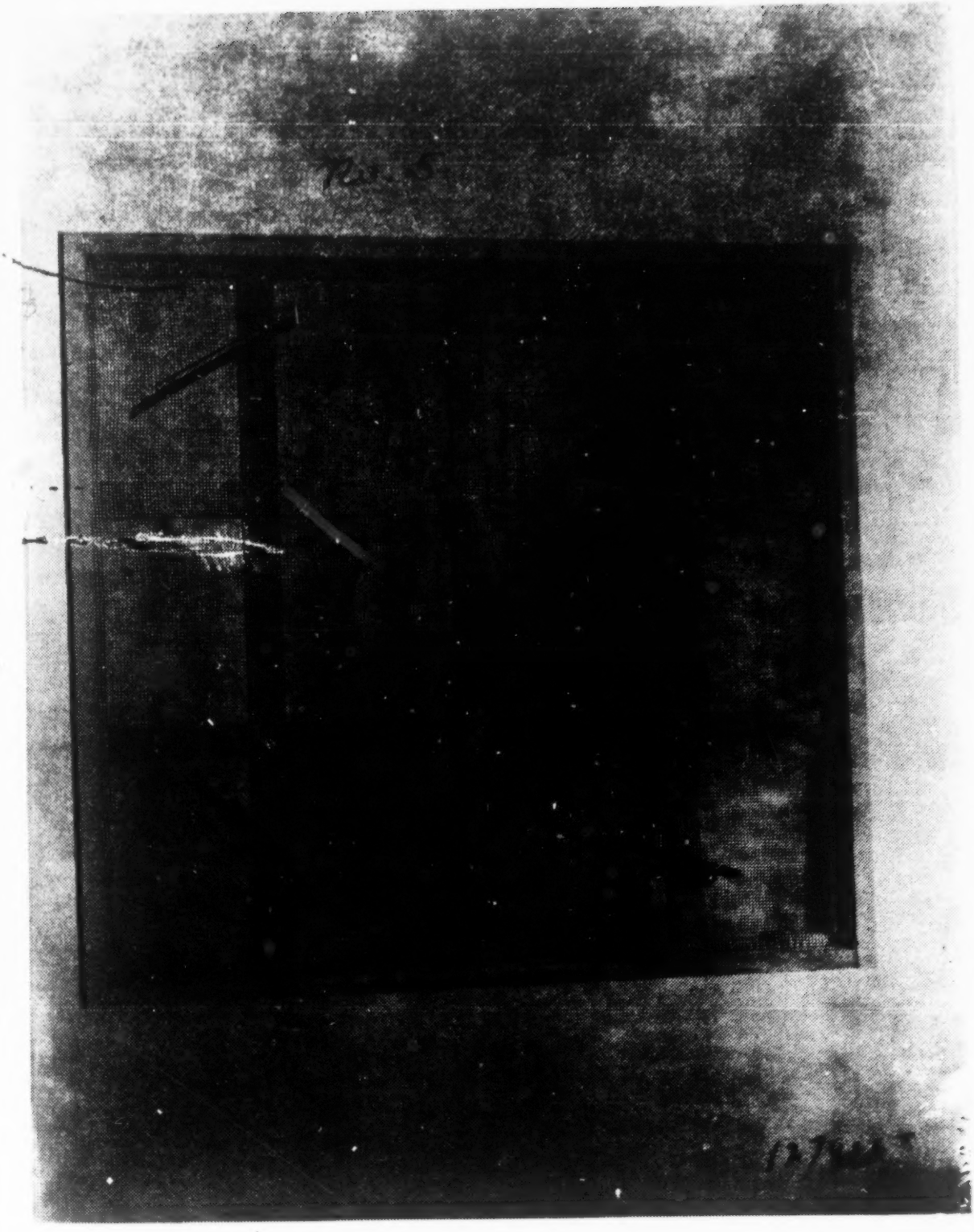

Sept. 21 – 1917
9 A. M.
Temp. of Room 72

"A"

U. C. 150 ova Incubator
3 trays – Tubes disconnected from stack

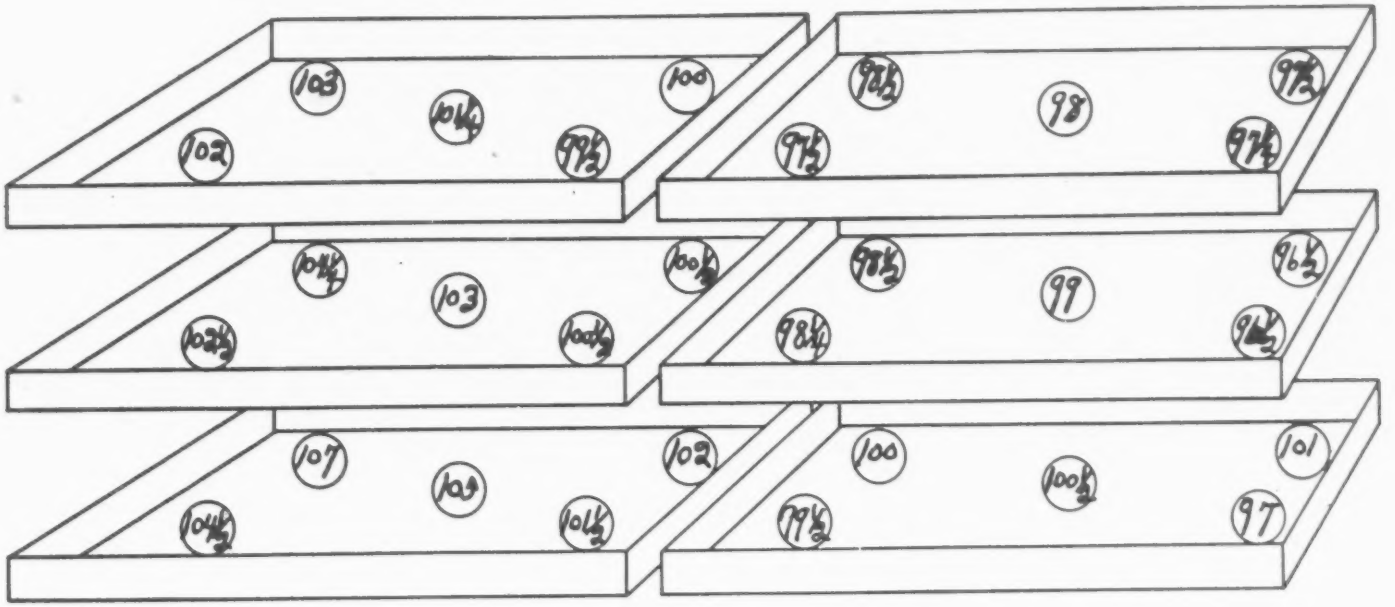

53

951

Sept. 27–1917
Temp. of Room 70°

"B"

U. C. Koons Incubator
3 trays = 4 draught tubes connected with stack.

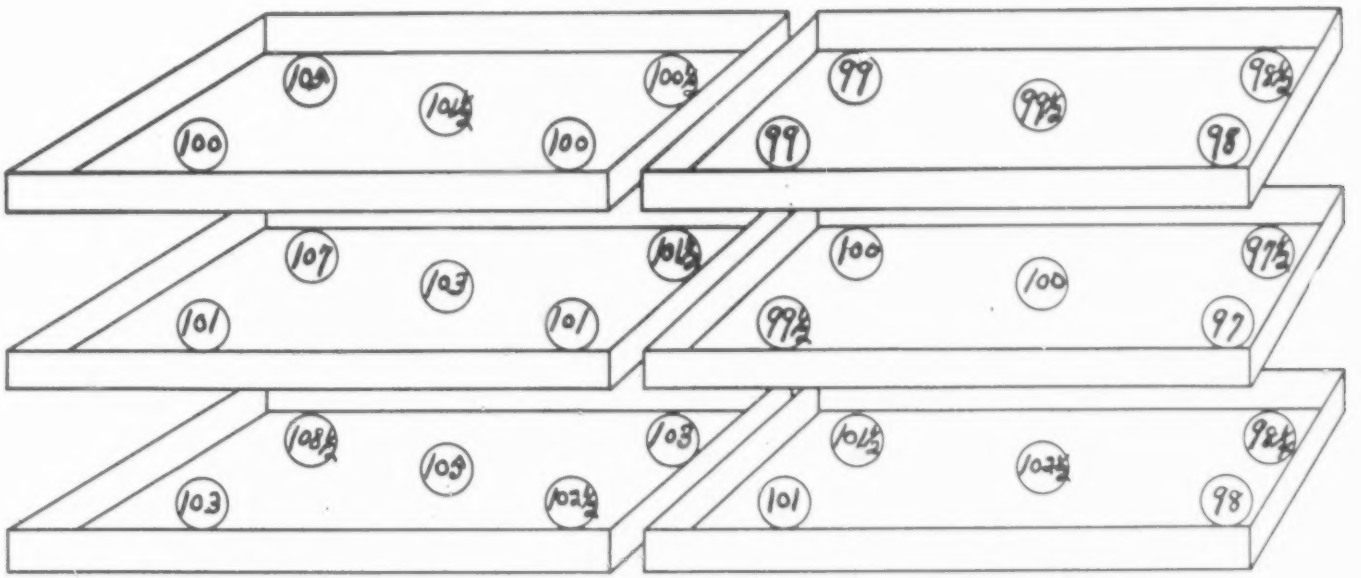

54

Sept. 29—1917
Temp. of Room 70°

"C"

U.C. Koons Incubator.
3 trays—4 draught tubes connected with stack.

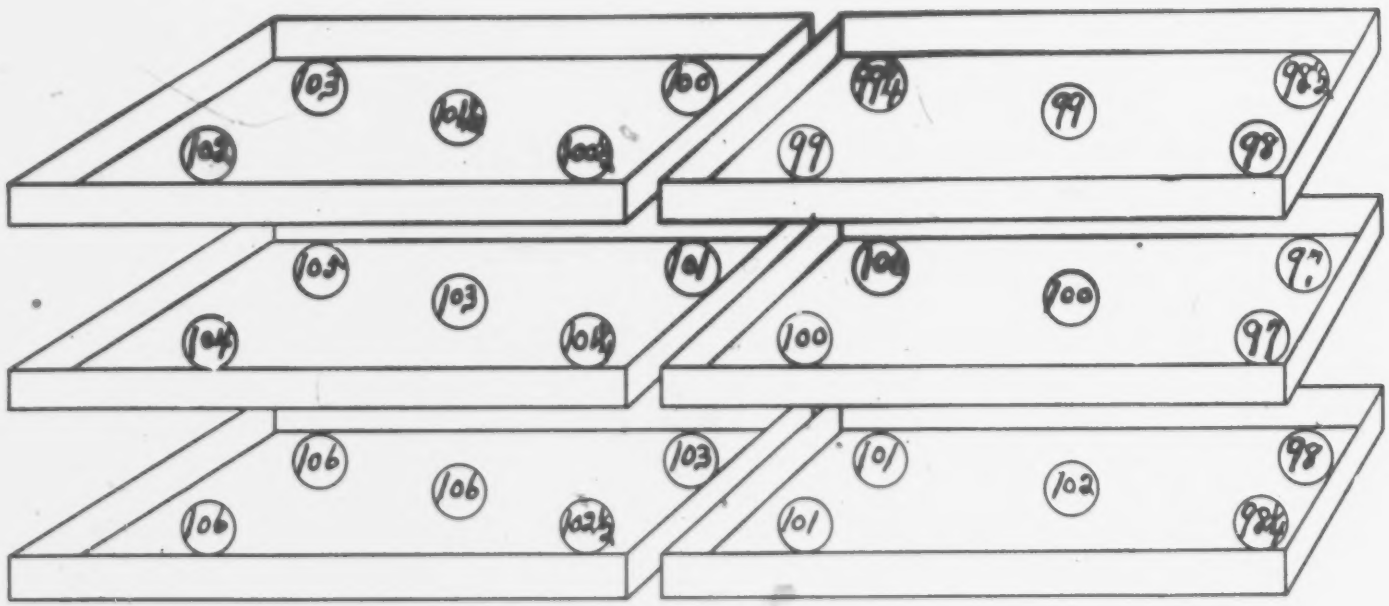

October 3–1917 "II"
Temp. of Room 70°

U. C. Iowa Incubator.
3 trays – 4 draught tubes connected with stack.

October 9—1917 "E" U. C. Koon's Incubator.
Temp of Room 70° 3 trays — draught tubes disconnected.

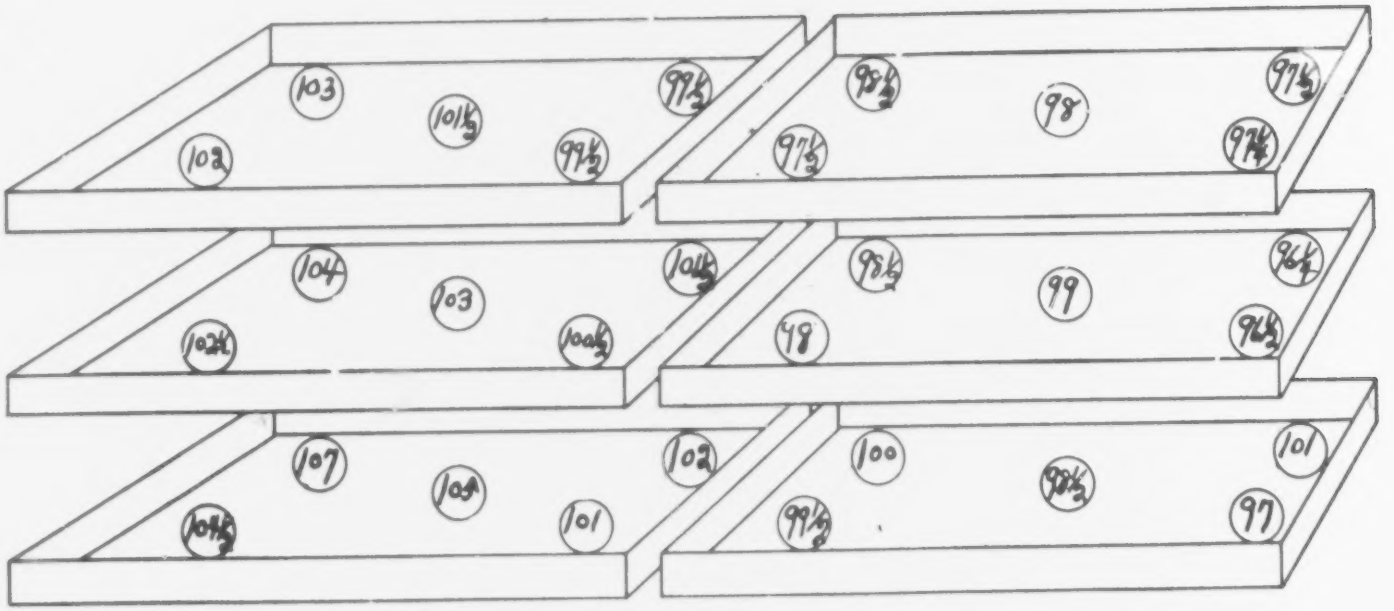

959

961

C

Div. 38 Room 378
Appn. No. 127315.
Filed Oct. 26, 1916.
Incubators.
Samuel D. Smith.

Commissioner of Patents,
Washington, D. C.

Sir: In the above entitled application please place the numeral 28 with proper lead lines on Figs. 1 and 3 of the drawings to indicate outlets as per enclosed blue print.

Respectfully.

Samuel B. Smith
By Staley & Bowman
Percy Norton

Springfield, Ohio

2 PRINT RETURNED
BY DRAFTING DIV.

ADDRESS ONLY
THE COMMISSIONER OF PATENTS,
WASHINGTON, D. C.

K.O'D.

Serial No. 127,915.

DEPARTMENT OF THE INTERIOR

UNITED STATES PATENT OFFICE

WASHINGTON March 12, 1918.

Samuel B. Smith, Assor.

Sir: Your APPLICATION for a patent for an IMPROVEMENT in Incubators,

filed Oct. 26, 1916, has been examined and ALLOWED.

The final fee, TWENTY DOLLARS, must be paid not later than SIX MONTHS from the date of this present notice of allowance. If the final fee be not paid within that period, the patent on this application will be withheld, unless renewed with an additional fee of $15, under the provisions of Section 4897, Revised Statutes.

The office delivers patents upon the day of their date, and on which their term begins to run. The printing, photolithographing, and engrossing of the several patent parts, preparatory to final signing and sealing, will require about four weeks, and such work will not be undertaken until after payment of the necessary fee.

When you send the final fee you will also send, DISTINCTLY AND PLAINLY WRITTEN, the name of the INVENTOR, TITLE OF INVENTION, AND SERIAL NUMBER AS ABOVE GIVEN, DATE OF ALLOWANCE (which is the date of this circular), DATE OF FILING, and, if assigned, the NAMES OF THE ASSIGNEES.

If you desire to have the patent issue to ASSIGNEES, an assignment containing a REQUEST to that effect, together with the FEE for recording the same, must be filed in this office on or before the date of payment of final fee.

After issue of the patent uncertified copies of the drawings and specifications may be purchased at the price of FIVE CENTS EACH. The money should accompany the order. Postage stamps will not be received.

Final fees will NOT be received from other than the applicant, his assignee or attorney, or a party in interest as shown by the records of the Patent Office.

Respectfully,

Jas. Newton
Thos. Ewing
Commissioner of Patents.

UNCERTIFIED CHECKS WILL NOT BE ACCEPTED.

LAW OFFICES
STALEY BOWMAN
PATENT SOLICITORS
WASHINGTON, D. C.

MAR 18 1918

March 16th, 1918.

Commissioner of Patents,

Sir:-

We hand you herewith check for $20.00 in payment of the final government fee on the application of

Samuel B. Smith
Ser. No. 127,915
Filed October 26th, 1916
INCUBATORS
Allowed March 12th, 1918
Patent to issue to
The Buckeye Incubator Company.

Respectfully,
STALEY & BOWMAN

CIW/AB

1916

CONTENTS:

1262860

1. Application 1 papers O.K.
2. Rejection NOV 1 1918 ✓
3. Amendment A MAR 6-1917 ✓
4. Rejection MAR 24 1917 ✓
5. Amendment B APR 7-1917 ✓
6. Rejection APR 12 1917 ✓
7. Amendment C APR-23 1917 ✓
8. Rejection MAY 3 1917 ✓
9. Asse Power of Atty JUN 21 1917
10. Amendment D JUN 28 1917
11. Rejection JUN 30 1917 ✓
Offsample Amendment E & Exhibits Feb 26 1918
13(a). Notice of Suit June 7-1926
13. Notice of Suit 4/17/22
14. Notice of Suit, July 16-23
15. 2 Notices of suit, Dec 27, 1923
16. Notice of Suit Nov. 10-1923
17(a). Oct. 17-1924
17. Notice of Suit, Mar. 13-1924
18(a). Sept. 19-1925
18. Notice of Suit June 17-1924
19(a). Sept. 19-1925
19. Notice of Suit, July 14-1924
20. Notice of Suit Aug 21-1924
21. Notice of Suit Sept. 5-1924
22(a+b). Aug. 28-1926
22. Notice of Suit Sept. 28-1924
23. Notice of Suit Oct. 4-1924
26. Notice of Suit Dec. 19-1924
27. Notice of Suit Feb. 13-1925
28. Notice of Suit May 26-1925
29. Notice of Suit Aug. 18-1925
30(a). Sept. 28-1926
30. Notice of Suit Sept. 9-1925
31. Notice of Suit May 26-1926
32. Notice of Suit June 9-1926
33(a). Mar. 7-1927
33. Notice of Suit July 17-1926
34. Notice of Suit July 19-1926
35. Notice of Suit Dec. 29-1926
36. Notice of C.C. of Appeals Feb. 15-1927
37. Notice of C.C. of Appeals June 10-1927
38. Notice of Suit June 25-1927
39. Notice of Suit June 25-1927
40(a). July 25-1927
40. Notice of Suit July 5-1927
41(a). Sept. 3-1927
41. Notice of Suit July 25-1927
42. Notice of Suit Aug. 1-1927
43. Notice of Suit Aug. 5-1927
44. Notice of Suit Nov. 28-1927
45. Notice of Suit Mar. 31-1928
46. Notice of Suit Mar. 31-1928
47. Notice of Suit April 6-1928

1262860

1. Application ..... 1 papers O.K.
2. Rejection ..... NOV 1 1918
3. Amendment A ..... MAR 6 1917
4. Rejection ..... MAR 24 1917
5. Amendment B ..... APR 7 1917
6. Rejection ..... APR 12 1917
7. Amendment C ..... APR 23 1917
8. Rejection ..... MAY 3 1917
9. Asse Power of Atty ..... JUN 21 1917
10. Amendment D ..... JUN 28 1917
11. Rejection ..... JUN 30 1917
- Substitute Amendment E & Exhibits ..... Feb 26 1918
13(a). Notice of Suit ..... June 7-1926 4/17/22
14. Notice of Suit ..... July 16 - 23
15. 2 Notices of suit, Dec 27, 1923
16. Notice of Suit ..... Nov. 10-1923
17(a). Notice of Suit ..... Oct. 17-1924
17. Notice of Suit, ... Mar. 13-1924
18(a). Sept. 19-1925
18. Notice of Suit, ... June 17-1924
19(a). Sept. 19-1925
19. Notice of Suit, ... July 14-1924
20. Notice of Suit ..... Aug 21-1924
21. Notice of Suit ..... Sept. 5-1924
22(a+b). Aug. 28-1926
22. Notice of Suit ..... Sept. 28-1924
23. Notice of Suit ..... Oct. 4-1924
24. Notice of Suit ..... Oct. 11-1924
25. Notice of Suit ..... Oct. 11-1924
26. Notice of Suit ..... Dec. 19-1924
27. Notice of Suit ..... Feb. 13-1925
28. Notice of Suit ..... May 26-1925
29. Notice of Suit ..... Aug. 18. 1925
30(a). Sept 28-1926
30. Notice of Suit ..... Sept. 9-1925
31. Notice of Suit ..... May 26-1926
32. Notice of Suit ..... June 9-1926
33(a). Mar. 7-1927
33. Notice of Suit ..... July 17-1926
34. Notice of Suit ..... July 19-1926
35. Notice of Suit ..... Dec. 29-1926
36. Notice of C.C. of Appeals Feb. 15-1927
37. Notice of C.C. of Appeals June 10-1927.
38. Notice of Suit ..... June 25-1927
39. Notice of Suit ..... June 25-1927
40(a). July 25-1927
40. Notice of Suit ..... July 5-1927
41(a). Sept. 3-1927
41. Notice of Suit ..... July 25-1927
42. Notice of Suit ..... Aug. 1-1927
43. Notice of Suit ..... Aug. 5-1927
44. Notice of Suit ..... Nov. 28-1927
45. Notice of Suit ..... Mar. 31-1928
46. Notice of Suit ..... Mar. 31-1928
47. Notice of Suit ..... April 6-1928
48. Notice of C.C.A. April 24-1928
49. Notice of Suit ..... April 6-1928
50. Notice of Suit ..... April 23-1928

121915 [See other side for continuation]

151

S. B. Smith
Pat. 1262,860

CDHuntington 119-30 35 to 42 44 } don't for Oct 31, 1916

CDH asked in durations 19 32 36 Mar 24, 1917

CDH none Apr 30 -.

51. Notice of Suit April 25-1928
52. Notice of C.C.A. April 28-1928
53. Notice of Suit June 4-1928
54. Notice of Suit June 4-1928
55. Notice of C.C.A. July 6-1928
56. Paper # 56 Jan. 7, 1929
57 Paper # 57, Apr. 23, 1929
58 Notice of Suit May 6, 1929
59 Notice of Suit May 11, 1929
60. Notice of Suit July 29-1929
61. Notice of Suit Sept. 9-1929
62. Notice of Suit Sept 9-1929
63. Notice of C.C. Appeals Sept. 12-1929
64. Notice of Suit Nov. 20-1929
65. Notice of Suit Nov. 27-1929
66. Notice of Suit May 13-1930
67. Notice of Suit May 13-1930
68. Notice of C.C. Appeals May 24-1930
69. Notice of C.C. Appeals Feb. 13-1931
70. Notice of Suit [illegible] 30-1931

75. Notice of Suit July 11-1932
76. Notice of Suit Sept 23-1932
77. Notice of Suit Feb. 23-1933
78. Notice of Suit Mar 17, 1933
79. Notice of Suit April 17-1933
80. Notice of Suit May 3-1933
81. Notice of Suit May 3 1933
82. Notice of Appeals June 3-1933
83.
84.

CDHuntington 119-30 35 to 42 44 } don't for Oct 31, 1916

CDH asked in dursins 19 32 36 Mar 24, 1917

CDH none Apr 30 -.

51. Notice of Suit April 25-1928
52. Notice of C.C.A. April 28-1928
53. Notice of Suit June 4-1928
54. Notice of Suit June 4-1928
55. Notice of C.C.A. July 6-1928
56. Paper # 56 Jan. 7, 1929
57 Paper # 57, Apr. 23, 1929
58 Notice of Suit May 6, 1929
59 Notice of Suit May 11, 1929
60. Notice of Suit July 29-1929
61. Notice of Suit Sept. 9-1929
62. Notice of Suit Sept 9-1929
63 Notice of C.C. Appeals Sept. 12-1929
64. Notice of Suit Nov. 20-1929
65. Notice of Suit Nov. 27-1929
66. Notice of Suit May 13-1930
67 Notice of Suit May 13-1930
68. Notice of C.C. Appeals May 24 1930
69. Notice of C.C. Appeals Feb. 13-1931
70 Notice of Suit July 30-1931
71. Notice of Suit Nov 20-1931
72 Notice of Suit Dec. 24-1931
73. Notice of Suit Dec. 30-1931
74 Notice of Suit June 13-1932
75. Notice of Suit July 11-1932
76. Notice of Suit Sept 23-1932
77. Notice of Suit Feb 23-1933
78. Notice of Suit Mar 17, 1933
79. Notice of Suit April 17-1933
80 Notice of Suit May 3-1933
81. Notice of Suit May 3 1933
82. Notice of Appeals June 3-1933
83.
84.

S. B. SMITH.

INCUBATOR.

APPLICATION FILED OCT. 26, 1916.

1,262,860.

Patented Apr. 16, 1918.

2 SHEETS—SHEET 2.

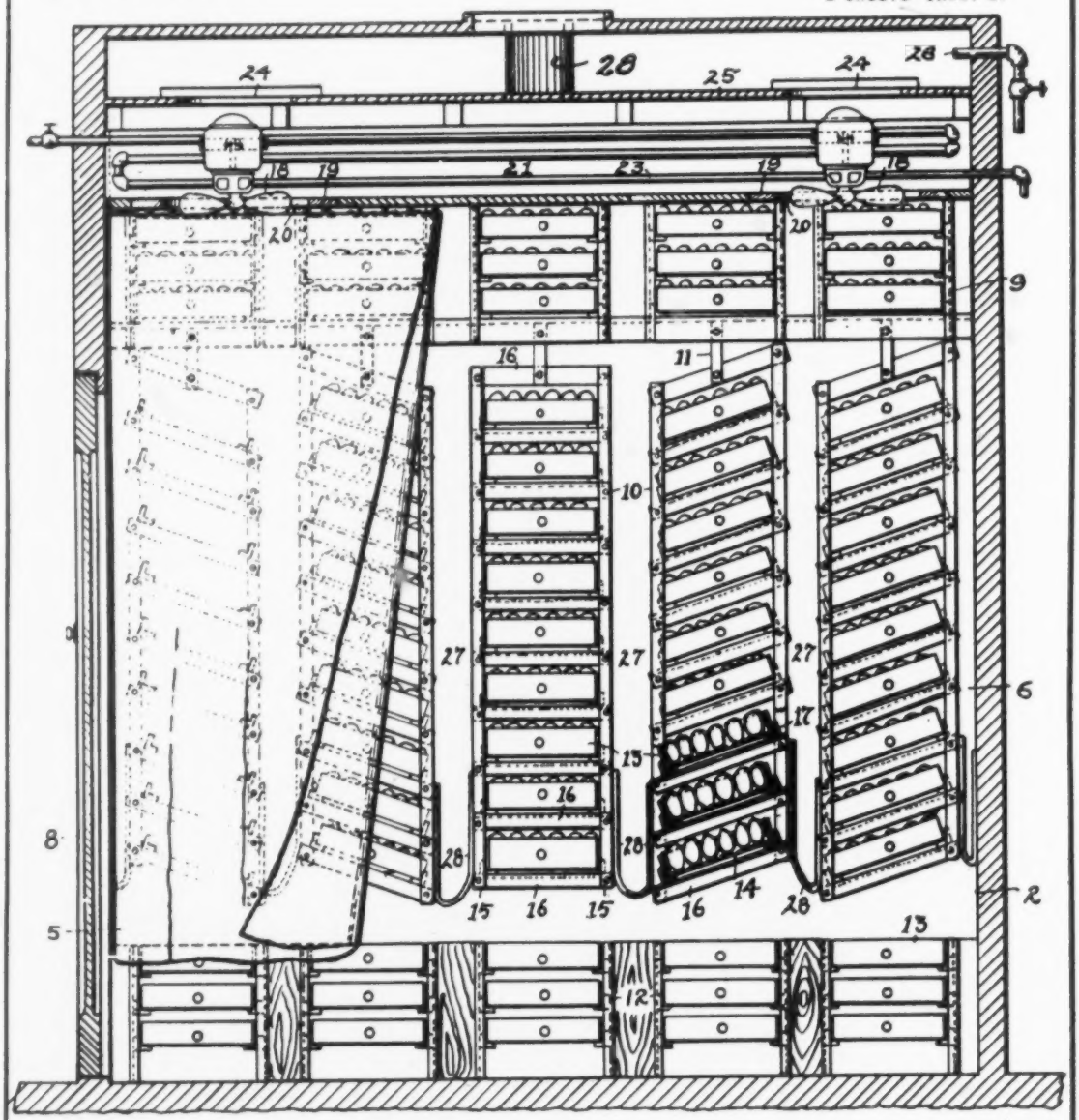

FIG. 3

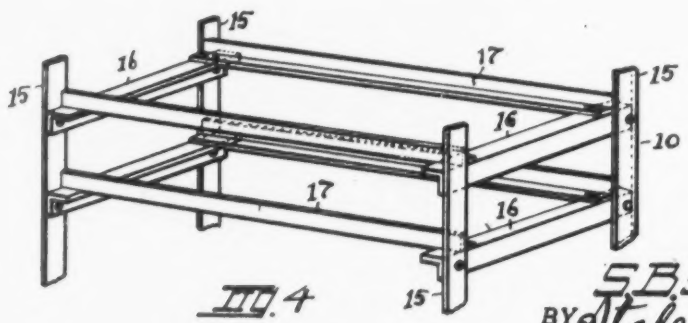

FIG. 4

INVENTOR.

S. B. SMITH.

BY Staley & Bowman

ATTORNEYS.

35

S. B. SMITH.

INCUBATOR.

APPLICATION FILED OCT. 26, 1916.

1,262,860.

Patented Apr. 16, 1918.

2 SHEETS—SHEET 1.

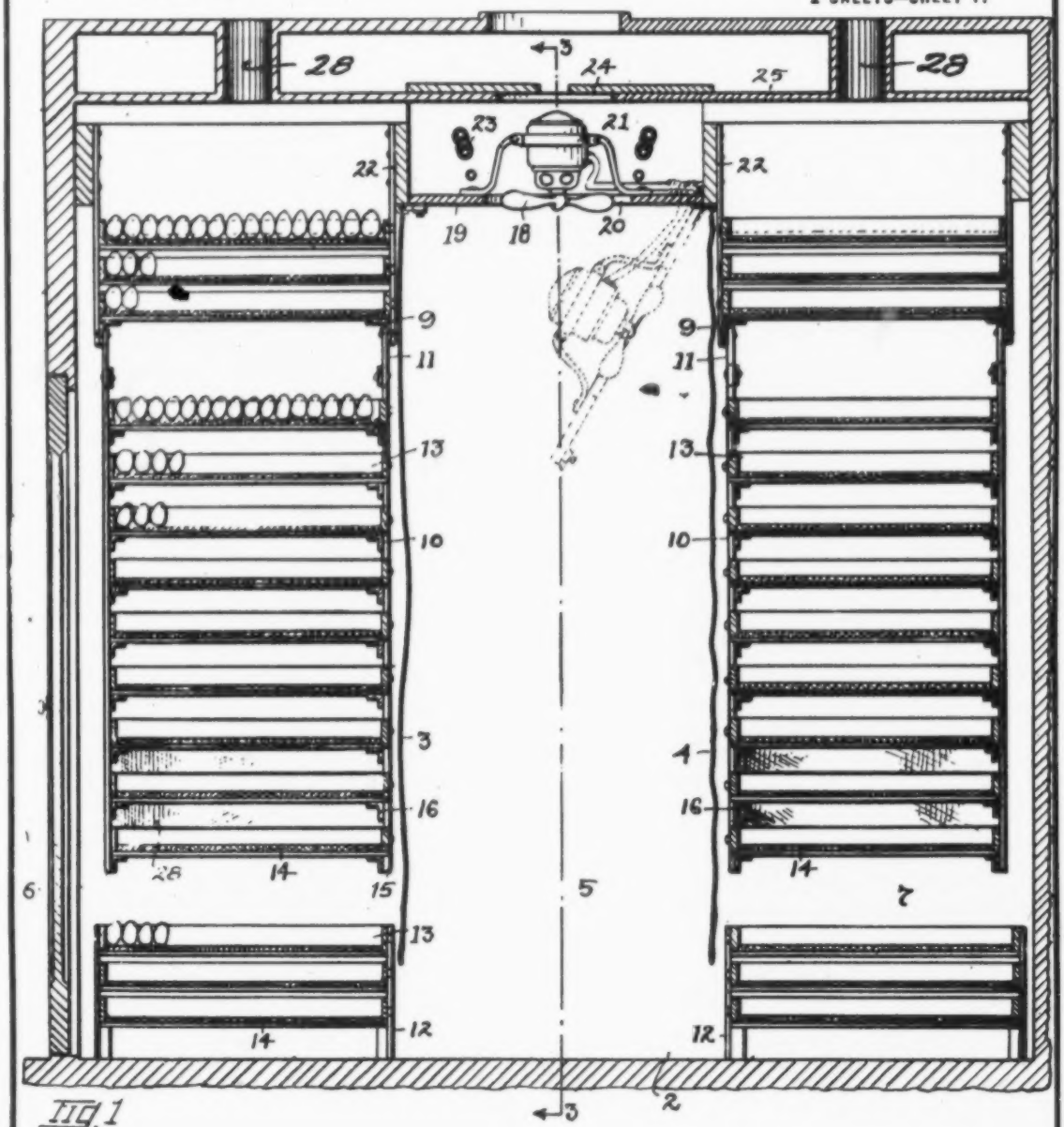

Fig. 1

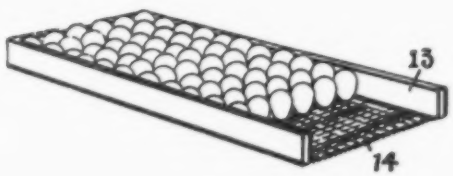

Fig. 2

INVENTOR.

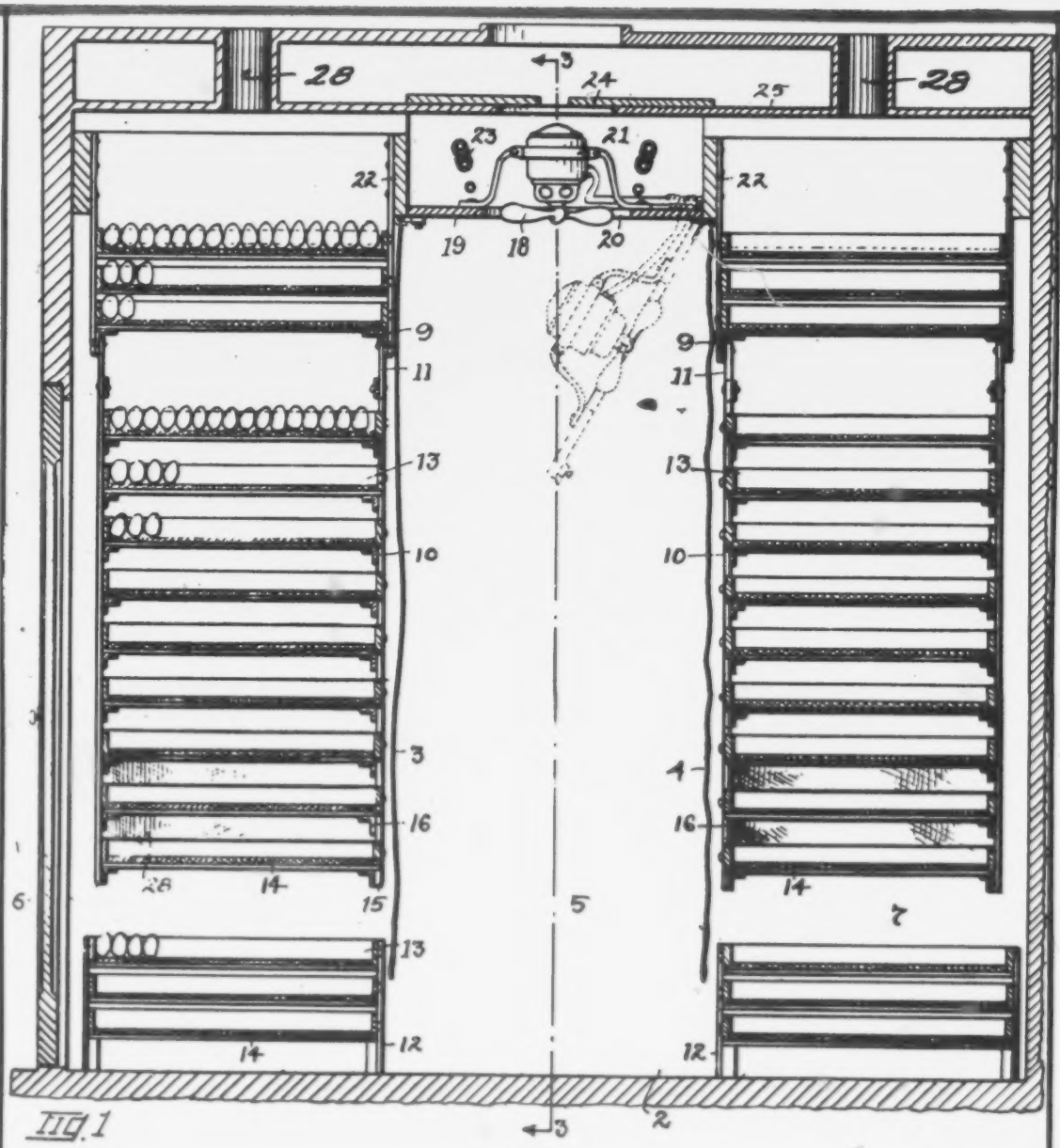

Fig. 1

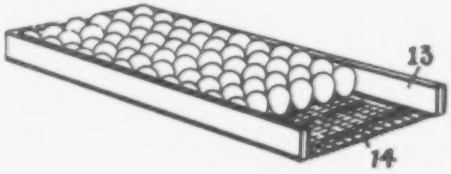

Fig. 2

INVENTOR.
S.D. SMITH.
BY Staley & Bowman
ATTORNEYS.

Allowed March 8, 1918

UNITED STATES PATENT OFFICE.

SAMUEL B. SMITH, OF CLEVELAND, OHIO, ASSIGNOR TO THE BUCKEYE INCUBATOR CO., OF SPRINGFIELD, OHIO, A CORPORATION OF OHIO.

INCUBATOR.

1,262,860. Specification of Letters Patent. Patented Apr. 16, 1918.

Application filed October 26, 1916. Serial No. 127,915.

To all whom it may concern:

Be it known that I, SAMUEL B. SMITH, a citizen of the United States, residing at Cleveland, in the county of Cuyahoga and State of Ohio, have invented certain new and useful Improvements in Incubators, of which the following is a specification.

The improved apparatus and method, is particularly designed for extensive operations wherein a chamber of large dimensions is adapted to contain thousands of eggs in separate trays arranged in tiers and the method of heating is such that the heated air is adapted to the eggs in various stages of incubation. There is a forced circulation of hot air through the chamber which is adapted preferably to maintain all eggs at temperatures between 100° and 105° Fahrenheit approximately and this improved system contemplates that fresh eggs will be placed in a horizontal plane, preferably by means of trays supported in horizontal planes, and after the eggs have been subject to the circulation of hot air for a predetermined time (the air circulating largely around the eggs) they will be placed in a tilted or inclined position in a different location but still subject to the same column of air and at this period of incubation they will be tilted in different planes at regular intervals during the time they remain in this latter position, and after they have remained for a predetermined time they will be again moved to a different position with reference to the forced circulation of hot air and so placed therein that the air will tend to keep the eggs below 105° temperature, and in this last named position the air will be forced to pass between the different eggs and will in effect act as a cooling medium for the eggs. The temperature of circulating air should be such as will prevent the eggs in the early stage of incubation from falling below 100° and the speed or velocity of the circulating air should be such as to carry the heat away from the eggs in the later stage of incubation and thereby hold the temperature of those eggs at 105° or slightly below that. It is manifest that the temperature will remain practically the same throughout the column of eggs, but the air is impelled with sufficient velocity to carry the heat away from the eggs which happen to be in the advanced stage of incubation.

In the accompanying drawings:

Figure 1 is a cross section of my improved incubator.

Fig. 2 is a perspective view of one of the egg trays with one end removed to more clearly disclose the open mesh bottom.

Fig. 3 is a vertical section of the incubator on line 3—3, Fig. 1.

Fig. 4 is a perspective view of a portion of one of the tilting racks for the trays.

The invention comprises a walled chamber 2 corresponding in size to that of an ordinary room, say approximately nine feet high, eight to ten feet wide, and of any desired length, and this chamber is subdivided longitudinally by two parallel rows of curtains 3 and 4 to provide a central compartment or corridor 5 and side compartments 6 and 7. Entrance to the corridor is gained by a door 8, and the compartments behind the curtains contain elevated stationary racks 9 which are within convenient reach of the attendant for introducing the fresh supply and from which elevated position the trays may be shifted at the proper time to a tier of tilting racks 10 on a lower plane and suspended therefrom by links 11. A series of stationary racks 12 are also arranged beneath the tilting racks 10, and all of said racks are of open construction and of the same size to permit interchange of the shallow trays 13 for the eggs to be hatched. These trays are provided with open mesh bottoms 14 upon which the smaller ends of the eggs rest in close and solid formation and each tray of eggs occupies the upper rack 9 for the first three days, and is then transferred to a place in the upper end of the tilting rack 10. During the next fifteen days the trays in the tilting rack are shifted from higher to lower planes therein and tilted at frequent intervals to stand in oppositely-inclined positions. The tilting of the eggs is preferably arranged to put the eggs substantially on their sides. When the eggs in the lower-most trays in the tilting racks 10 are about ready to hatch each tray is transferred to the stationary rack 12 where the chicks may be removed as occasion requires.

Each tilting rack 10 comprises perpendicular corner bars 15 pivotally united by a series of cross bars 16 carrying connecting angle irons 17 extending from front to rear

at each side and upon which the trays are adapted to be slidably supported. The links 11 are pivotally connected at the center of the uppermost cross bars 16 of each tilting rack, thus permitting an entire series of trays to be placed in an inclined position by merely raising or lowering one side of the rack by hand engagement. The weight and friction and balance of the parts cause the trays to remain in any shifted position, whether horizontal or inclined. The fans or series of fans 18 mounted upon the hinged trap doors 19 forming the ceiling of the central corridor 5 constitute the means for forcing the hot air through the chamber and there are circular openings 20 provided in said doors within which the fans are arranged properly. The longitudinal space 21 above the fans has open communication above the side walls 22 with the upper ends of the rack compartments behind the curtains 3 and 4 and these curtains extend a sufficient distance, as indicated in Fig. 1, to cause the heated air distributed by the fans to pass downwardly through the central corridor to a point near the bottom of the chamber where it can pass into the space occupied by the trays. As explained later the trays near the bottom are preferably arranged so that the air is forced to pass between the eggs in each tray thereby cooling or holding the temperature of those eggs down. Thence the air passes into spaces above the lower series of trays until it reaches the distributing space 21 above the fan. Coils of heating pipe 23 are arranged in the space 21 to heat the air and more or less fresh air may be taken in through the valved opening 24 above the space 21 and this fresh supply of air may be charged with steam to a greater or less degree by means of a valve controlled jet or pipe 26 see Fig. 3. The outlets 28 for the release of foul air are made of such restricted capacity as to prevent the undue escape of moisture. It is possible to limit the openings and so conserve the moisture by reason of the vitalizing effect of the power driven current upon the body of the air within the chamber. By lowering the hinged trap doors, the motor and fan are also easily reached for inspection, etc.

In Fig. 3 only a single curtain 3 is shown in place, the curtain or curtains at the right being entirely removed to disclose the racks and trays in full lines, and it will be also noted that the vertical spaces 27 between the adjacent tilting racks 10 are closed at their lower ends by flexible strips of fabric which are attached to and extend upward at each side of each rack so as to compel the air to circulate through the mesh bottom and around and about each egg as heretofore referred to, and as the eggs further advanced in incubation are contained in these lower trays and as the danger is that the temperature will rise in these eggs to a point injurious to incubation the improved method disclosed herein permits the circulating air to act as a medium to prevent the over heating at this stage of incubation and this is accomplished by promoting an induced draft within the lower trays. It is obvious that the fans can be so arranged and can be operated at such speed as to cause the hot air to circulate fast enough to keep the temperature throughout the chamber between the limits of 100° and 105°.

It, therefore, appears that the improved apparatus and method contemplates the application of hot air circulating in a column with such speed as to keep the temperature substantially uniform and so arranging the eggs that the fresh eggs are placed at one point in the column of air and held in a horizontal plane until they reach a predetermined stage of incubation and then put at a different point in the same column of air and kept in planes inclined to the horizontal and thereafter placed at such a point in the column of air that the forced draft of air acts to hold the eggs at a uniform temperature and to prevent them from becoming overheated and thereafter placing the eggs into final position for the hatching operation.

Any suitable thermostatic means may be employed for regulating the temperature, such for instance as a thermostat commonly employed in incubators of a well-known construction and illustrated in Letters-Patent No. 1,111,138, dated September 22nd, 1914, which thermostat may be suitably connected to the valve controlling the steam or hot water, as the case may be, which passes through the pipes 23.

Having thus described my invention, I claim:—

1. The method of hatching a plurality of eggs by arranging them at different levels in a closed chamber having restricted openings of sufficient capacity for the escape of foul air without undue loss of moisture and applying a current of heated air, said current being created by means other than variations of temperature and of sufficient velocity to circulate, diffuse and maintain the air throughout the chamber at substantially the same temperature, whereby the air will be vitalized, the moisture conserved and the units of heat will be carried from the eggs in the more advanced stage of incubation to those in a less advanced stage for the purpose specified.

2. The method of hatching a plurality of eggs by arranging them at different levels in a closed chamber having restricted openings of sufficient capacity for the escape of foul air without undue loss of moisture and applying a power driven current of heated

air in an adjacent chamber through openings into the egg chamber, said current being of sufficient velocity to circulate, diffuse and maintain the air throughout the egg chamber at substantially the same temperature, whereby the air will be vitalized, the moisture conserved and the units of heat will be carried from the eggs in the more advanced stage of incubation to those in a less advanced stage for the purpose specified.

3. The method of hatching a plurality of eggs by arranging them at different levels in a closed chamber having restricted openings of sufficient capacity for the escape of foul air without undue loss of moisture and applying a vertically directed current of heated air in an adjacent chamber to circulate in said egg chamber through upper and lower openings between said chambers, said current being created by mechanically moving means of such velocity as to diffuse and maintain the air throughout the egg chamber at substantially the same temperature whereby the air will be vitalized, the moisture conserved and the units of heat will be carried from the eggs in the more advanced stage of incubation to those in the less advanced stage for the purpose specified.

4. In an incubator, a closed chamber having a central corridor provided with an air-distributing space in its upper portion and a power-driven fan in said space, curtains at each side of said corridor, arranged to permit the air to circulate from the bottom of the chamber into the part of the chamber behind the curtains, passageways connecting the air distributing space with the corridor and the parts of said chamber behind the curtains, separate stationary and tilting racks behind said curtains, egg-trays having open-mesh bottoms removably mounted upon said racks, and means to heat the air circulated through said chamber.

5. In an incubator, a closed chamber with a vertically disposed partition to provide a corridor having upper and lower passage ways to said chamber, egg trays arranged at different levels in said chamber, a power driven fan creating a current in said corridor to circulate through said passage ways and egg trays, said chamber having restricted openings of sufficient capacity for the discharge of foul air without undue loss of moisture and means to heat the air circulated through said chamber.

In testimony whereof, I have hereunto set my hand this 20th day of October, 1916.

SAMUEL B. SMITH.

Witnesses:

HANNAH D. PLAIN,

IDA M. SMITH.

70 (Certificate of Clerk to Stipulation.)

United States of America,
Fourth Div. District of Minnesota—ss.

I, Joel M. Dickey, Clerk of the United States District Court in and for the District of Minnesota, do hereby certify that the anexed and foregoing is a true and full copy of the original and of the endorsements thereon, now remaining among the records of the said Court in my office.

Seal
U. S. Dist. Court,
Dist of Minnesota,
Fourth Division.

In Testimony Whereof, I have hereunto subscribed my name and affixed the seal of the aforesaid Court at Minneapolis, this 15th day of June, A. D. 1933.

JOEL M. DICKEY, Clerk,
By Thomas H. Howard, Deputy Clerk.

Filed Jun. 17, 1933. E. E. Koch, Clerk.

982 And thereafter the following proceedings were had in said cause in the Circuit Court of Appeals, viz.:

(Appearance of Mr. Ralph E. Williamson as Counsel for Appellants.)

United States Circuit Court of Appeals
Eighth Circuit.

E. H. Snow, et al., Appellants,
No. 9757. vs.
Samuel B. Smith.

The Clerk will enter my appearance as Counsel for the Appellants.

RALPH E. WILLIAMSON.

(Endorsed): Filed in U. S. Circuit Court of Appeals, Dec. 14, 1933.

(Appearance of Mr. James F. Williamson as Counsel for Appellants.)

Hon. E. E. Koch, Clerk of the
Above Entitled Court,
Federal Building,
St. Louis, Missouri.

Sir:

You will please enter our appearance on behalf of the defendant-appellant in the above entitled case.

Signed at Minneapolis, Minnesota, this 26th day of May, 1933.

WILLIAMSON & WILLIAMSON,
JAMES F. WILLIAMSON,
925 Metropolitan Life Building,
Minneapolis, Minnesota.

983 (Endorsed): Filed in U. S. Circuit Court of Appeals, May 29, 1933.

(Appearance of Mr. A. L. Ely as Counsel for Appellee.)

The Clerk will enter my appearance as Counsel for the Appellee.

A. L. ELY,
Leader Bldg.,
Cleveland, O.

(Endorsed): Filed in U. S. Circuit Court of Appeals, Jun. 7, 1933.

(Appearance of Mr. A. C. Paul as Counsel for Appellee.)

The Clerk will enter my appearance as Counsel for the Appellee.

A. C. PAUL.

(Endorsed): Filed in U. S. Circuit Court of Appeals, Jul. 19, 1933.

(Appearance of Mr. Maurice M. Moore as Counsel for Appellee.)

The Clerk will enter my appearance as Counsel for the Appellee.

MAURICE M. MOORE,
710 Security Building.

(Endorsed): Filed in U. S. Circuit Court of Appeals, Dec. 13, 1933.

---

984 (Order of Argument.)

November Term, 1933.
Wednesday, December 13, 1933.

This cause having been called for hearing in its regular order, argument was commenced by Mr. James F. Williamson and continued by Mr. Ralph E. Williamson for appellant, and the hour for adjournment having arrived further argument was postponed until tomorrow morning.

(Order of Submission.)

November Term, 1933.
Thursday, December 14, 1933.

This cause having been called for further hearing, argument was continued by Mr. A. L. Ely for appellee and concluded by Mr. Ralph E. Williamson for appellants.

Thereupon, this cause was submitted to the Court on the transcript of the record from said District Court and the briefs of counsel filed herein.

---

985 (Opinion.)

United States Circuit Court of Appeals
Eighth Circuit.

No. 9757.—MARCH TERM, A. D. 1934

E. H. Snow, and E. H. Snow doing business as Snow's Hatcheries and Snow's Incubator Company,
Appellants,
vs.
Samuel B. Smith,
Appellee.

Appeal from the District Court of the United States for the District of Minnesota.

Mr. James F. Williamson and Mr. Ralph E. Williamson for appellants.

Mr. Albert L. Ely (Mr. George C. McConnaughey and Messrs. Paul, Paul and Moore were with him on the brief), for appellee.

Before STONE and SANBORN, Circuit Judges, and WYMAN, District Judge.

STONE, Circuit Judge, delivered the opinion of the court.

This is an action for infringement of two method claims (claims 1 and 2) of Patent # 1,262,860, issued to Samuel B. Smith covering method and apparatus claims for an egg incubator. From a decree determining infringement, this appeal is brought by defendants. The issues here are invalidity of these claims and non-infringement, if valid.

I.

VALIDITY.

This patent has been frequently litigated. It has been held valid by every court which has passed upon that issue. This court so held in *Miller Hatcheries* v. *Buckeye Incubator Co.*, 41 Fed. [2d] 619, 620, wherein this Court not only accorded decisions in the Third and Sixth Circuits due comity but "independently examined

the question of validity". Obviously, that decision should control here unless it be clearly shown that important additional evidence bearing on invalidity is present here which was not before this court in the above case. Appellants contend that such evidence is here and rely upon an article in "Ure's Dictionary of Arts, Manufactures and Mines (Vol. II, pp. 652-653) and upon three patents, being #426,321 to Proctor and Knowles, #843,909 to Peters and Hungerford and #1,010,809 to Schmidt and Schutterle. The Dictionary article covers two distinct matters. The first describes two incubation systems both of which depend solely upon a maintenance of proper hatching temperature by heating a compartment with warm water. In one the water is in a circulatory system of pipes and the eggs are apparently placed in trays between the layers of pipes. There is no thought of air circulation. The second method is not described but has to do with the use of water from warm mineral springs. The three patents all have to do with air circulatory systems. The Proctor and Knowles patent is for a "drying-machine" designed to create a circulation of warm air throughout a room for the purpose of drying articles of any character placed or hung therein. Peters and Hungerford is for an "Atmosphere-regulating system" for maintenance of substantially uniform conditions of temperature, humidity and ventilation in a room. Schmidt and Schutterle is for an "Apparatus for drying Macaroni and like bakery products." Study of each and all of these references convinces that the problems they sought to solve are essentially different from those of incubation and that they are not so anticipatory of Smith as to render this patent invalid. We find in all of this evidence no reason to depart from the above conclusion that this patent is valid as announced by this Court in the Miller Hatcheries case, *supra*.

II.

INFRINGEMENT.

Determination of infringement depends largely upon the scope to be given the two above claims of the patent. The contentions as to the scope of these claims is best appreciated after a statement of the problem, the patent and the claims.

The patent and this controversy are comprehended only if certain basic facts which govern incubation are understood. These have to do with the proper development of the embryo of the egg into a chick, and of course, depend upon the features of such development existing naturally in the egg. During the twenty-one

days necessary for complete incubation, the problem requires consideration of the vital effects of temperature, moisture and ventilation. Temperature is involved because development of the embryo requires a temperature of about 100 degrees Fahrenheit and this requirement continues during the entire incubation period. The maintenance of this desirable temperature is complicated by the fact that the temperature disposition of the egg changes during incubation. During approximately the first half of the incubation period the egg is receptive of heat from a surrounding temperature of 100 degrees while during the last half it is giving off heat under such surrounding temperature. This change is fairly regular and is progressive. Because of this change in the temperature characteristic of the egg at different stages of incubation, it is obvious that temperature control—that is, maintenance of all eggs at all times at about 100 degrees—presents a different problem depending on whether the eggs in the incubator are all at the same stage or are at different stages of incubation. Smith addressed himself to the situation where the eggs were in all stages of incubation. His problem, therefore, was to supply about 100 degrees of heat to all eggs in the first half of the incubation period stages and to remove from those in the later stages any excess over 100 degrees—to maintain all eggs at about 100 degrees.

Moisture was another element of the problem because while eggs constantly give off moisture, the chick will be below normal if this evaporation takes place unduly. In short, it must be controlled and kept normal. Ventilation is important because the incubating eggs give off enough carbon-dioxide to be harmful if it is not released. Since Smith was concerned with eggs which were at all stages of incubation, these features of moisture and ventilation were constantly present. His entire problem was to maintain a temperature for all eggs of about 100 degrees with provisions for maintaining the proper moisture conditions and for sufficiently purifying the air of the carbon-dioxide.

The subject of the invention is an improved apparatus and method in incubators and is "particularly designed for extensive operations wherein a chamber of large dimensions is adapted to contain thousands of eggs in separate trays arranged in tiers." (p. 1, 11. 9-12). The basic purpose of the method is that ""the heated air is adapted to the eggs in various stages of incubation" (p. 1, 11. 13-15). The air is so "adapted" if *all* of the eggs can be maintained at "temperatures between 100 degrees and 105 degrees Fahrenheit approximately" (p. 1, 11. 17-19).

The main principles of the method are two: First, a forced circulation of the heated air and, second, the positioning of the eggs at different stages of incubation. The circulation is to be such as to be "largely around the eggs" (p. 1, l. 25) in the earlier stages of incubation and "between the different eggs" (p. 1, l. 39) at the advanced stages so that, during these advanced stages, it "will in effect act as a cooling medium for the eggs" (p. 1, ll. 39-40). The temperature of this circulating air is to be such "as will prevent the eggs in the early stage of incubation from falling below 100 degrees" (p. 1, ll. 42-43) and the speed or velocity of the circulation is to be such "as to carry the heat away from the eggs in the later stage of incubation and thereby hold the temperature of those eggs at 105 degrees or slightly below that" (p. 1, ll. 45-48). By this action, "the temperature will remain practically the same throughout the column of eggs, but the air is impelled with sufficient velocity to carry the heat away from the eggs which happen to be in the advanced stage of incubation" (p. 1, ll. 49-55). The positioning of the eggs primarily involves the "location" of the trays. There are three of these "locations". The first is that of trays containing the fresh eggs. After being in this location for "a predetermined time" (p. 1, l. 24), they are removed to "a different location but still subject to the same column of air" (p. 1, ll. 27-28). After remaining in this second location for "a predetermined time" (p. 1, ll. 32-33) they are "again moved to a different position with reference to the forced circulation of hot air and so placed therein that the air will tend to keep the eggs below 105 degrees temperature" (p. 1, ll. 33-37). The description of method just taken from the early part of the specifications is summarized in the patent just after description of the apparatus and before statement of the claims (on p. 2, ll. 79-96) as follows:

"It, therefore, appears that the improved apparatus and method contemplates the application of hot air circulating in a column with such speed as to keep the temperature substantially uniform and so arranging the eggs that the fresh eggs are placed at one point in the column of air and held in a horizontal plane until they reach a predetermined stage of incubation and then put at a different point in the same column of air and kept in planes inclined to the horizontal and thereafter placed at such a point in the column of air that the forced draft of air acts to hold the eggs at a uniform temperature and to prevent them from becoming overheated and thereafter placing the eggs into final position for the hatching operation."

The general statements in the description of method, strongly intimate and the described apparatus and the method claims make cer-

tain that the arrangement of eggs (at various incubation stages) and the direction of air circulation is such as, in the words of the three method claims, that "the units of heat will be carried from the eggs in the more advanced stage of incubation to those in a less advanced stage."

In the general description of method no mention is made of the moisture and ventilation problems. This is disclosed in the description of apparatus which shows restricted and controllable intakes and vents for outside air for ventilation and a valve controlled steam or hot water jet for moisture.

From the above description it is evident that the disclosure was of a method embodying two co-acting elements: a column of eggs in trays wherein the trays would be progressively located in three different locations beginning with the fresh eggs, then in a second location and finally in a last location; the circulation, through or around the eggs in the column, of temperature controlled heated air (with moisture and ventilation provision) in such manner as to carry off the surplus heat units from the advanced eggs to those less advanced.

With this statement of the method disclosed, we come to the claims based thereon. There are three method claims (1, 2 and 3), of which only claims 1 and 2 are here involved. All three of them provide for hatching a plurality of eggs "by arranging them at different levels in a closed chamber." These three claims are progressively narrowed. The narrowest (claim 3) covers "a vertically directed current of heated air in an adjacent chamber to circulate in said egg chamber through upper and lower openings between said chambers." Claim 2 omits the restriction of a particular directed ("vertically") air current but contains the restriction of the separate chambers (air and eggs) by stating "a power driven current of heated air in an adjacent chamber through openings into the egg chamber." Claim 1 omits both of the above restrictions and is broadly for "a current of heated air * * of sufficient velocity to circulate, diffuse and maintain the air throughout the chamber [incubator] at substantially the same temperature, whereby the air will be vitalized, the moisture conserved and the units of heat will be carried from the eggs in the more advanced stage of incubation to those in a less advanced stage."

Claim 3 is not involved here. Claim 2 is clearly not broad enough to cover the accused device because that device has no separate chambers. In its expression, claim 1 is broad enough to cover any

circulation of heated air (ventilated and moistened) in a closed chamber (incubator) having a plurality of eggs "arranged at different levels" which circulation will maintain the temperature, preserve vitality of the air, conserve moisture and carry the heat from the advanced eggs to those less advanced. It is with that claim only we are concerned for if it is to be given the full scope of its expression it covers the accused device. Appellee contends for a broad scope while appellants urge a very narrow scope.

The first inquiry is whether the broad scope of the expression is justified by the disclosure of the method in the patent. The first matter which attracts attention in comparison of the disclosure and of the claim is the arrangement of the eggs. The statement of the claim is that the eggs are arranged "at different levels". This is broad enough to cover any arrangement at more than one level. The disclosure is an arrangement of "separate trays [containing eggs] * * in tiers" (p. 1, l. 12) and a definite location and two definite changes of location of the trays in a tier during the incubation. The arrangement, location and changes are not confined to the particular apparatus disclosed but apply equally to the method (p. 1, l. 8). In describing such, the patentee (italics ours) says: "this improved *system* contemplates that fresh eggs will be placed in a horizontal plane, preferably by means of trays supported in horizontal planes, and after the eggs have been subject to the circulation of hot air *for a predetermined time* (the air circulating largely around the eggs) they will be placed in a tilted or inclined position *in a different location* but still subject to the same column of air and at this period of incubation they will be tilted in different planes at regular intervals during the time they remain in this latter position, and *after they have remained for a predetermined time* they will be *again moved to a different position with reference to the forced circulation of hot air* and so placed therein that the air will tend to keep the eggs below 105° temperature, and *in this last named position* the air will be forced to pass between the different eggs and will in effect act as a cooling medium for the eggs." The reasons for this particular positioning of the eggs are made clear in the patent. All through the specifications and in each of the method claims runs the purpose of carrying the excess heat of the advanced eggs away from them in order to keep them below 105 degrees and of conveying such heat units to the earlier eggs in order to help maintain them at about 100 degrees. The last above quotation afforded an arrangement, location and change of location of eggs in three progressive stages of incubation which would work out the very idea of cooling the advanced eggs and conveying their

excess heat units to the cooler eggs. A current of air "forced to pass between the different eggs" (p. 1, 11. 38-39) in advanced incubation and thence subjecting the eggs in the second location to the "same column of air" (p. 1, 1. 28) and thereafter "circulating largely around" (p. 1, 1. 25) the fresh eggs in the first location would do precisely what the patentee wished, namely, reduce the temperature of the advanced eggs and transfer those heat units to the eggs "in the less advanced stage" (see three method claims). This danger of overheating of the advanced eggs is emphasized in connection with the apparatus where, after stating the desirability of the flexible strips of fabric to close the bottoms of the vertical spaces (27 of Fig. 3) between the tilting racks, the patent continues: "As the eggs further advanced in incubation are contained in these lower trays and as the danger is that the temperature will rise in these eggs to a point injurious to incubation the improved method disclosed herein permits the circulating air to act as a medium to prevent the over heating at this stage of incubation and this is accomplished by promoting an induced draft within the lower trays."

From the above, it would seem that the arrangement, location and change in location of the eggs at various stages of incubation was an essential feature of the disclosure. Nowhere is there a suggestion that the patentee has discovered that the desired results can be reached without or by some other arrangement, location or changes. Having disclosed this as an essential of his method with no hint, revelation or teaching to the contrary the broad claim to arrangement of the eggs "at different levels' cannot be extended to an arrangement of trays in a tier which alternates fresh and advanced eggs and where a tray is never moved from its position during the entire incubation period. The disclosure is limited to positions, in the egg column, of eggs in different "stages" of incubation and the change or shift of such positions—the eggs in the "early" stage of incubation are in one position where they remain a "pre-determined time" when they are shifted to another place in the column; from this second position, they are (after remaining a "pre-determined time") again shifted to a third position in the column.

The arrangement of the air currents ("columns") is repeatedly stated to be such as to carry the heat given off from the advanced eggs to those less advanced. When this is considered in connection with the above arrangement of eggs at various stages of incubation, it is difficult to see how the desired results can be secured except by a current of air passing first through the trays containing the most advanced eggs. That is the way appellee has devised his

apparatus; it is the only way revealed by the patent or in practice and it is successful.

Claim 1 (and, also, claim 2) must be so limited to preserve either of them. So limited, the question of infringement remains.

INFRINGEMENT.

Appellants' device is based on an entirely different method. As to arrangement of eggs, it mixes up those in various stages of incubation—not in the same tray but as to trays, there is no part of the egg column set aside to eggs in a particular stage but trays of eggs in one stage are layered in with trays in other stages in a predetermined order. Another difference is that a tray is never moved when once placed in the column. As to the air currents, the arrangement is different. The conception and operation of appellee's device is a column of air passing through the column of eggs in a definite direction—from eggs in advanced stages to those less advanced. In appellants' device, the conception and operation is a wide, general diffusion of air kept moving around all of the eggs without relation —as to direction—to the location of eggs in particular stages of incubation. In fact, the arrangement of eggs by appellants could not permit of such directioning of air currents.

Thus differing in both essentials of the patent—arrangement of eggs and air current—from the device disclosed by the patent, appellants' device is not infringing.

The decree is reversed with directions to dismiss the complaint.
Filed April 12, 1934.

---

994 (Decree.)

United States Circuit Court of Appeals

Eighth Circuit

March Term, 1934.

Saturday, April 14, 1934.

E. H. Snow, and E. H. Snow doing business as Snow's Hatcheries and Snow's Incubator Company, Appellants,

No. 9757 vs.

Samuel B. Smith.

Appeal from the District Court of the United States for the District of Minnesota.

This cause came on to be heard on the transcript of the record from the District Court of the United States for the District of Minnesota, and was argued by counsel.

On Consideration Whereof, it is now here ordered, adjudged and decreed by this Court, that the decree of the said District Court, in this cause be, and the same is hereby, reversed with costs; and that E. H. Snow, and E. H. Snow doing business as Snow's Hatcheries and Snow's Incubator Company have and recover against Samuel B. Smith the sum of . . . . . Dollars for their costs in this behalf expended and have execution therefor.

It is further ordered that this cause be, and the same is hereby, remanded to the said District Court with directions to dismiss the complaint.

April 14, 1934.

United States Circuit Court of Appeals

EIGHTH CIRCUIT

No. 9757

MARCH TERM, A. D., 1934.

E. H. SNOW AND E. H. SNOW, DOING BUSINESS AS SNOW'S HATCHERIES AND SNOW'S INCUBATOR COMPANY,

Appellants,

vs.

SAMUEL B. SMITH,

Appellee.

PETITION OF APPELLEE FOR REHEARING

Now comes the plaintiff-appellee herein and respectfully prays that a rehearing may be granted herein.

The purpose of this petition for rehearing is to call attention to material matters of law and fact inadvertently overlooked by the Court, as shown by its opinion filed herein on April 12, 1934.

A brief statement of the grounds therefor is:

1. The opinion of this Court filed April 12, 1934, found non-infringement of Claim 1 of the patent-in-suit upon the ground that such claim was specifically limited to a column of air passing through a column of eggs in a definite direction —from eggs in advanced stages to those less advanced and

therefore defendant-appellant's device did not infringe because it provided a general diffusion of air kept moving around all of the eggs without relation—as to direction—to the location of eggs in particular stages of incubation.

2. The opinion herein of this Court (page 9 of typewritten copy) states:

> "It is difficult to see how the desired results can be secured except by a current of air passing first through the trays containing the most advanced eggs."

Such language clearly indicates that this Court overlooked the necessary function and result of the continuous recycling movement of air in defendant Snow's machine which is characteristic of the Smith patent-in-suit.

3. This difficulty of perceiving the achievement of the desired results of the patented process except when carried out in one narrow specific way leads to a conflict of opinion and decision with the Circuit Court of Appeals for the Ninth Circuit and with the opinion of the Circuit Court of Appeals for the Third Circuit. Comity seeks uniformity of decision and avoidance of repeated and continued litigation. While comity's obligation is not imperative and comity is not a rule of law, yet it is highly persuasive. *Mast, Foos & Co., v. Stover,* 177 U. S. 485, 488, 44 L. Ed. 856, 858. *Sanitary Refrigerator Co. v. Winters,* 280 U. S. 30, 35, 74 L. Ed. 147, 153.

4. The Circuit Court of Appeals for the Ninth Circuit, on April 9, 1934, filed its opinion in *Waxham v. Smith, et al.,* No. 7154. In that case the same question as to the scope of Claim 1 of the same patent and the same question as to infringement were involved. These questions were the effect of the direction of the air current, arrangement of eggs, arrangement of eggs with respect to the current flow of air, and shifting of the eggs during the process. The general character and movement of the air current, mode of operation and process of incubation in the Robbins and Snow machines are the same.

These questions were all considered by the Circuit Court of Appeals for the Ninth Circuit and decided (April 9, 1934) adversely to the defendant and its holding is directly contradictory to the finding here. This Court did not have before it the opinion of the Circuit Court of Appeals for the Ninth Circuit in the Waxham case although copies were furnished just as quickly as it was possible to deliver them. A certified copy of the opinion of that Court of Appeals in the Waxham case has now been filed with the Clerk of this Court of Appeals, together with additional printed copies, and copies of that opinion have been furnished to counsel for Snow.

5. So far as concerns the specific questions of fact, the Circuit Court of Appeals for the Ninth Circuit, on page 5 of its printed opinion, holds:

> "The appellant seeks to avoid the claim of infringement by reason of the fact that the eggs in his machine are not placed in a single column with the fresh eggs at the top and eggs, which are hatching at the bottom, but are distributed through the chamber without any endeavor to place them in this exact relationship. This difference is clearly immaterial where the air in a chamber is kept at a constant and uniform temperature and rapidly circulated. The result of currents of air moving with high velocity would be to transfer heat from the older eggs to the fresher and colder eggs in either event. The important thing is the high velocity of the air current, avoiding stagnation in the immediate vicinity of the eggs in later stages of incubation."

6. As to the general character and movement of the air currents in the Robbins and Snow machines, this Court's attention is directed to the discussion in the opinion of the Circuit Court of Appeals for the Ninth Circuit of the fans and current movement of air in the Robbins machine. A copy of the Robbins patent is attached to this petition and shows the general construction of the Robbins machine used by the defendant in the Waxham case except for the differences noted on page 5 of the decision of the Circuit Court of Appeals. A

comparison of this description, with the charts of defendant Snow's machines, Exhibits 12 and 13 (Rec., pp. 473-511), will show their substantial identity. The fans in the Robbins and Snow machines are the same design and size, rotate at the same speed, and are similarly located, both with respect to the walls of the chamber, and the egg trays (Rec., p. 96). Both Snow and Robbins "sandwich" the egg trays and do not move them until ready for hatching.

7. The presumption fairly arises, from the opinion's above-quoted difficulty, that this Court failed adequately to appreciate the fact that, as a body of air in defendant Snow's machine is moving in repeated cycles through the incubator, the order or arrangement of eggs is immaterial to the results secured. Admission by counsel for defendant-appellant Snow that the function of heat transfer is performed by the recycling currents of air in the Snow machine appears at page 194 of his brief, where it states:

> "Heat from the air is absorbed by the colder eggs and given up to the air by the warmer eggs."

Therefore, it unavoidably follows that in Snow's machine the recycling current of air, in passing over the eggs, necessarily acts as the heat transfer medium from old to fresh eggs. Again, this vital question, upon which plaintiff-appellant's contention of infringement was based and upon which this Court's opinion is silent, was thoroughly discussed by Circuit Judge Woolley of the Third Circuit in *Buckeye Incubator v. Hillpot*, 24 F. (2) 341, at page 344 (Book of Decisions, p. 74):

> "But when, as in Smith, the air moves in cycles through corridor and tiers it makes no difference after the first cycle which way it moves through the egg trays, whether from bottom to top or from top to bottom, or whether it first strikes warm eggs or first strikes cool eggs, for in every cycle after the first the current, when passing warm eggs, will gather up their heat units and carry them to the cool eggs precisely as claimed and will in the same way

> produce that uniformity of temperature which is the thing sought by the art and achieved by the invention."

To the same effect see the decision of the Court of Appeals of the Sixth Circuit in the Blum case, 27 F. (2) 333.

8. So far as concerns the arrangement and shifting of the egg trays during the incubation period: The immateriality of that step necessarily follows from the consideration that the order of eggs is immaterial in achieving the results of the Smith invention for, if the benefits of the Smith invention are secured with any arrangement of eggs in the recycling current, it can not be essential that a definite order be selected or maintained. In this respect, attention is called to the language of Circuit Judge Woolley in the Hillpot case, *supra*, at the middle of the right-hand column on page 342 (Book of Decisions, page 72):

> "Now, it had become a practice in incubation, born of convenience, not of necessity, to put fresh eggs at the top of the tiers and move them down as incubation progresses until the eggs that are about to hatch are at the bottom where the chicks can be taken out and the litter consequent upon hatching can be easily removed. This arrangement is not always followed. Sometimes trays of eggs in the more advanced stage of incubation are 'sandwiched' between trays of eggs in less advanced stage. These are arrangements of eggs 'at different levels'."

Clearly, Circuit Judge Woolley is right in finding that the arrangement of the trays or their shifting or the sandwiching of eggs of one stage between eggs of other stages is a matter of convenience and not of necessity.

9. It does not seem possible that this Court, except by inadvertence, would have expressed an opinion upon the question of recycling air currents and materiality of egg stages and egg shifting which is directly contradictory to the opinions of the Circuit Court of Appeals for the Third and Sixth Circuits, without making reference thereto and without distinguishing

therefrom, or taking direct issue therewith. The opinion of the Circuit Court of Appeals for the Ninth Circuit, handed down three days before the opinion of this case, substantially follows the opinions of the Third and Sixth Circuits and is directly contrary to the opinion herein, and, in the interest of comity and termination of litigation on the Smith patent (which will expire within a year) it is respectfully urged that plaintiff-appellee be permitted a rehearing upon the specific questions of fact upon which this Court different from the decisions of the Circuit Courts of Appeal for the Third, Sixth and Ninth Circuits.

10. If due consideration be given by this Court to such material matter of fact which obviously seems to have been inadvertently overlooked in its opinion, the logical result must be a conclusion of infringement. On the other hand, if the present decision of this Court stands, the inevitable result will be the reference of either this Snow case or of the Waxham case to the United States Supreme Court with consequent vexatious continuance of this litigation. Furthermore, this Court is advised that, within this Eighth Circuit are located at least forty-six hatcheries with a total of not less than 239 Robinson incubators which are substantially identical with those enjoined in the Waxham case. These Robbins incubators located within this judicial circuit have a combined egg capacity of over five million eggs. The doctrine of *stare decisus* will substantially control the question of infringement of the Smith patent by these Robbins users in those cases. The embarrassing situation will, therefore, arise that this Court of Appeals and the District Courts in this circuit may be required to hold adversely to those prospective defendants in direct conflict with the ruling in this case now at bar; or, as an alternative, overruling the Circuit Court of Appeals for the Ninth Circuit upon the identical questions of infringement which were decided by that Court in the Waxham case.

The above considerations are believed to be urgent and compelling and an early rehearing of the question of infringement of Claim 1 is requested.

Respectfully submitted,

A. L. ELY,

Attorney for Plaintiff-Appellee.

Of Counsel:

A. C. PAUL,

MAURICE M. MOORE.

Minneapolis, Minnesota,
April 24, 1934.

The undersigned, counsel for plaintiff-appellee, certify that the above petition for rehearing is, in our judgment, meritorious and based upon adequate and sufficient reasons, and is not for the purpose of delay.

A. C. PAUL,

A. L. ELY,

MAURICE M. MOORE,

Counsel for Plaintiff-Appellee.

1002 Sept. 24, 1929. J. L. ROBBINS 1,728,980

INCUBATOR

Filed Feb. 6, 1928

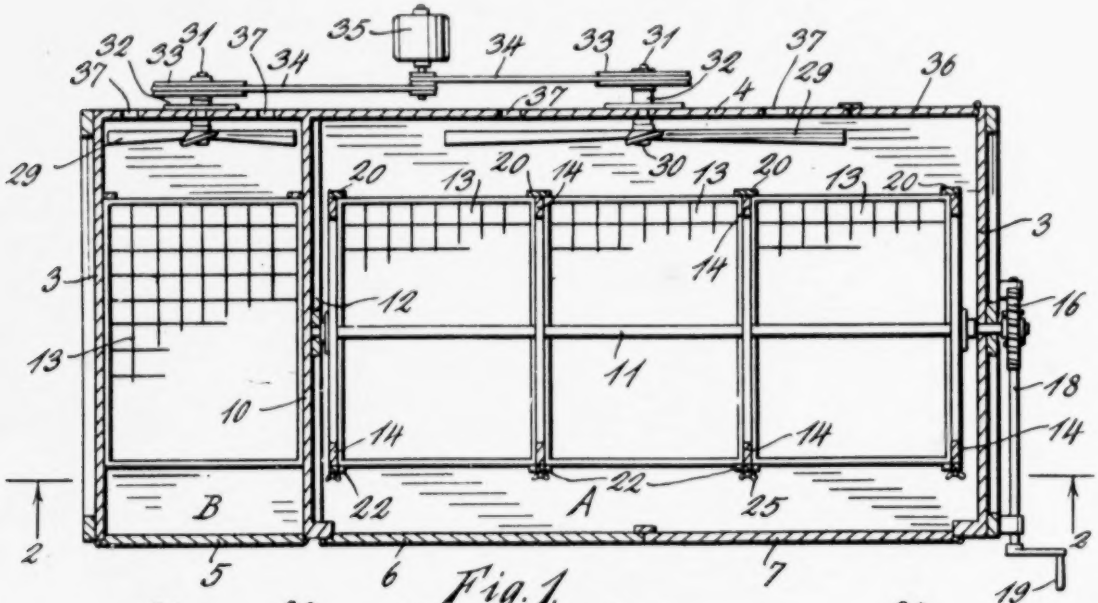

Fig. 1.

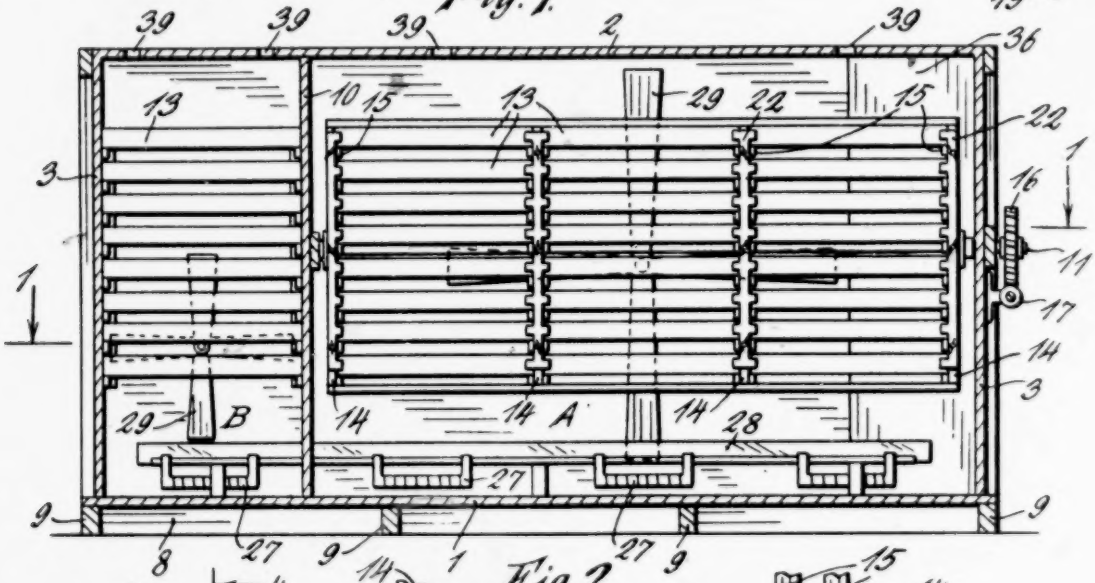

Fig. 2.

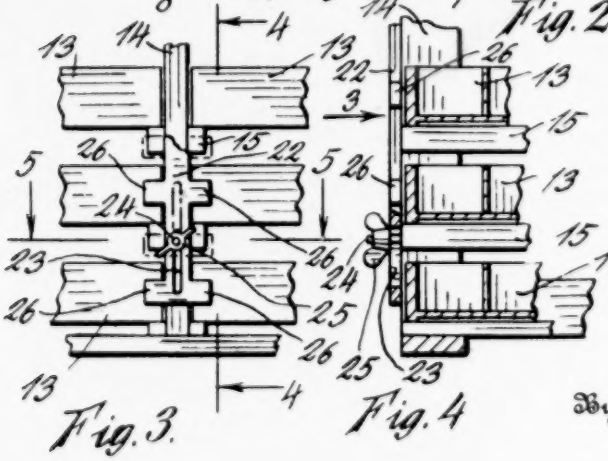

Fig. 3.

Fig. 4.

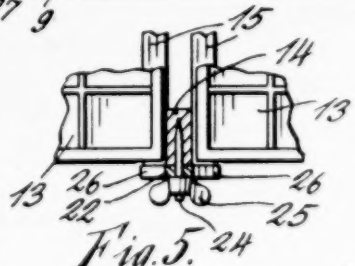

Fig. 5.

Inventor

John L. Robbins.

By A. J. O'Brien

Attorney

Patented Sept. 24, 1929

REISSUED

UNITED STATES PATENT

JOHN L. ROBBINS, OF EDGEWATER, COLORAD

INCUBATOR

Application filed February 6, 1928. Serial No. 252,136.

This invention relates to improvements in incubators, and has reference more particularly to an improved incubator of the type described and claimed in my copending application Serial No. 204,673, filed July 11, 1927.

In my present application the ventilating fans have been located at the rear of the incubator so as to blow the air transversely instead of longitudinally. It has been found that by this means a very satisfactory circulation of air is obtained and it is also possible to repair and replace the propellers without disturbing the eggs while when the propellers are located at the ends of the hatching trays, they are inaccessible and therefore very difficult to take care of.

In order to more clearly describe my invention reference will now be had to the accompanying drawing in which it has been illustrated and in which:

Fig. 1 is a horizontal section taken on line 1—1, Fig. 2;

Fig. 2 is a section taken on line 2—2, Fig. 1;

Fig. 3 is a front elevation looking in the direction of arrows 3 in Fig. 4;

Fig. 4 is a section taken on line 4—4, Fig. 3, and

Fig. 5 is a section taken on line 5—5, Fig. 3.

My improved incubator comprises a floor 1, a top 2, end members 3, a rear wall 4 and a front comprising doors 5, 6 and 7. The floor 1 is separated from the supporting surface 8 by means of transverse timbers 9. A partition 10 separates the interior of the incubator into two compartments, A and B. Compartment A contains the incubating trays

will not be described in
construction is not ma
tion. The frame mem
ably secured to shaft 1
of this shaft I have sec
that is engaged by a w
end of shaft 18. A cra
outer end of shaft 18
rotated, shaft 11 will a
this means the egg tray
axis of shaft 11.

Attention is called
means employed for lat
sition. Strips 20 are se
of the frame members
which prevent the tra
rearwardly. For the p
trays against forward
cured to the front ver
frames 14 a bar 22 wh
plurality of longitudi
which the screws 24 ext
provided with wing
clamp the bars 22 in adj
bars are provided wit
extend over the forwa
when bar 22 is in the fu
in Fig. 3, but which o
position when the bar
When these lugs are i
tion, the trays can be
to be easily removed a
eration of this latching
clearly illustrated in
cated within the incub
ers 27 by means of wh
incubator is maintaine

with transversely ex-
porting egg trays, egg
slides, a fan located
egg tray rack and the
rtment and rotatable

J. L. ROBBINS

1,728,980

INCUBATOR

Filed Feb. 6, 1928

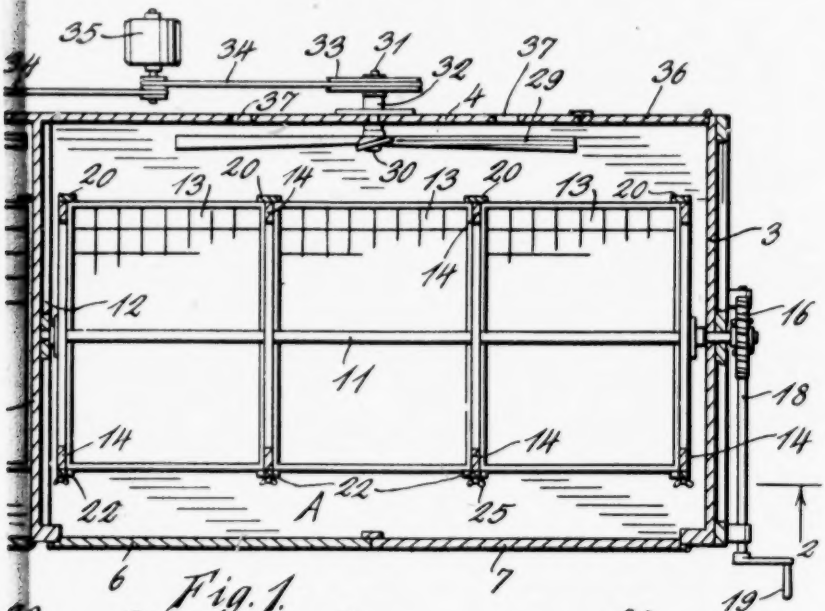

Fig. 1.

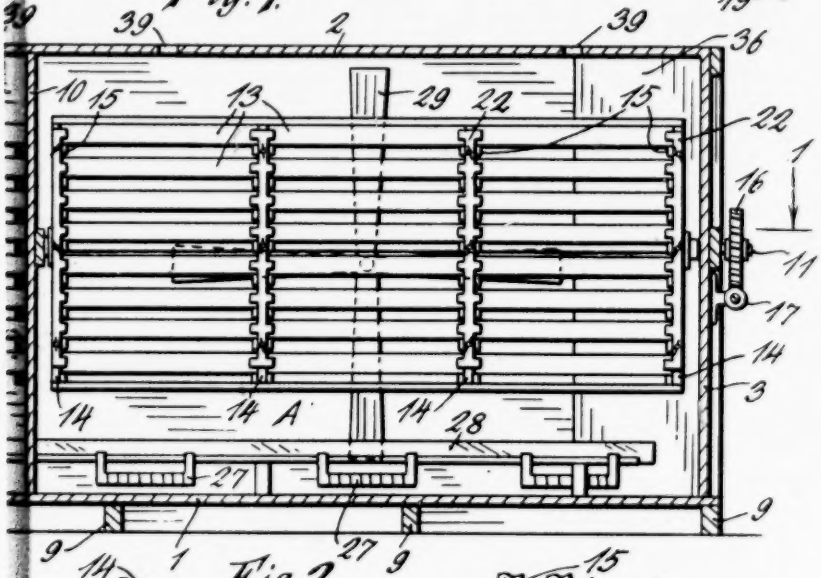

Fig. 2.

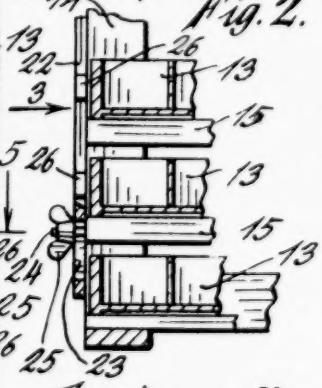

Fig. 4

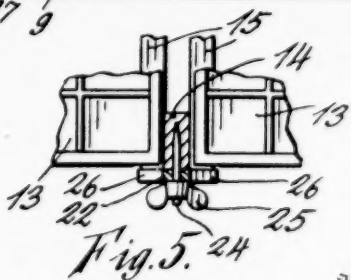

Fig. 5.

Inventor

John L. Robbins.

By A. J. O'Brien

Attorney

Patented Sept. 24, 1929

REISSUED

1,728,980

1003

UNITED STATES PATENT OFFICE

JOHN L. ROBBINS, OF EDGEWATER, COLORADO

INCUBATOR

Application filed February 6, 1928. Serial No. 252,136.

This invention relates to improvements in incubators, and has reference more particularly to an improved incubator of the type described and claimed in my copending application Serial No. 204,673, filed July 11, 1927.

In my present application the ventilating fans have been located at the rear of the incubator so as to blow the air transversely instead of longitudinally. It has been found that by this means a very satisfactory circulation of air is obtained and it is also possible to repair and replace the propellers without disturbing the eggs while when the propellers are located at the ends of the hatching trays, they are inaccessible and therefore very difficult to take care of.

In order to more clearly describe my invention reference will now be had to the accompanying drawing in which it has been illustrated and in which:

Fig. 1 is a horizontal section taken on line 1—1, Fig. 2;

Fig. 2 is a section taken on line 2—2, Fig. 1;

Fig. 3 is a front elevation looking in the direction of arrows 3 in Fig. 4;

Fig. 4 is a section taken on line 4—4, Fig. 3, and

Fig. 5 is a section taken on line 5—5, Fig. 3.

My improved incubator comprises a floor 1, a top 2, end members 3, a rear wall 4 and a front comprising doors 5, 6 and 7. The floor 1 is separated from the supporting surface 8 by means of transverse timbers 9. A partition 10 separates the interior of the incubator into two compartments, A and B. Compartment A contains the incubating trays will not be described in detail as the specific construction is not material to this invention. The frame members 14 are nonrotatably secured to shaft 11 and to the outer end of this shaft I have secured a worm wheel 16, that is engaged by a worm 17 carried by one end of shaft 18. A crank 19 is secured to the outer end of shaft 18 and when shaft 18 is rotated, shaft 11 will also be rotated and by this means the egg trays are tilted about the axis of shaft 11.

Attention is called at this point to the means employed for latching the trays in position. Strips 20 are secured to the rear edges of the frame members 14 and serve as stops which prevent the trays from being pushed rearwardly. For the purpose of holding the trays against forward movement, I have secured to the front vertical members of the frames 14 a bar 22 which is provided with a plurality of longitudinal slots 23 through which the screws 24 extend. These screws are provided with wing nuts 25 and serve to clamp the bars 22 in adjusted position. These bars are provided with lateral lugs 26 that extend over the forward ends of the trays when bar 22 is in the full line position shown in Fig. 3, but which occupy the dotted line position when the bar is moved upwardly. When these lugs are in the dotted line position, the trays can be pulled forward so as to be easily removed and inserted. The operation of this latching means has been quite clearly illustrated in Figs. 3, 4 and 5. Located within the incubator are electric heaters 27 by means of which the interior of the incubator is maintained at the desired tem-

1004

hub has a shaft 31 that extends to the rear of the incubator and is rotatable in bearing 32. A pulley 33 is secured to the outer end of the shaft and this is connected by means of belt 34 to a motor 35. A similar fan is rotatably mounted in the rear of compartment B and the various parts have been indicated by the same reference numerals as they are identical, except in size. The incubator is provided with a door 36 by means of which the operator can enter into the space where the propeller is located so as to make necessary repairs. When the propellers are rotated, they will cause a current of air to flow from the rear towards the front of the compartments, thereby producing a thorough ventilation of the incubating and hatching trays. Located to the rear of each of these propellers are ventilating openings 37 through which fresh air enters the compartments, and in the top of the incubator I have provided openings 39 through which air may leave. By properly proportioning these openings, it is possible to maintain the air within the incubator fresh at all times and at the same time maintain it at the proper temperature and humidity.

Attention is called to the fact that by locating the fans to the rear of the tray sections, the air will have freer passage than if the propellers were located at the ends. This advantage is clearly apparent from an inspection of Fig. 2, from which it can be seen that in the direction in which the air flows there is no obstruction in the spaces between the trays, whereas if an attempt is made to blow the air longitudinally through the incubating trays in the manner shown in my copending application above referred to, the passages are obstructed by means of the frames that support the trays, and it is therefore very difficult to obtain a uniform circulation of the air especially where three or more sections of incubating trays are arranged end to end as is now common practice. The advantage described is also present in the hatching section and it has been found that a good reliable ventilation is of great importance for the best results both in the incubating and in the hatching sections.

Having described my invention what I claim as new is:

1. An incubator comprising an elongated compartment whose front side is formed by doors that may be opened and closed, an egg tray rack located within the compartment, said rack being supported by a shaft extending lengthwise of the compartment and lo- rear wall, and means for rotating the fan so as to produce an air current that travels from the fan towards the doors directly in front of the fan whereby the air will return towards the fan along the outside of the central air current.

2. An incubator comprising an elongated compartment whose front side is provided with doors that may be opened and closed, an egg tray rack located within the compartment, said rack being provided with transversely extending slides for supporting egg trays, egg trays carried on the slides, a fan located between the egg tray rack and the rear wall of the compartment and rotatable about a horizontal axis substantially perpendicular to the rear wall whereby when the fan is rotated it will produce an air current that travels through the egg tray rack between the superpositioned egg trays, and means for turning the eggs.

In testimony whereof I affix my signature.

JOHN L. ROBBINS.

1005 (Endorsed): Filed in U. S. Circuit Court of
peals, Apr. 30, 1934.

(Order Denying Petition for Rehearing.)

March Term, 1

Saturday, May 5, 1

This cause came on this day to be heard upon the pe
for a rehearing, filed by Counsel for Appellee.

On consideration whereof, it is now here ordered b
Court, that said petition for a rehearing of this cause,
and the same is hereby, denied.

May 5, 1934.

(Petition for Stay of Mandate.)

Now comes the plaintiff-appellee, Samuel B. Smith
prays this Court for a stay of issuance of the mand
this cause pending a petition for a writ of certiorari
United States Supreme Court.

Plaintiff-Appellee has ordered from the Clerk of
Court the necessary records in order to perfect its pe
for such writ of certiorari.

Respectfully submitte
MAURICE M. MOORE
Attorney for Plaintiff-Ap

Dated at Minneapolis, Minnesota, May 10, 1934.

Of Counsel
Paul, Paul & Moore.

(Endorsed): Filed in U. S. Circuit Court of Ap
May 10, 1934.

1006 (Order Staying Issuance of Mandate.)

May Term, 1

Friday, May 11, 1

On consideration of the motion of appellee for a st
the mandate in this cause pending a petition to th
preme Court of the United States for a writ of certi
It is now here ordered by this Court that the issuan
the mandate herein be, and the same is hereby, staye

a shaft 31 that extends to the rear
ubator and is rotatable in bearing
lley 33 is secured to the outer end
aft and this is connected by means
to a motor 35. A similar fan is ro-
ounted in the rear of compartment
e various parts have been indicated
me reference numerals as they are
except in size. The incubator is
with a door 36 by means of which
tor can enter into the space where
eller is located so as to make neces-
airs. When the propellers are ro-
y will cause a current of air to flow
rear towards the front of the com-
ts, thereby producing a thorough
on of the incubating and hatching
Located to the rear of each of these
are ventilating openings 37 through
sh air enters the compartments, and
p of the incubator I have provided
39 through which air may leave.
erly proportioning these openings,
ible to maintain the air within the
fresh at all times and at the same
intain it at the proper temperature
idity.
ion is called to the fact that by lo-
e fans to the rear of the tray sec-
air will have freer passage than if
llers were located at the ends. This
e is clearly apparent from an inspec-
g. 2, from which it can be seen that
rection in which the air flows there
truction in the spaces between the
ereas if an attempt is made to blow
gitudinally through the incubating
he manner shown in my copending
on above referred to, the passages
ucted by means of the frames that
he trays, and it is therefore very
o obtain a uniform circulation of
specially where three or more sec-
ncubating trays are arranged end to
now common practice. The advan-
ribed is also present in the hatching
d it has been found that a good re-
tilation is of great importance for
results both in the incubating and
tching sections.
g described my invention what I
new is:
incubator comprising an elongated
ment whose front side is formed by
t may be opened and closed, an egg
k located within the compartment,
being supported by a shaft extend-
hwise of the compartment and lo-
rear wall, and means for rotating the fan so as to produce an air current that travels from the fan towards the doors directly in front of the fan whereby the air will return towards the fan along the outside of the central air current.

2. An incubator comprising an elongated compartment whose front side is provided with doors that may be opened and closed, an egg tray rack located within the compartment, said rack being provided with transversely extending slides for supporting egg trays, egg trays carried on the slides, a fan located between the egg tray rack and the rear wall of the compartment and rotatable about a horizontal axis substantially perpendicular to the rear wall whereby when the fan is rotated it will produce an air current that travels through the egg tray rack between the superpositioned egg trays, and means for turning the eggs.

In testimony whereof I affix my signature.

JOHN L. ROBBINS.

1005 (Endorsed): Filed in U. S. Circuit Court of Appeals, Apr. 30, 1934.

(Order Denying Petition for Rehearing.)

March Term, 1934.

Saturday, May 5, 1934.

This cause came on this day to be heard upon the petition for a rehearing, filed by Counsel for Appellee.

On consideration whereof, it is now here ordered by this Court, that said petition for a rehearing of this cause, be, and the same is hereby, denied.

May 5, 1934.

(Petition for Stay of Mandate.)

Now comes the plaintiff-appellee, Samuel B. Smith, and prays this Court for a stay of issuance of the mandate in this cause pending a petition for a writ of certiorari to the United States Supreme Court.

Plaintiff-Appellee has ordered from the Clerk of this Court the necessary records in order to perfect its petition for such writ of certiorari.

Respectfully submitted,
MAURICE M. MOORE,
Attorney for Plaintiff-Appellee.

Dated at Minneapolis, Minnesota, May 10, 1934.

Of Counsel
Paul, Paul & Moore.

(Endorsed): Filed in U. S. Circuit Court of Appeals May 10, 1934.

1006 (Order Staying Issuance of Mandate.)

May Term, 1934.

Friday, May 11, 1934.

On consideration of the motion of appellee for a stay of the mandate in this cause pending a petition to the Supreme Court of the United States for a writ of certiorari, It is now here ordered by this Court that the issuance of the mandate herein be, and the same is hereby, stayed for

a period of thirty days from and after this date, and if within said period of thirty days there is filed with the Clerk of this Court a certificate of the Clerk of the Supreme Court of the United States that a petition for writ of certiorari, record and brief have been filed, the stay hereby granted shall continue until the final disposition of the case by the Supreme Court.

May 11, 1934.

1007 (Clerk's Certificate.)

United States Circuit Court of Appeals
Eighth Circuit.

I, E. E. Koch, Clerk of the United States Circuit Court of Appeals for the Eighth Circuit, do hereby certify that the foregoing transcript composed of two volumes, Volume I consisting of pages A to 424, inclusive; and Volume II consisting of pages 425 to 1006, inclusive, contains the transcript of the record from the District Court of the United States for the District of Minnesota as prepared and printed under the rules of the United States Circuit Court of Appeals for the Eighth Circuit, under the supervision of its Clerk, and full, true and complete copies of all the pleadings, record entries and proceedings, including the opinion, had and filed in the United States Circuit Court of Appeals, except the full captions, titles and endorsements omitted in pursuance of the rules of the Supreme Court of the United States in a certain cause in said Circuit Court of Appeals wherein E. H. Snow, and E. H. Snow, doing business as Snow's Hatcheries and Snow's Incubator Company, were Appellants, and Samuel B. Smith was Appellee, No. 9757, as full, true and complete as the originals of the same remain on file and of record in my office.

In Testimony Whereof, I hereunto subscribe my name and affix the seal of the United States Circuit Court of Appeals for the Eighth Circuit, at office in the City of St. Louis, Missouri, this sixteenth day of May, A. D. 1934.

(Seal)

E. E. KOCH,
Clerk of the United States Circuit Court of Appeals for the Eighth Circuit.

SUPREME COURT OF THE UNITED STATES

ORDER ALLOWING CERTIORARI—Filed October 8, 1934

The petition herein for a writ of certiorari to the United States Circuit Court of Appeals for the Eighth Circuit is granted. And it is further ordered that the duly certified copy of the transcript of the proceedings below which accompanied the petition shall be treated as though filed in response to such writ.

File No. 38,730. U. S. Circuit Court of Appeals, Eighth Circuit. Term. 102, Samuel B. Smith, Petitioner, vs. E. H. Snow and E. H. Snow, doing business as Snow's Hatcheries and Snow's Incubator Company. Petition for a writ of certiorari and exhibit thereto. Filed June 11, 1934. File No. 38,730. 102 O. T., 1934.

FILE COPY

JUN 11

CHARLES ELMORE

No. 102

Supreme Court of the United States

OCTOBER TERM, 1934.

SAMUEL B. SMITH,

Petitioner,

vs.

E. H. SNOW AND E. H. SNOW DOING BUSINESS AS SNOW'S HATCHERIES AND SNOW'S INCUBATOR COMPANY,

Respondents.

PETITION FOR WRIT OF CERTIORARI TO THE UNITED STATES CIRCUIT COURT OF APPEALS FOR THE EIGHTH CIRCUIT AND BRIEF IN SUPPORT THEREOF.

AMASA C. PAUL,
ALBERT L. ELY,
MAURICE M. MOORE,
Attorneys for Petitioner.

Hayward Brief Co., 601-7 Fourth Ave. So., Minneapolis

SUBJECT INDEX.

PETITION.

		Page
I.	Summary and Short Statement	2
	A. Parties and Subject-Matter	2
	B. Decisions Below	2
	C. Citation Prior Conflicting Decisions	3
	D. Brief History of Litigation	4
	E. Specific Question Presented	6
II.	Reasons Relied on for Allowance of Writ	14

BRIEF.

I.	Opinions Below	19
II.	Jurisdiction	19
III.	Concise Statement of Case	20
IV.	Specification of Assigned Errors	20
V.	Argument	21
	Point A	21
	C. C. A. Eighth in conflict with C. C. A. Ninth	21
	Point B	22
	C. C. A. Eighth in conflict with C. C. A. Third and Sixth	22
	Point C	23
	C. C. A. Eighth misconceived effect of recycling air in Smith patented process	23
	Point D	25
	C. C. A. Eighth failed to give Smith Claim 1 the scope to which entitled under the weight of authority	25
VI.	Conclusion	25

TABLE OF CASES AND STATUTES CITED.

	Page
Buckeye Incubator Co. vs. Blum, 27 F. (2) 333	3, 5, 9, 13, 23
Buckeye Incubator Co. vs. Boling, 46 F. (2) 965	5
Buckeye Incubator Co. vs. Cooley, 17 Fed. (2) 453	5
Buckeye Incubator Co. vs. Hillpot, 24 Fed. (2) 341	3, 5, 10, 13, 22, 24
Buckeye Incubator Co. vs. Petersime, 19 Fed. (2) 721	3, 5, 9, 23
Eibel Process Co. vs. Minn. & O. P. Co., 261 U. S. 45, 63	15, 25
McClain vs. Ortmayer, 141 U. S. 419, 425	16, 25
Miller Hatcheries, Inc., vs. Buckeye, 41 F. (2) 619	5
Paper Bag Patent Case, 210 U. S. 405, 418-419	15
Powers, Kennedy Contracting Corp. vs. Concrete Mixing and Conveyor Co., 282 U. S. 175, 177	19
Saranac Automatic Machine Corp. vs. Wirebounds Patents Co., 282 U. S. 704, 705	19
Smith vs. Jensma, 1 Fed. Sup. 999	6
Smith vs. Magic City Kennel Club, 282 U. S. 784, 785	19
Snow vs. Smith, unreported	5, 10
U. S. Code Annotated, Title 28, Sec. 347	19
Waxham vs. Smith, unreported	3, 5, 12, 13, 21, 24
Winans vs. Denmead, 15 How. 330, 341	16
Wolf vs. Buckeye Incubator Co., 296 F. 680	5

Supreme Court of the United States

OCTOBER TERM, 1934.

SAMUEL B. SMITH,

Petitioner,

vs.

E. H. SNOW AND E. H. SNOW DOING BUSINESS AS SNOW'S HATCHERIES AND SNOW'S INCUBATOR COMPANY,

Respondents.

PETITION FOR WRIT OF CERTIORARI TO THE UNITED STATES CIRCUIT COURT OF APPEALS FOR THE EIGHTH CIRCUIT.

To the Honorable the Chief Justice and Associate Justices of the Supreme Court of the United States:

Your petitioner, Samuel B. Smith, respectfully prays that a writ of certiorari issue to the United States Circuit Court of Appeals for the Eighth Circuit to review a decision and decree of that Court entered April 14, 1934 (R. 991), rehearing denied May 5, 1934 (R. 1005). A transcript of the record in the case, including the proceedings in said Circuit Court of Appeals is furnished herewith in accordance with Rule 38 of this Court.

I. SUMMARY AND SHORT STATEMENT OF MATTER INVOLVED.

A. Parties and Subject-Matter.

This is a patent infringement suit brought below in equity for infringement of United States Letters-Patent No. 1,262,860 for Improvements in Incubators (R. 425). The application therefor was filed by your petitioner, Samuel B. Smith, and the patent was granted to his assignee, The Buckeye Incubator Company, under which your petitioner Smith was a licensee. Later petitioner reacquired the patent and The Buckeye Incubator Company became the licensee.

This suit was brought by petitioner Smith against E. H. Snow and E. H. Snow doing business as Snow's Hatcheries and Snow's Incubator Company. Respondent Snow resides at Sleepy Eye, Minnesota, and operates a number of hatcheries in Minnesota and adjoining states in which he uses incubators involving the process of incubation of the Smith patent.

B. Decisions Herein Below.

The United States District Court for the District of Minnesota in this case held the patent valid and infringed (R. 20) while the Circuit Court of Appeals for the Eighth Circuit reversed the decree below and held the patent valid but not infringed (R. 984).

C. CITATION PRIOR CONFLICTING DECISIONS OF OTHER CIRCUIT COURTS OF APPEALS.

The decision of the Circuit Court of Appeals for the Eighth Circuit is in direct opposition to those of the Circuit Courts of Appeals for the Ninth, Third and Sixth Circuits upon the scope of claim 1 of the Smith patent. The construction and mode of operation of the devices used by the defendants in the Eighth and Ninth Circuits were substantially identical and the decisions of these two Circuits are irreconcilable. They represent two divergent views as to the true scope of claim 1 of the patent. The opinion of the Eighth Circuit is contained in the record filed herein (R. 984), and the decision in the Ninth Circuit in *Waxham vs. Smith, et al.,* is reprinted as an appendix to the brief accompanying this petition.

The case in the Third Circuit in which the identical question here involved was also involved, and in which the holding was in conformity to that of the Ninth Circuit, and adverse to that in the Eighth Circuit, was *Buckeye Incubator Company, et al., vs. Hillpot,* reported at 24 F. (2) 341. The cases in the Sixth Circuit constitute an earlier holding in the case of *Buckeye Incubator Co. vs. Petersime* (19 F. (2) 721), in which the decision was the same as the Eighth Circuit, and a later case, *Buckeye Incubator Co. vs. Blum* (27 F. (2) 333), in which, in a *per curiam* decision, the Sixth Circuit receded from its former holding and expressed a view conforming to the views of the Ninth Circuit.

There is, therefore, a distinct diversity of opinion between different Circuits such as justifies the granting of this petition. The Eighth Circuit stands alone upon the question here involved. The Ninth, Third and Sixth Circuits are

in harmony with one another and in disagreement with the Eighth Circuit.

Believing that the Eighth Circuit is wrong in its conclusions upon the scope of claim 1 of the patent in suit, and that the other Circuits named are right, your petitioner brings this petition, for determination of the single question upon which there is divergence of opinion, *i. e.*, the scope of claim 1. The specific point at issue will be more fully explained below.

D. Brief History of Prolonged Litigation of Smith Patent.

The patent in suit (R. 425) was filed October 26, 1916, and was issued April 16, 1918. It relates to a new and revolutionary process of incubation which has been widely copied by many infringers in all parts of the country. The importance of the patent is shown by the widespread litigation growing out of the patent. The process first perfected by Smith has been so sensational in its character and effect that it has given rise to extensive copying, and the owners of the patent have been required to bring numerous suits to enforce their rights. This litigation has extended over the entire lifetime of the patent. These incubators have a capacity of twenty-five to fifty thousand eggs.

In every litigation in which the patent has been involved Courts of Appeals of the various Circuits have held the patent valid. They have differed upon the scope to be given to the patent, some Courts conceiving of broad and some of narrow interpretations of the patent.

Claim 1 of the patent is the broadest and has been in every litigation. Only the decisions of the Circuit Courts of Appeals will be referred to below.

The cases in the Courts of Appeals are as follows:

Wolf vs. Buckeye Incubator Co., 296 F. 680 (C. C. A. 6).

Patent held valid and infringed as to all the claims.

Buckeye Incubator Co. vs. Cooley, 17 F. (2) 453 (C. C. A. 3).

All of the claims held valid and infringed.

Buckeye Incubator Co. vs. Petersime, 19 F. (2) 721 (C. C. A. 6).

Claims 1, 2 and 3 held valid but not infringed.

Buckeye Incubator Co. vs. Hillpot, 24 F. (2) 341 (C. C. A. 3).

Claims 1 and 2 in suit held valid but not infringed upon different grounds than those presented here.

Buckeye Incubator Co. v. Blum, 27 F. (2) 333 (C. C. A. 6).

Claims 1 and 2 in suit held valid but not infringed upon different grounds than those involved here.

Miller Hatcheries, Inc., vs. Buckeye, 41 F. (2) 619 (C. C. A. 8).

All claims held valid and infringed.

Buckeye vs. Boling, 46 F. (2) 965 (C. C. A. 6).

A case involving the doctrine of *res adjudicata*. Question of infringement here involved not decided but left "to be determined by the courts in which the cases are pending."

Waxham vs. Smith, unreported (C. C. A. 9).

Claim 1 found valid and infringed.

Snow, et al., vs. Smith (the instant case) (C. C. A. 8).

Claim 1 found valid but not infringed.

As stated above, the last two cases are in direct opposition upon the same question, and the Waxham case is in agreement with the holdings in the ~~Cooley~~ Hillpot case and also the opin-

ion in the Blum case, though in opposition to the previous ruling of the same Court (Sixth Circuit) in the Petersime case.

In addition to the above, the decision of Judge Cavanah of the District Court of Idaho (not appealed from) in the case of *Smith vs. Jensma* (1 Fed. Sup. 999), a case growing out of the Boling litigation, held with the prevailing view as expressed in the Blum and Waxham cases.

The decision of the District Court in the instant case was also in accordance with the prevailing doctrine but was reversed.

E. Specific Question Presented.

The irreconcilable conflict of judicial opinion, as reflected in the differing holdings upon the scope of claim 1, makes it essential that this Court rule upon the question presented, namely:

> **"Does an infringer avoid claim 1 of the patent by arranging the eggs in a different order, or by omitting the shifting of the eggs during the first 18 days of incubation?"**

The patent in suit is directed to a method and apparatus for the incubation of eggs. Claim 1 of the patent is directed to the method, and is as follows:

> "1. The method of hatching a plurality of eggs by arranging them at different levels in a closed chamber having restricted openings of sufficient capacity for the escape of foul air without undue loss of moisture and applying a current of heated air, said current being created by means other than variations of temperature and of sufficient velocity to circulate, diffuse and main-

tain the air throughout the chamber at substantially the same temperature, whereby the air will be vitalized, the moisture conserved and the units of heat will be carried from the eggs in the more advanced stage of incubation to those in a less advanced stage for the purpose specified."

This claim covers a method of hatching eggs which comprises as one step the setting of trays of eggs in superimposed tiers, or "at different levels" in a single chamber and in various stages of incubation. This means that eggs of various degrees of embryo development are found in the same room, a result which is secured by setting trays of eggs at short intervals. The total period of incubation is twenty-one days and the patent describes setting the eggs at intervals of three days, although this exact timing is not essential. When the incubator is filled there will be from twenty-five to fifty thousand eggs therein ranging from fresh eggs in which the embryo is just beginning to develop, to eggs in which the chick is hatching or approaching the hatching period. The point in setting eggs in staged incubation is that the thermal characteristics of eggs change with the progression of incubation. Until about the eleventh day eggs require the addition of heat to promote and maintain life; after the eleventh day more heat is given off by the animal organism within the egg than is required, and the egg must be cooled. The change throughout the process is gradual and reaches a very substantial amount toward the close of the process. The earlier condition of the eggs has been referred to in this litigation as "endothermic," or heat absorbing; the later condition as "exothermic," or heat discharging.

As a second step in the process, a current of air is pro-

pelled over all of the eggs by fans so that the air is circulated at "sufficient velocity to circulate, diffuse and maintain the air throughout the chamber at substantially the same temperature" as called for by the claim. The current of air acts as the medium by which "the units of heat will be carried from the eggs in the more advanced stage of incubation to those in a less advanced stage." The result is stated by the Circuit Court of Appeals for the Ninth Circuit:

> "• • • the Smith patent which utilizes the heat generated by the eggs in the last stages of incubation to heat the eggs in the earlier stages, and conversely, the lower temperature of the latter eggs to reduce the temperature of the eggs in the later stages."

An essential is that the process be carried on in a chamber in which the air circulates in repeated cycles so that passing over and over through the chamber the requisite transfer of heat will take place without destroying the necessary humidity of the surrounding air. This is expressed in the phraseology of the claim, "in a closed chamber having restricted openings of sufficient capacity for the escape of foul air without undue loss of moisture • • • whereby • • • the moisture (is) conserved." It may be noted that a certain amount of fresh air must be admitted in order to supply the necessary oxygen to maintain life in the embryos, which breathe through the shells, but the fresh air requirement is balanced against the necessity of moisture conservation, by admitting only a small percentage of fresh air to the chamber through small openings.

The body of air propelled by the fans in the incubator chambers of both the patent and the defendant below, is moving in endless closed cycles due to the fact that only a small percentage of air (about 1%) of the total amount in

commercial machines is being interchanged during the process.

Those Courts which have properly analyzed the Smith patent and its mode of operation have found that as the body of air moves in substantially closed cycles or currents in a continuous recirculation of air in endless paths, it is immaterial how the eggs are arranged. So long as the current of air in its closed path moves over all the eggs in the chamber, the transfer of heat from hot to cold eggs, which is the essential of the Smith patent, must take place.

Those Courts which have *not* understood or appreciated the necessary effect of the closed cycle of air, as the Sixth Circuit in the Petersime case and the Eighth Circuit in the Snow case, have held that the eggs must be arranged in a definite order and maintained in that order. The fact that the Eighth Circuit made no mention of, or reference to, the recycling movement of the air in the Smith and Snow machines, clearly indicates that it was never understood by the judges of that Court.

The contrariety of opinion by the Courts may best be analyzed when the statements of the Courts are paralleled (Italics ours):

THE SIXTH CIRCUIT IN THE PETERSIME CASE.	THE SIXTH CIRCUIT IN THE BLUM CASE.
"Looking to the language of the claims, as indeed to the device that Smith uses, it would seem that he had in mind a process by which the warm air taken into the corridor would be currently directed, *so as to strike first*	"In that opinion some acceptance was given to the theory that *there is no infringement, unless the circulating air strikes first those eggs which are in the last stages of incubation* and are generating the greatest heat.

the eggs in the more advanced incubation, take to them the additionally needed oxygen, and carry the heat units therefrom to other parts of the two compartments, thus effecting, in part, at least, a uniformity of temperature throughout the egg chambers."

In considering a construction where the main current of air is brought in from outside, and in thinking of only the first circuit which this air makes, that thought seems applicable.

Counsel now point out, with much force, that in a case where the air does not come in from the outside in large volume, and that in any case during the circuits after the first one, no one point in the circuit gets the air ahead of any other point, in an absolute way. Which point gets it first depends upon where we consider the circuit to begin. We think we need not consider the effect of this defect in the reasoning—if it is a defect—of our former opinion."

THE EIGHTH CIRCUIT IN THE SNOW CASE.

"The arrangement of the air currents ("columns") is repeatedly stated to be such as to carry the heat given off from the advanced eggs to

THE THIRD CIRCUIT IN THE HILLPOT CASE.

"The part with which we are first concerned is whether, as Hillpot urges, the claims must be held limited to a method which calls not

those less advanced. When this is considered in connection with the above arrangement of eggs at various stages of incubation, *it is difficult to see how the desired results can be secured except by a current of air passing first through the trays containing the most advanced eggs.* That is the way appellee has devised his apparatus; it is the only way revealed by the patent or in practice; and it is successful."

only for a current of heated air driven in a defined direction through a column of eggs but also *for a current which will first come in contact with warm eggs—those 'in the more advanced stage of incubation'—and then picking up additional thermal units pass on and carry them to the cool eggs—those 'in a less advanced stage.'* Undoubtedly that is the preferred method described and, certainly, that is the working of the apparatus of claim 4, not of the apparatus of claim 5. *But it is not the working of the methods defined by claims 1 and 2 for they are not so limited in terms."*

"But when, as in Smith, the air moves in cycles through corridor and tiers it makes no difference after the first cycle which way it moves through the egg trays, whether from bottom to top or from top to bottom, or whether it

first strikes warm eggs or first strikes cool eggs, for in every cycle after the first the current when passing warm eggs will gather up their heat units and carry them to the cool eggs precisely as claimed and will in the same way produce that uniformity of temperature which is the thing sought by the art and achieved by the invention."

THE NINTH CIRCUIT IN THE WAXHAM CASE.

"The appellant seeks to avoid the claim of infringement by reason of the fact that the eggs in his machine are not placed in a single column with the fresh eggs at the top and eggs which are hatching at the bottom, but are distributed through the chamber without any endeavor to place them in this exact relationship.

This difference is clearly immaterial where the air in a chamber is kept at

> a constant and uniform temperature and rapidly circulated. The result of currents of air moving with high velocity would be to transfer heat from the older eggs to the fresher and colder eggs in either event. The important thing is the high velocity of the air current, avoiding stagnation in the immediate vicinity of the eggs in later stages of incubation."

The Eighth Circuit recognized that claim 1 was of sufficient breadth to cover the Snow device when it said:

> "In its expression, claim 1 is broad enough to cover any circulation of heated air (ventilated and moistened) in a closed chamber (incubator) having a plurality of eggs 'arranged at different levels' which circulation will maintain the temperature, preserve vitality of the air, conserve moisture and carry the heat from the advanced eggs to those less advanced. It is with that claim only we are concerned for *if it is to be given the full scope of its expression it covers the accused device.* Appellee contends for a broad scope while appellants urge a very narrow scope," (Italics ours.)

but due to its failure to appreciate the obvious correctness of the holdings of the Blum, Hillpot and Waxham cases, held the Smith patent limited to the exact series of steps described in the specification.

Obviously claim 1 of the patent was intentionally drafted of sufficient scope to cover just what the Third and Ninth Circuits held that it did cover, and which the Sixth Circuit admitted was the fact.

In the instant case the District Court held (R. 22):

> "15. Claims 1 and 2 of the patent are not limited in their terms or by the proceedings in the Patent Office to the setting of the eggs which are in various stages of incubation in any order or sequence, nor to the shifting of eggs during the process, but on the contrary are of sufficient breadth to cover any arrangement of eggs in various stages of incubation."

The necessary conclusion from this premise—that the Snow incubator infringed—was reversed by the Court of Appeals in which reversal petitioner represents and maintains that the Court was in error.

II. REASONS RELIED ON FOR ALLOWANCE OF WRIT.

Your petitioner respectfully represents that:

A. The Circuit Court of Appeals for the Eighth Circuit has herein rendered a decision in conflict with the decisions of the Circuit Courts of Appeals for the Ninth, Third and Sixth Circuits upon the scope of claim 1 of this Smith patent.

B. The Circuit Court of Appeals for the Eighth Circuit in its opinion, restricted claim 1 of the patent beyond its clear and obvious meaning and intent by holding that the patent was limited to a definite order or arrangement of eggs.

C. The Circuit Court of Appeals for the Eighth Circuit

decided an important question of patent law in conflict with the weight of authority in holding that the patent was of no broader scope than the specific description of the specification, and, while stating that the claim was of sufficient breadth to cover the defendants' operation, refused to apply the rule of law set forth in the *Paper Bag Patent Case,* 210 U. S. 405-418-419:

> "An inventor must describe what he conceives to be the best mode, but he is not confined to that. If this were not so most patents would be of little worth. 'The principle of the invention is a unit, and invariable; the modes of its embodiment in a concrete invention may be numerous and in appearance very different from each other.' 2 *Robinson, Patents,* § 485. The invention, of course, must be described and the mode of putting it to practical use, but the claims measure the invention."

D. The Circuit Court of Appeals for the Eighth Circuit decided an important question of patent law in conflict with the weight of authority in failing to give claim 1 of the patent its normal and obvious meaning, and in failing to give to the patent the scope to which it is entitled in view of the real merit of the invention. In so doing it failed to apply the rule set forth in *Eibel vs. Minnesota,* 261 U. S. 45-63:

> "In administering the patent law the court first looks into the art to find what the real merit of the alleged discovery or invention is, and whether it has advanced the art substantially. If it has done so, then the court is liberal in its construction of the patent, to secure to the inventor the reward he deserves. If what he has done works only a slight step forward, and that which he says is a discovery is on the border line between mere mechanical change and real invention, then his patent,

if sustained, will be given a narrow escape, and infringement will be found only in approximate copies of the new device."

E. The Circuit Court of Appeals for the Eighth Circuit decided an important question of patent law in conflict with the weight of authority in sanctioning and permitting an obvious evasion of the Smith patent. Simply to alter or vary the order of egg arrangement does not destroy the useful purpose and objects secured by Smith. In so doing that Court did not follow the rule expressed in *McClain vs. Ortmayer,* 141 U. S. 419, 425:

> "It is true that, in a case of doubt, where the claim is fairly susceptible of two constructions, that one will be adopted which will preserve to the patentee his actual invention."

F. The Circuit Court of Appeals for the Eighth Circuit decided an important question of patent law in conflict with the weight of authority in holding that the defendant herein, having secured the results of the Smith invention by a mode of operations similar to that set forth in claim 1 of the patent, did not infringe, and in not construing the claim in accordance with its conceded scope, thereby failing to conform to the rule set forth in *Winans vs. Denmead,* 15 How. 330-341:

> "There being evidence in the case tending to show that other forms do in fact embody the plaintiff's mode of operation, and, by means of it, produce the same new and useful result, the question is, whether the patentee has limited his claim to one out of the several forms which thus embody his invention.
>
> Now, while it is undoubtedly true that the patentee may so restrict his claim as to cover less than what he

invented, or may limit it to one particular form of machine, excluding all other forms, though they also embody his invention, yet such an interpretation should not be put upon his claim if it can fairly be construed otherwise."

WHEREFORE, your petitioner respectfully prays that a writ of certiorari be issued out of and under the seal of this Court, directed to the Circuit Court of Appeals for the Eighth Circuit, commanding said Court to certify and send to this Court on a day certain to be therein designated, a full and complete transcript of the record and all proceedings of said Circuit Court of Appeals in this case, to the end that said cause may be reviewed and determined by this Court as provided by law, and that your petitioner may have such other and further relief or remedy in the premises as to this Court may seem appropriate, and that said judgment of said Circuit Court of Appeals may be reversed by this Honorable Court.

Dated June 5, 1934.

SAMUEL B. SMITH,
Petitioner.

By AMASA C. PAUL,
ALBERT L. ELY,
MAURICE M. MOORE,
Attorneys.

STATE OF MINNESOTA,

ss.

COUNTY OF HENNEPIN.

AMASA C. PAUL, being first duly sworn, says that he is one of the counsel for Samuel B. Smith, petitioner; that he assisted in the preparation of the foregoing petition, and that the allegations therein contained are true, as he verily believes.

AMASA C. PAUL.

Sworn and subscribed to before me this fifth day of June, 1934.

MAY FINNEGAN,
Notary Public,
Hennepin County, Minn.

(Notarial Seal)

My Commission Expires July 7th, 1937.

BRIEF IN SUPPORT OF PETITION FOR WRIT OF CERTIORARI.

I. OPINIONS BELOW.

The opinions of the District Court and of the Circuit Court of Appeals for the Eighth Circuit are found in the record (R. 20 and 984).

The opinion of the Circuit Court of Appeals for the Ninth Circuit in the unreported case of *Waxham vs. Smith* is printed as an appendix to this brief.

II. JURISDICTION.

The grounds of jurisdiction are:

A. The date of the judgment of the Circuit Court of Appeals to be reviewed is April 12, 1934 (R. 991), and the date of the decree to be reviewed is April 14, 1934 (R. 991-2). The petition for rehearing was filed April 30, 1934, and denied May 5, 1934 (R. 1005).

B. The judgment was rendered in a suit in equity brought under the patent statutes to determine the validity and infringement of Letters-Patent No. 1,262,860.

C. The statute under which jurisdiction is invoked is United States Code Annotated, Title 28, Section 347.

D. Cases believed to sustain the jurisdiction are:

Powers-Kennedy Contracting Corp. vs. Concrete Mixing & Conveyor Co., 282 U. S. 175, 177.

Saranac Automatic Machine Corp. vs. Wirebounds Patents Co., 282 U. S. 704, 705.

Smith vs. Magic City Kennel Club, 282 U. S. 784, 785.

III. CONCISE STATEMENT OF THE CASE.

The facts are sufficiently stated in the petition.

IV. SPECIFICATION OF ASSIGNED ERRORS INTENDED TO BE URGED.

The errors intended to be urged are:

A. The Circuit Court of Appeals erred in reversing the District Court and holding that the Snow incubator did not infringe claim 1 of the Smith patent-in-suit.

B. That the Circuit Court of Appeals for the Eighth Circuit erred in restricting claim 1 of the patent to a definite order or arrangement of eggs.

C. That the Circuit Court of Appeals for the Eighth Circuit erred in not holding the Smith patent valid and infringed.

D. That the Circuit Court of Appeals for the Eighth Circuit erred in ordering dismissal of the complaint.

E. That the Circuit Court of Appeals for the Eighth Circuit erred in not affirming the decree of the District Court; and

F. That the Circuit Court of Appeals for the Eighth Circuit erred in not granting the relief prayed in the bill of complaint.

V. ARGUMENT.

POINT A.

The erroneous decision and decree of the Circuit Court of Appeals for the Eighth Circuit is in irreconcilable conflict with those of the Circuit Court of Appeals for the Ninth Circuit in the Waxham case.

The decision of the Eighth Circuit states that claim 1 of the Smith patent does cover the accused device if given the full scope of its expression. But, that Court stated that it was difficult to see how the desired results of the method of claim 1 could be secured except by a current of air passing first through the trays containing the most advanced eggs. Therefore, it decreed non-infringement because the current of air in the accused device did not, in its first traverse of the cycle, pass over the most advanced eggs.

The decision and decree of the Circuit Court of Appeals for the Ninth Circuit in the Waxham case found infringement. That Court pointed out that infringement of claim 1 was not avoided by the distribution of the eggs through the chamber without endeavor to place them in a stage-relationship. That Court held that such staged relationship was clearly immaterial where the air in the chamber is kept at a constant and uniform temperature and rapidly circulated. That Court pointed out that the result of currents of air moving with high velocity would be to transfer heat from the older eggs to the fresher and colder eggs in either event.

In other words, the Eighth Circuit decision holds that the eggs must be arranged and maintained in a definite order to infringe claim 1 of the Smith patent, while the decision of the Ninth Circuit flatly holds that such arrangement is clearly immaterial. Because of those two different conclu-

sions, the Eighth Circuit decreed non-infringement and the Ninth Circuit decreed infringement.

These decisions are irreconcilable and conflicting.

POINT B.

The erroneous decision of the Circuit Court of Appeals for the Eighth Circuit is also in irreconcilable conflict with those of the Circuit Courts of Appeals for the Third and Sixth Circuits upon the question of the scope of claim 1.

The Eighth Circuit recognizes that claim 1 if given the full scope of its expression covers the accused device but, in construing the claim arbitrarily limits it to a definite and specific staged relationship of the eggs and, therefore, holds non-infringement. The Circuit Court of Appeals for the Third Circuit in its decision in the Hillpot case points out that the defendant Hillpot urged that the Smith claims must be limited to a current which will first come in contact with the warm eggs (in the more advanced stage of incubation) thereby picking up additional thermal units and pass on and carry them to the cool eggs in a less advanced stage. That Court of Appeals found such was the preferred method described but that such was not the working of the method defined by claim 1 because not so limited in terms. That Court also pointed out that it made no difference, after the first cycle, which way the air moves, whether first striking warm eggs or cool eggs because in every subsequent cycle the air current gathers up heat units from warm eggs and carries them to cool eggs

> "precisely as claimed and will in the same way produce that uniformity of temperature which is the thing sought by the art and achieved by the invention."

In other words, the Circuit Court of Appeals for the Third

Circuit squarely held that claim 1 of the Smith patent was not specifically limited to a particular arrangement of the eggs and, therefore, the contrary decision of the Circuit Court of Appeals for the Eighth Circuit is in direct conflict therewith.

The Circuit Court of Appeals for the Sixth Circuit in the earlier Petersime case handed down a decision which conformed to that of the Circuit Court of Appeals for the Eighth Circuit but the Circuit Court of Appeals for the Sixth Circuit in the subsequent Blum case receded from its earlier view and expressed a view conforming to that of the Ninth Circuit upon this point. Hence, the later decision in the Blum case by the Sixth Circuit is at variance with the decision of the Circuit Court of Appeals for the Eighth Circuit in the case at bar upon this very point.

POINT C.

The Circuit Court of Appeals for the Eighth Circuit erred because it misconceived the effect of the recycling air in the Smith patented process or method.

If the main body of air, as in Smith, is recycling over and over again through the eggs in various stages of incubation, the purpose set forth in the closing lines of claim 1—

> "whereby the units of heat will be carried from the eggs in the more advanced stage of incubation to those in a less advanced stage—"

will be carried out whatever be the order of egg arrangement.

The error into which the Eighth Circuit fell is explainable only upon a misconception of the recycling movement of the air in Smith or upon a failure to understand the true operation of the process. When one understands the circuit of

air and the logical and inevitable effect of the recycling movement of the main body of air, it immediately becomes apparent that a specific or definite order of egg arrangement is not essential. If the stream of air is moving in a circle, as it is in Smith, then during such circular movement it will pass over hot and cold eggs. The hot eggs will give up their heat to the cold eggs and the cold eggs will absorb the heat from the current of air no matter in what order they are placed. Just as long as the stream of air moves in that cycle the heat of the hot eggs will be conveyed to the cold eggs. The position of the fan in the cycle is wholly immaterial. The fan is the mere instrumentality by which the cycle of air is maintained in motion.

It is difficult to see how so obvious a fact would have escaped the Eighth Circuit; nevertheless, we find that Court basing its opinion upon a total lack of understanding of so simple a fact. That Court says

> "it is difficult to see how the desired results can be secured except by a current of air passing first through the trays containing the most advanced eggs."

Several identical answers are found in the discussions by the other Circuit Courts of Appeals, relative to the cycle-movement of air appearing in the Hillpot case (C. C. A. 3), the Blum case(C. C. A. 6) and the Waxham case (C. C. A. 9). A further answer is found in the fact that Snow and Waxham both obtained the equalization of temperature without the precise order of egg arrangement of the Smith patent, and without the progressive movement of Smith.

If, as held by the decisions of the various Circuit Courts of Appeals, other than that for the Eighth Circuit, the results will be secured by eggs in any arrangement, it follows as a necessary corollary of that fact that it is not essential

that a definite order be set up or maintained. It is not necessary, therefore, that the eggs be shifted as incubation progresses. Smith's claim 1 does not call for any definite order of egg arrangement or for progressively moving the eggs during the process. The Circuit Court of Appeals for the Eighth Circuit felt compelled arbitrarily to read these limitations into claim 1—only because of its failure to grasp the fact that in Smith the air moves in a closed cycle.

POINT D.

The Circuit Court of Appeals for the Eighth Circuit clearly erred, through misunderstanding, by failing to give the Smith patent claim 1 the scope to which it is entitled in view of the real merit of the invention.

That Court failed to apply the rule set forth in *Eibel Process Co. vs. Minnesota & O. Paper Co.*, 261 U. S. 45-63. Likewise, it did not follow the rule expressed by this Court in *McClain vs. Ortmayer*, 141 U. S. 419-425, or in *Winans vs. Denmead*, 15 How. 338-341.

VI. CONCLUSION.

It is, therefore, respectfully submitted that a writ of certiorari should be issued as prayed for.

Respectfully submitted,

SAMUEL B. SMITH,
By AMASA C. PAUL,
ALBERT L. ELY,
MAURICE M. MOORE,
Attorneys.

CIRCUIT COURT OF APPEALS

NINTH CIRCUIT

April 9, 1934

No. 7154

HERBERT H. WAXHAM, DOING BUSINESS AS WAXHAM HATCHERIES,
Appellant and Cross-Appellee,

vs.

SAMUEL B. SMITH AND THE BUCKEYE INCUBATOR COMPANY,
Appellees and Cross-Appellants.

UPON APPEAL FROM THE DISTRICT COURT OF THE UNITED STATES FOR THE SOUTHERN DISTRICT OF CALIFORNIA, CENTRAL DIVISION.

BEFORE WILBUR, SAWTELLE AND GARRECHT, *Circuit Judges.*

WILBUR, *Circuit Judge.*

This suit was brought by Samuel B. Smith, patentee, and The Buckeye Incubator Company, a licensee, under patent No. 1,262,860, issued April 16, 1918, for an incubator, against Herbert H. Waxham for the infringement of said patent by the use of an incubator known as Robbins No. 23 incubator purporting to be manufactured under and pursuant to patent No. 1,728,980, issued September 24, 1929 to

J. L. Robbins. The matter was referred to a special master who reported that the Smith patent was valid and was infringed. This decision was affirmed by the District Court and defendant appeals from the decree. Samuel B. Smith and The Buckeye Incubator Company also appeal from that portion of the decree which held that the defendant did not infringe claim No. 2 of the patent. The Smith patent has been so frequently before the courts and so often described in the numerous opinions filed that we will curtail our description so far as possible.

The claim of the appellees is that the Smith patent and method have completely revolutionized the art of hatching eggs in incubators. In support of that contention they point out that since the patent was issued more than $20,000,000 worth of incubators manufactured thereunder have been sold with a total capacity of over 159,000,000 eggs.

The art of hatching eggs by incubators is old. The claim advanced is that under all the old methods a relatively small number of eggs could be placed in the incubator at one time; that by the method described in the Smith patent it is possible to increase the number of eggs in the incubator at one time, almost indefinitely, incubators manufactured under the patent having a capacity of from 25,000 to 50,000 eggs being in common use. The claims of the invention which are involved in this action are Nos. 1 and 2, as follows:

> "1. The method of hatching a plurality of eggs by arranging them at different levels in a closed chamber having restricted openings of sufficient capacity for the escape of foul air without undue loss of moisture and applying a current of heated air, said current being created by means other than variations of temperature and of sufficient velocity to circulate, diffuse and maintain the air throughout the chamber at substantially

the same temperature, whereby the air will be vitalized, the moisture conserved and the units of heat will be carried from the eggs in the more advanced stage of incubation to those in a less advanced stage for the purpose specified.

2. The method of hatching a plurality of eggs by arranging them at different levels in a closed chamber having restricted openings of sufficient capacity for the escape of foul air without undue loss of moisture and applying a power driven current of heated air in an adjacent chamber through openings into the egg chamber, said current being of sufficient velocity to circulate, diffuse and maintain the air throughout the egg chamber at substantially the same temperature, whereby the air will be vitalized, the moisture conserved and the units of heat will be carried from the eggs in the more advanced stage of incubation to those in a less advanced stage for the purpose specified."

In the incubation of eggs they begin to give off heat and to absorb oxygen and give off carbon dioxide about the fifth day. Up to that time it is necessary to supply artificial heat to start the process of incubation. Thereafter it is essential to supply the necessary oxygen and remove the carbon dioxide, and also to remove the heat developed by the egg itself. The removal of heat from the eggs was ordinarily accomplished by reducing the temperature in the incubator so that a circulation of air was produced by the heated air arising from the egg being replaced by the colder air enclosed in the incubator, that is, by convection. The Smith method of incubation instead of relying upon the gentle currents of air thus produced contemplates a large volume of air in an enclosed chamber kept at a uniform temperature of from 100

to 105° circulated by means of fans with such great velocity that it prevents the building up of small quantities of superheated air in immediate contact with the eggs generating heat during the last stages of incubation. The same movement of air which removes the excess heat from the egg also removes the carbon dioxide in immediate contact with the shell of the egg and replaces it with air in the average condition of heat, moisture and purity in the incubator. The temperature of the air in the incubator is regulated by thermostatic control, additional heat being necessary to that supplied by the eggs in the latter stages of incubation. To get rid of the excess carbon dioxide given off by the hatching chicks, a small vent from the large incubator chamber is provided and from the vent a small amount of air is constantly escaping, being replaced by fresh air drawn in by the ventilating fan and forced into the incubating chamber to mix with the large volume of air which is being constantly circulated by the fan. The recirculation of the air tends to conserve the moisture in the eggs and reduce the cost and simplify the method of heating. Apparently the key to the problem of incubation in mammoth incubators by what is known as staged incubation, lay in the ability to maintain a constant temperature in the incubating compartment. To do this it is necessary that the air currents in the incubator move with comparatively high velocity. This velocity in the Smith machine is obtained by a number of comparatively small electric fans. In the operation of the Smith machine the velocity of the column of air leaving the fan is about 1,200 feet per minute. Its speed when it enters the region of the hatching trays is approximately 250 feet per minute, up through the hatching trays from 20 to 40 feet per minute, up through the tilting trays varies from 50 to 60 to as high as 150 feet per minute, and as the column of air returns to

the fan where it crosses the beams at the top is approximately 500 feet per minute. In the machines manufactured under the Smith patent the fresh eggs are placed at the top of the column and the eggs in the last stages of incubation are at the bottom, the eggs being lowered from day to day as the chicks are moved from the lower boxes.

The validity of this patent has been sustained in every decision heretofore rendered in which the patent has been involved. Three of the decisions were rendered by Circuit Courts of Appeals. *Buckeye Incubator Co. vs. Wolf,* 291 Fed. 253, affirmed in *Wolf vs. Buckeye Incubator Co.* (C. C. A. 6), 296 Fed. 680; *Buckeye Incubator Co. vs. Cooley* (C. C. A. 3), 17 F. (2d) 453; *Buckeye Incubator Co. vs. Blum,* 17 F. (2d) 456, affirmed (C. C. A. 6), 27 F. (2d) 333; *Buckeye Incubator Co. vs. Petersime* (C. C. A. 6), 19 F. (2d) 721; *Buckeye Incubator Co. vs. Hillpot,* 22 F. (2d) 855, affirmed (C. C. A. 3), 24 F. (2d) 341; *Miller Hatcheries vs. Buckeye Incubator Co.* (C. C. A. 8), 41 F. (2d) 619. Notwithstanding these decisions the appellant contends that the patent is invalid on the ground that it was anticipated in the prior art and contends that some features of the prior art were not presented, or if presented were not considered in the decisions heretofore rendered sustaining the patent. In view of the decisions above referred to interpreting the Smith patent we deem it unnecessary to further discuss either the nature or character of the invention or to describe the method of incubation covered by the Smith patent or to attempt to define the limitations placed upon the patent by these decisions which in that regard are not entirely consistent.

One of the prior uses principally relied on by appellant is the Fullington prior use which is the only one relied on which has not been before the courts in prior cases involving the validity of the Smith patent. This device consisted of a

small incubator of the still air type adopted to hold approximately one hundred eggs in a single tray and at single setting to which Fullington attached a fan operated by dry cell batteries. The temperature in the incubator was controlled by a thermostat connected to the fan and when the temperature rose above a certain point the thermostat caused the fan to start up blowing fresh cool air into the incubator from the outside and discharging an equivalent amount of hot foul air out of the incubator through vents placed in the incubator for that purpose. When the temperature was reduced to the proper degree the thermostat acted to stop the fan. In the Fullington device there was no definite continuous current of air circulating as has been held to be essential in the Smith patent, but the fan operated only intermittently when the air in the incubator became too hot. Nor was the idea of staged incubation incorporated in the Fullington use as Fullington testified that all the eggs were set at the same time on a single tray and not with spaced tiers or layers of eggs one above the other in different stages of incubation. This fan attachment was used for only three settings when its use was abandoned and the incubator was thereafter used without it. The sole purpose sought to be obtained by the Fullington device was to keep the eggs from overheating and the Fullington prior use falls far short of anticipating the Smith patent which utilizes the heat generated by the eggs in the last stages of incubation to heat the eggs in the earlier stages, and conversely, the lower temperature of the latter eggs to reduce the temperature of the eggs in the later stages. The other prior use principally relied upon by the appellant to defeat the Smith patent is that by Lawry. Lawry did provide for a large chamber of heated air in which the eggs were placed. He did provide small vents above and below this chamber through which the

air entered and escaped from the incubating chamber. The air in the Lawry process was given some momentum by an electric fan but the effect of this momentum was almost entirely dissipated by the fact that the current of air was forced through a large number of small openings and escaped through similar openings to return through narrow passages to the fan to be again circulated through the incubation chamber. The obvious purpose of Lawry in this method of incubation was to supply fresh air without agitating the contents of the incubating chamber any more than was necessary to supply the fresh air. Apparently there was no effort to remove the heat from the incubating eggs by a current of high velocity. The plan was a failure and was abandoned and need not be further considered. We conclude that the Smith patent is valid.

The next question is whether it is infringed by the incubator used by the appellant Waxham purporting to be manufactured under the Robbins patent. Claims 1 and 2 of the Robbins patent are as follows:

> "1. An incubator comprising an elongated compartment whose front side is formed by doors that may be opened and closed, an egg tray rack located within the compartment, said rack being supported by a shaft extending lengthwise of the compartment and located closer to the front than to the rear wall, the rack being provided with transversely extending slides for supporting egg trays, egg trays carried on said slides, a fan located between the rear of the egg tray rack and the rear wall of the compartment and rotatable about a horizontal axis perpendicular to the rear wall, and means for rotating the fan so as to produce an air current that travels from the fan towards the doors directly in front of the fan whereby the air will return

towards the fan along the outside of the central air current.

2. An incubator comprising an elongated compartment whose front side is provided with doors that may be opened and closed, an egg tray rack located within the compartment, said rack being provided with transversely extending slides for supporting egg trays, egg trays carried on the slides, a fan located between the egg tray rack and the rear wall of the compartment and rotatable about a horizontal axis substantially perpendicular to the rear wall whereby when the fan is rotated it will produce an air current that travels through the egg tray rack between the super-positioned egg trays, and means for turning the eggs."

This patent contemplated the rotation of a large fan in the incubating chamber, thus generating air currents. The patent states that the currents travel directly forward from the fan toward the door and return along the walls of the chamber "along the outside of the central air current," that is to say, the patent contemplates currents of air generated by the fan moving from the fan through the eggs in the chamber and returning to the fan. This is exactly what is done by the method outlined in the Smith patent. The differences, however, are two: In the Smith patent the air moves in vertical columns passing downward from the fan and returning upward thereto. The two columns, that is, the down column and the up column, are separated by a curtain. The upward current is caused by the downward current striking the bottom of the incubator and mushrooming under the curtain and drawn upward by the suction of the fan and by the pressure of the downward column of air. According to the Robbins patent the same thing is accom-

plished without the curtain and the current revolves in a horizontal instead of a vertical plane. Obviously these differences are of no significance. They are mere substitutes for the plan in the Smith patent. If an improvement results from the elimination of the curtain it is nevertheless an infringement of the Smith patent. The machine operated by the appellant Waxham, however, does not operate in accordance with the claims of the Robbins patent. In fact, according to the findings of the master, the air currents move in exactly the opposite direction from that described in the patent; that is to say, the air is forced from the periphery of the large fan operating in the enclosed space to the walls of the incubating chamber and follows the side walls to the front doors where, striking those doors, it is deflected inward and then drawn to the center of the fans by the suction resulting from the outward movement of the air along the blades of the fan to their periphery. In actual operation the fan is large and moves with high velocity so that the current of air leaving the periphery of the fan and going outwardly along the walls of the chamber is moving about 900 feet per minute, its speed when it strikes the front wall of the chamber and turns inwardly is about 250 feet per minute, and as it passes through and around the trays on returning to the fan its speed varies from 40 to 350 feet per minute, increasing as it nears the vortex of the fan to as high as 600 feet per minute. There is a definite and continuous current of air utilized in the Waxham device moving at a velocity not materially different from the speed of the air current in the Smith patent and accomplishing substantially the same purpose.

The appellant seeks to avoid the claim of infringement by reason of the fact that the eggs in his machine are not placed in a single column with the fresh eggs at the top and eggs which are hatching at the bottom, but are distributed

through the chamber without any endeavor to place them in this exact relationship. This difference is clearly immaterial where the air in a chamber is kept at a constant and uniform temperature and rapidly circulated. The result of currents of air moving with high velocity would be to transfer heat from the older eggs to the fresher and colder eggs in either event. The important thing is the high velocity of the air current, avoiding stagnation in the immediate vicinity of the eggs in later stages of incubation.

The appellant relies upon the decision of the Circuit Court of Appeals in the Petersime case where it was held that a device which merely agitated the air in the incubating chamber did not infringe the Smith patent. We are not concerned with such a device in this case. We have indicated in another case recently filed that the findings of the master on the question of infringement, approved by the trial court, should be given great weight. *Stoody Co. vs. Mills Alloys,* 67 F. (2d) 807. In this case we are satisfied that the decision of the master is correct for the reasons we have stated, and for others which are more elaborately stated by the master and which we need not repeat.

With reference to the cross appeal of the plaintiffs we do not see how it can be seriously contended that the second claim of the patent is infringed and there is no argument thereon in the briefs. Claim 2 of the Smith patent contemplates a power driven current of heated air originating in an adjacent chamber and passing through openings into the egg chamber and in the Waxham device there is no adjacent chamber and the air currents are entirely within the enclosed chamber.

Decree affirmed.

(Endorsed): Opinion. Filed Apr. 9, 1934. Paul P. O'Brien, Clerk.

FILE COPY

FILED
AUG 7 1934
CHARLES ELMORE CROPLEY
CLERK

Supreme Court of the United States

OCTOBER TERM, 1934.

DOCKET NO. 102.

SAMUEL B. SMITH,

Petitioner,

vs.

E. H. SNOW, AND E. H. SNOW DOING BUSINESS AS SNOW'S HATCHERIES AND SNOW'S INCUBATOR COMPANY,

Respondents.

REPLY BRIEF FOR PETITIONER IN SUPPORT OF PETITION FOR WRIT OF CERTIORARI.

(Filed June 11, 1934.)

AMASA C. PAUL,
ALBERT L. ELY,
MAURICE M. MOORE,
Attorneys for Petitioner.

Hayward Brief Co., 601-7 Fourth Ave. So., Minneapolis

INDEX.

Page

Reply Brief in Support of Petition for Writ of Certiorari:
ARGUMENT:
POINT A 1
Basis of decision of Circuit Court of Appeals for the Eighth Circuit is its recited difficulty in understanding incubator operation except with specified egg-arrangement..... 1
POINT B 2
Air-moving instrumentalities of Snow (C. C. A. 8th) and Robbins (Waxham, C. C. A. 9th) incubators are identical and no difference in direction and character of air currents employed 2
POINT C 4
Order of egg-arrangement constitutes only conflict between decisions of Circuit Courts of Appeals for Eighth and Ninth Circuits 4

TABLE OF CASES.

Buckeye Incubator Co. vs. Blum, 27 F. (2d) 333..... 4
Buckeye Incubator Co. vs. Hillpot, 24 F. (2d) 341..... 5
Buckeye Incubator Co. vs. Petersime, 19 F. (2d) 721..... 4
Snow vs. Smith, 70 F. (2d) 564..... 1
Waxham vs. Smith, 70 F. (2d) 457..... 2

Supreme Court of the United States

OCTOBER TERM, 1934.

DOCKET NO. 102.

SAMUEL B. SMITH,

Petitioner,

vs.

E. H. SNOW, AND E. H. SNOW DOING BUSINESS AS SNOW'S HATCHERIES AND SNOW'S INCUBATOR COMPANY,

Respondents.

REPLY BRIEF FOR PETITIONER IN SUPPORT OF PETITION FOR WRIT OF CERTIORARI.

(Filed June 11, 1934.)

The Respondents' Brief in Opposition to the Petition for Writ of Certiorari merely emphasizes the irreconcilable conflict between the decisions of the Circuit Courts of Appeals for the Eighth and Ninth Circuits on the scope of claim 1 of the Smith patent.

POINT A.

BASIS OF DECISION OF CIRCUIT COURT OF APPEALS FOR THE EIGHTH CIRCUIT IS ITS RECITED DIFFICULTY IN UNDERSTANDING INCUBATOR OPERATION EXCEPT WITH SPECIFIED EGG ARRANGEMENT.

It is quite evident from reading the decision of the Eighth Circuit herein (R. 991 and 70 F. (2d) 564) that the hold-

ing for non-infringement was based upon one major factor. Snow arranged his eggs in a different order than Smith with respect to their ages of incubation. The Court specifically held that such an arrangement as adopted by Snow came within the scope of the claim, saying:

> "The statement of the claim is that the eggs are arranged 'at different levels.' This is broad enough to cover any arrangement at more than one level."

The Circuit Court of Appeals of the Eighth Circuit, however, did not see how the desired result—the equalization of temperature between the fresh, cold eggs and the older, hot eggs—could be secured unless the specific arrangement of the patent was adhered to, saying:

> "* * * it is difficult to see how the desired results can be secured except by a current of air passing first through the trays containing the most advanced eggs."

POINT B.

AIR-MOVING INSTRUMENTALITIES OF SNOW (C. C. A. 8TH) AND ROBBINS (WAXHAM, C. C. A. 9TH) INCUBATORS ARE IDENTICAL AND NO DIFFERENCE IN DIRECTION AND CHARACTER OF AIR CURRENTS EMPLOYED.

As to the direction and character of the air currents employed to secure the desired result, there can be no difference, for the air-moving instrumentalities in the Snow and Robbins (Waxham) incubators are identical.

There has been filed under Docket No. 208 in this Court on the 21st of July, a Petition for Writ of Certiorari in the Waxham case (*Waxham vs. Smith,* 70 F. (2d) 457), in which the incubator employed by Waxham is shown. By comparing the drawings and description of the devices, it will be seen that there is no difference in the design, size,

location or speed of rotation of the air-moving devices in the two machines.

The fans employed by Snow are best shown in Defendants' Exhibits L-3 and L-4 (Snow R., pp. 565 and 567). The fans employed in the Robbins (Waxham) incubators are best shown in Plaintiff's Exhibits 10 and 11 (R., Vol. 2, pp. 16 and 17).

In both cases the fans are of the same design, consisting of four radial blades. Two fans are arranged on one side wall of the incubator cabinet, the only difference being that, as the Snow incubator is larger, two pairs of fans are employed on opposite side walls, whereas in Robbins only one pair is employed. In Snow the fans are five feet in diameter and the blades set at 45° angle (Snow R., p. 91). In the Robbins machine the fans are five feet in diameter and the blades set at 45° (Waxham R., p. 156). In Robbins the fans rotate at from 200 to 220 r. p. m. (R., p. 156). In Snow they rotate at from 208 to 217 r. p. m. (Snow R., p. 85).

The two incubators are identical as to the construction, location and operation of the fans (Snow R., p. 96). It is inconceivable that such conformity were secured except that one infringer copied the other.

Being identical in every respect the operation of the fans is identical, and the movement of air created thereby in the two machines is the same. The air in each machine is drawn into the eye of the fan and discharged centrifugally along the walls, floor and ceiling until it returns to the center in the endless cycles. In both cases the velocity of the air and the direction of its flow through the eggs is the same. In both cases the air inlets for the small amount of fresh air are located in the side walls at the rear of the

fans, and in both cases the outlets for the small proportion of fresh air are located in the ceiling of the machine.

Exact correspondence between the air-moving instrumentalities is found. Beginning at the bottom of page 11 of the brief, Respondent says:

> "From the above it will be seen that the Eighth Circuit in the Snow case found as a fact that there was no general current movement of air in the Snow machine, but, on the contrary, there was merely a general diffusion of the air. On the other hand, the Ninth Circuit in the Waxham case found as a fact that there was a definite and continuous current of air used in the Waxham machine substantially the same as that of the Smith patent. These respective basic facts determined by the Circuit Courts of Appeals in the two different Circuits led the Eighth Circuit to declare that the patent was not infringed and led the Ninth Circuit to declare the patent was infringed."

This is manifestly in error.

POINT C.

Order of Egg Arrangement Constitutes Only Conflict Between Decisions of Circuit Courts of Appeals for Eighth and Ninth Circuits.

It is plainly evident that the Eighth and Ninth Circuits are in conflict on one question only, and that was stated in our petition. The order of egg arrangement was the stumbling block of the Eighth Circuit just as it was the stumbling block of the Sixth Circuit in the Petersime case. (*Buckeye Incubator Co. vs. Petersime,* 19 F. (2d) 721.) The Sixth Circuit corrected itself in the Blum case. (*Buckeye Incubator Co. vs. Blum,* 27 F. (2d) 333.) The Third and

Ninth Circuits were never deceived by the spurious argument that a new circuit was set up all the time. The amount of air exchanged is only about 1% in the Snow case and about the same in the Waxham case, and the main body of air is not affected in its function as a recirculating heat carrier by this interchange. This was the conclusion of the Sixth Circuit in the Blum case, the Third Circuit in the Hillpot case (*Buckeye Incubator Co. vs. Hillpot,* 24 F. (2d) 341) and the Ninth Circuit in the Waxham case. Only the Eighth Circuit adheres to the discredited theory that the heat interchange called for by the claim can only be performed when the eggs, in the different ages of incubation, are arranged in the order shown in the patent.

Attention is specifically directed to the copending Petition for Writ of Certiorari in the case of *Waxham vs. Smith,* referred to above. The instant case and that case clearly parallel one another, and the only conflict arising between the Eighth and Ninth Circuits is based upon the opposing views of these two Circuits as to whether the arrangement of eggs is the controlling factor which determines infringement.

For this reason we believe that the Writ of Certiorari should be granted, *but the question in issue should be restricted in both cases to the single point upon which alone the conflict of opinion is based, i. e., the effect of egg arrangement upon infringement.*

Dated August 2, 1934.

Respectfully submitted,

SAMUEL B. SMITH,
BY AMASA C. PAUL,
ALBERT L. ELY,
MAURICE M. MOORE,
Attorneys.

FILE COPY

NOV 10

CHARLES ELMORE

IN THE

Supreme Court of the United States,

OCTOBER TERM, 1934.

No. 102.

SAMUEL B. SMITH,

Petitioner,

v.

E. H. SNOW AND E. H. SNOW DOING BUSINESS AS SNOW'S HATCHERIES AND SNOW'S INCUBATOR COMPANY,

Respondents.

BRIEF ON BEHALF OF PETITIONER.

CHARLES NEAVE,
ALBERT L. ELY,
AMASA C. PAUL,
MAURICE M. MOORE,
Of Counsel for Petitioner.

November, 1934.

The Evening Post Job Printing Office, Inc., 134 Fulton St., New York, N. Y.

SUBJECT INDEX.

	PAGE
The Opinions Below	1
Statement of the Case	3
The patent in suit	3
The history of the invention	9
The Respondent's method	12
The Errors Assigned and to be Argued	16
Summary of Argument	16
ARGUMENT	
POINT I. The essentials of the Smith invention and what was accomplished	18
POINT II. The claim in issue requires no particular order or arrangement of eggs	24
POINT III. The claim in suit is not limited by the file wrapper proceedings to the specific arrangement of the eggs or to any of the other features upon which the respondent relies to escape infringement	26
POINT IV. The Respondent infringes	37
(1) Respondent's method is the same as the Smith method	37
(2) The claim is the criterion of infringement—not the specification	40
(3) The claim should not be limited so as to deprive the patentee of his actual invention	43
(4) The prior art emphasizes that Smith's claim should not be limited	45
(5) Neither adding improvements nor decreasing efficiency avoids infringement	52
(6) Respondent copied from Smith	56
Conclusion	59

TABLE OF CASES AND STATUTES CITED.

	PAGE
Baltzley *et al. v.* Spengler Loomis Mfg. Co. *et al.*, 262 F. 423-426 (C. C. A. 2d)	30
Boling *v.* Buckeye Incubator Co. *et al.*, 33 F. (2) 347 (D. C. S. D. Ohio)	3, 33
Buckeye Incubator Co. *v.* Blum, 17 F. (2d) 456 (D. C. N. D. Ohio)	2, 47, 54
Buckeye Incubator Co. *v.* Blum, 27 F. (2d) 333 (C. C. A. 6th)	2, 20
Buckeye Incubator Co. *v.* Boling, 46 F. (2d) 965 (C. C. A. 6th)	3, 33
Buckeye Incubator Co. *v.* Cooley (Unreported) (D. C. N. J.)	2
Buckeye Incubator Co. *v.* Cooley, 17 F. (2d) 453 (C. C. A. 3rd)	2, 18
Buckeye Incubator Co. *v.* F. & H. Hatchery (Unreported) (D. C. S. D., Ill.)	2
Buckeye Incubator Co. *v.* Hillpot, 22 F. (2d) 855 (D. C. N. J.)	2, 33
Buckeye Incubator Co. *v.* Hillpot, 24 F. (2d) 341 (C. C. A. 3rd)	2, 18, 19, 25, 33, 34, 46
Buckeye Incubator Co. *v.* Miller Hatcheries, Inc. (Unreported) (D. C. E. D., Mo.)	2
Buckeye Incubator Co. *v.* Petersime (Unreported) (D. C. S. D. Ohio)	2
Buckeye Incubator Co. *v.* Petersime, 19 F. (2d) 721 (C. C. A. 6th)	2, 20
Buckeye Incubator Co. *v.* Stone (Unreported) (D. C. Oregon)	2
Buckeye Incubator Co. *v.* Wolf, 291 F. 253 (D. C. N. D., Ohio)	2
Cantrell *v.* Wallick, 117 U. S. 689	55
Carnegie *v.* Cambria, 185 U. S. 403	36, 52
Cochrane *v.* Deener, 94 U. S. 780	52, 55
Cohn *v.* United States Corset Co., 93 U. S. 366	49

PAGE

Eibel *v.* Paper Co., 261 U. S. 45 44
Federal Trade Commission *v.* Pacific Paper Association, 273 U. S. 52 3
Gunning *v.* Cooley, 281 U. S. 90 3
Hoyt *v.* Horne, 145 U. S. 302 55
I. T. S. Co. *v.* Essex Co., 272 U. S. 429 27
Leeds & Catlin *v.* Victor Talking Machine Co., 213 U. S. 301 52
Los Angeles Art Organ Co. *v.* Aeolian Co., 143 F. 880 (C. C. A. 9th) 34
McClain *v.* Ortmayer, 141 U. S. 419 45
McDonough *v.* Johnson-Wentworth Co., 30 F. (2d) 375 (C. C. A. 8th) 42
Miller Hatcheries *v.* Buckeye, 41 F. (2d) 619 (C. C. A. 8th) 3, 18
Moore Filter Co. *v.* Tonopah Belmont Co., 201 F. 532 (C. C. A. 3rd) 53
Morley Machine Co. *v.* Lancaster, 129 U. S. 263 ... 44
Munising Paper Co. *v.* American, 228 F. 700 (C. C. A. 6th) 55
National Hollow B. B. Co. *v.* Interchangeable B. B. Co., 106 F. 693 (C. C. A. 8th) 31, 45
Otto Coking Co. *v.* Koppers, 258 F. 122 (C. C. A. 3rd) 55
Page *v.* Arkansas Gas Corporation, 286 U. S. 270, 271 3
Paper Bag Patent Case, 210 U. S. 405, 419 ..... 40, 41, 43
Reynolds Spring Co. *v.* L. A. Young Ind., 36 F. (2d) 150 (C. C. A. 6th) 55
Robinson on Patents, Sec. 485, Vol. II 42
Sec. 329, Vol. I 49
Sanitary Refrigerator Co. *v.* Winters, 280 U. S. 30 .. 3
Sewall *v.* Jones, 91 U. S. 171 56
Skelton *v.* Baldwin Tool Works, 58 F. (2d) 221 (C. C. A. 4) 34
Smith & Griggs Mfg. Co. *v.* Sprague, 123 U. S. 249-255 51

PAGE

Smith *v.* Jensma, 1 Fed. Sup. 999 (D. C. Idaho).... 3, 34
Smith *v.* Magic City Club, 282 U. S. 784..... 31
Smith *v.* Snow *et al.*, 17 Pat. Quar. 112-114 (D. C. Minn.) 39
Snow *v.* Lake Shore Railway Co., 121 U. S. 617.... 43
Snow *v.* Smith, 70 F. (2d) 564 (C. C. A. 8th)....25, 26, 40
Steele *v.* Drummond, 275 U. S. 199, 203..... 3
Stockland *v.* Russell, 222 F. 906 (C. C. A. 8th).... 55
Symington Company *v.* National Castings Co., 250 U. S. 384, 385 34
Temco Co. *v.* Apco, 275 U. S. 319..... 55
Tilghman *v.* Proctor, 102 U. S. 707..... 36
Union Tool Co. *v.* Wilson, 237 F. 837 (C. C. A. 9th). 55
Warner *v.* Pier Company, 278 U. S. 85..... 3
Waxham *v.* Smith, 70 F. (2d) 457 (C. C. A. 9th)..1, 4, 18, 21, 23
Webster *v.* Splitdorf Company, 264 U. S. 463..... 3
Westinghouse Elec. & Mfg. Co. *v.* Condit, 194 F. 427 (C. C. A. 2d)..... 29
William B. Scaife Co. *v.* Falls City Woolen Mills, 209 F. 210 (C. C. A. 6)..... 34
Winans v. Denmead, 15 How. 330-343.....41, 45, 56
Wolf *v.* Buckeye Incubator Co., 296 F. 680 (C. C. A. 6th) 2, 18

Revised Statutes, § 4888..... 41

In the

Supreme Court of the United States.

OCTOBER TERM, 1934.

No. 102

Samuel B. Smith,

Petitioner,

v.

E. H. Snow and E. H. Snow doing business as Snow's Hatcheries and Snow's Incubator Company,

Respondents.

BRIEF ON BEHALF OF PETITIONER.

The Opinions Below.

The present case comes before this Court on a Writ of Certiorari to the Circuit Court of Appeals for the Eighth Circuit (issued pursuant to U. S. C. A. Title 28, Section 347) to review the decision of that Court (70 F. (2d) 564 and Vol. II, p. 984) as to the scope of claim 1 of the patent to S. B. Smith, No. 1,262,860, dated April 16, 1918. The Court held that claim to be valid but *not infringed.*

In *Waxham* v. *Smith,* 70 F. (2d) 457, the Circuit Court of Appeals for the Ninth Circuit held the same claim of the patent here in suit to be valid and *infringed.* That case is now pending in this Court (No. 208).

This Smith patent has been the subject of extended litigation ever since its issuance, and many of the cases

have reached the several Courts of Appeals. In all of the cases, claim 1, here in issue, has been held to be valid. The following is a complete list of all the opinions, reported and unreported (except the two cases referred to above):

Buckeye Incubator Co. v. *Wolf,* D. C. N. D. Ohio W. D. (Westenhaver, *D.J.*) 291 F. 253;

Wolf v. *Buckeye Incubator Co.,* C. C. A. 6 (*J.J.* Denison, Mack and Donahue) 296 F. 680;

Buckeye Incubator Co. v. *Cooley,* D. C. N. J. Bodine, *D.J.*) Unreported;

Buckeye Incubator Co. v. *Cooley,* C. C. A. 3 (*J.J.* Buffington, Woolley and Dickinson) 17 F. (2) 453;

Buckeye Incubator Co. et al v. *Stone,* D. C. Oregon (Maguire, Master) Unreported;

Buckeye Incubator Co. et al. v. *Petersime,* D. C. S. D. Ohio W. D. (Hickenlooper, *D.J.*) Unreported;

Buckeye Incubator Co. et al v. *Blum,* D. C. N. D. Ohio E. D. (Westenhaver, *D.J.*) 17 F. (2) 456;

Buckeye Incubator Co. et al. v. Petersime, C. C. A. 6 (*J.J.* Denison, Moorman and Knappen) 19 F. (2) 721;

Buckeye Incubator Co. et al. v. *Hillpot,* D. C. N. J. (Bodine, *D.J.*) 22 F. (2) 855;

Buckeye Incubator Co. et al. v. *Hillpot,* C. C. A. 3 (*J.J.* Buffington, Woolley and Davis) 24 F. (2) 341;

Buckeye Incubator Co. et al. v. *Blum,* C. C. A. 6 (*J.J.* Denison, Moorman and Anderson) 27 F. (2) 333;

Buckeye Incubator Co. et al v. *F. & H. Hatchery,* D. C. S. D. Ill. (Fitzhenry, *D.J.*) Unreported;

Buckeye Incubator Co. et al. v. *Miller Hatcheries, et al.,* D. C. E. D. Mo. (Davis, *D.J.*) Unreported;

Boling v. *Buckeye Incubator Co. et al.*, D. C. S. D. Ohio, W. D. (Hough, *D.J.*) 33 F. (2) 347;
Miller Hatcheries et al. v. *Buckeye Incubator Co. et al.*, C. C. A. 8 (*J.J.* Booth, Gardner and Sanborn) 41 F. (2) 619;
Buckeye Incubator Co. v. *Boling*, C. C. A. 6 (*J.J.* Denison, Moorman and Hickenlooper) 46 F. (2) 965;
Smith et al. v. *Jensma et al.*, D. C. Idaho (Cavanah, *D.J.*) 1 Fed. Supp. 999.

Statement of the Case.

The sole question as to which there has been a conflict of decision in the lower courts is the proper scope of claim 1—that is, the conflict of decision has been as to infringement only. In all the Circuit Courts of Appeals which have discussed the Smith patent, the validity of the patent has been sustained. The defendant, respondent here, made no application for certiorari. We understand that, under these circumstances, this Court will consider the matter of infringement only. See

Webster v. *Splitdorf Company*, 264 U. S. 463, 464;
Federal Trade Commission v. *Pacific Paper Association*, 273 U. S. 52, 66;
Steele v. *Drummond*, 275 U. S. 199, 203;
Warner v. *Pier Company*, 278 U. S. 85, 91;
Sanitary Refrigerator Company v. *Winters*, 280 U. S. 30, 34;
Gunning v. *Cooley*, 281 U. S. 90, 98;
Page v. *Arkansas Gas Corporation*, 286 U. S. 270, 271.

The patent in suit:

The Smith patent in suit (Vol. II, p. 429) brings together for the first time in the art of incubation two major

steps which are the essential factors of successful mass incubation of eggs. *One of these steps* is the placing of eggs in an incubator at spaced intervals of time (instead of filling the incubator all at one time) so that, after being filled, the incubator contains, at all times, eggs ranging all the way from fresh eggs, to eggs which are approaching the completion of the incubation or hatching period. As hatched eggs are removed, they are replaced by fresh eggs. *The other major step* is the application of a forced draft of air to the eggs.

The period of hatching is twenty-one days and where the Smith process is being carried on, the chamber contains thousands of eggs of many ages or stages of advancement in the process of hatching. The reason for this, which is known as "staged incubation," is that, during the earlier portion of the hatching period, the eggs are cold and require the application of heat to generate and maintain life of the embryo therein, or, stated in another way, the eggs are "endothermic" or heat absorbing. After the eggs have reached the eleventh day and on through the balance of the hatching period, the embryos within the eggs have advanced to such an extent that they generate more heat than is required to keep the embryos alive, and an excess of heat flows therefrom, or the eggs become "exothermic" or heat generating (Vol. I, p. 61).

Were all of the eggs which it is possible to incubate in a single incubator by the Smith process, set at one time, it would be necessary to supply an excess of heat during the first half of the incubating period and then as the eggs approached the end of the hatching period, so much heat would be developed that it would be impossible to keep them from overheating and the chicks within the eggs would be killed by their self-generated heat (Vol. I, p. 138). By setting the eggs at short intervals the Smith patent (as was expressed by the Circuit Court of Appeals for the Ninth Circuit in *Waxham* v. *Smith,* 70 F. (2d) 457) "utilizes the heat gen-

erated by the eggs in the last stages of incubation to heat the eggs in the earlier stages, and conversely, the lower temperature of the latter eggs to reduce the temperature of the eggs in the later stages."

The heat requirements of the fresher eggs and the amount of heat given off by the older eggs are fixed by nature. As the egg content of the incubator is divided between these two classes of eggs, the one class balances the other, each acts as a complement of the other, and stabilization of heat is made possible by the current of air passing throughout the entire chamber. The process of incubation, therefore, progresses with a minimum of temperature control by the operator (Vol. I, p. 69).

The facts of heat requirement and heat development of eggs in the process of incubation have been known for centuries, but until the invention of the Smith process, that law of nature had never been utilized in a practical way. He was the first man who ever put the law of nature to work.

In order to accomplish the interchange of heat between the hot and cold eggs, Smith subjected the eggs placed in the incubator in a series of trays, one above another, to a current of air of sufficient velocity to effect the heat transfer, or, as expressed in claim 1 of the patent, so that "the units of heat will be carried from the eggs in the more advanced stage to those in a less advanced stage." In so doing Smith violated all previous notions and canons respecting incubation, for it had always been considered injurious to subject incubating eggs to a draft of air, and every precaution was taken to shield them from drafts (Vol. I, p. 62).

As to the nature of Smith's invention, the admission of respondent's witness (Vol. I, p. 301) is interesting:

> "Do you find any patent in the prior art that shows a general setting of eggs in stage-incubation, and the general application of forced air over those eggs—is there any patent or publication in the prior art, that shows that?"
>
> "No, no I don't think so."

Two of the essential steps of the Smith process therefore appear. They are

(1) Setting eggs in a single chamber or cabinet at successive times so that they will be in superposed layers of various ages of incubation. *This is staged-incubation.*

and

(2) The application of a current of air, propelled by means other than convection currents or natural drafts, over eggs in staged-incubation. *This is forced-draft.*

The point of the *forced* draft or current of air is that the air shall continuously be moving throughout all parts of the incubator so that all of the eggs shall be subjected to it, as distinguished from what would occur in the case of natural drafts or in the case of any mere agitation of the air, as, in these latter cases, there would be local stagnant places where the hot eggs would overheat and the cool eggs would remain too cold.

It is only by the combination of these two essential elements of staged-incubation and forced draft that the invention is accomplished. Staged-incubation alone will not do, for the requisite heat transfer can not be accomplished merely by relying upon convection currents, or localized air agitation, or radiation in a still air environment. A forced-draft alone will not do it. Only when staged-incubation and forced-draft meet and are combined is the invention secured.

It is a further essential that the process must be carried out in a substantially closed cabinet in which the air passes over and over the eggs in repeated circuits or closed cycles.

It is necessary to admit some fresh air to supply the embryos with the requisite oxygen which they breathe through the pores in the shells. On the other hand, the water content of the egg must be dried out *slowly*. If

dried out too rapidly the embryo would be killed. If, therefore, the relatively dry air from the outside passed through the chamber in large quantities, the eggs would dry out too rapidly for successful hatching (Vol. I, p. 71). So the claim provides, and the process is carried on in a room closed except for restricted openings to supply fresh air and to permit the escape of foul air without undue loss of moisture. This is described in the patent on page 2, lines 43 to 45 (Vol. II, p. 430):

> "The outlets 28 for the release of foul air are made of such restricted capacity as to prevent the undue escape of moisture."

This means that the air is passing in repeated cycles over and over again through the same mass of eggs. The moisture is conserved by this repeated cycle or circuit movement of the same body of air. The passage of the air in repeated cycles is described at page 2, lines 18-21 of the patent as follows (Vol. II, p. 430):

> "The longitudinal space 21 above the fans has open communication above the side walls 22 with the upper ends of the rack compartments behind the curtains * * *."

The air must pass in these repeated cycles over the eggs for there is only one small outlet opening shown on each side of the incubator (Fig. 1, Vol. II, p. 428).

This is the element of claim 1 of the patent, which calls for

> "a closed chamber having restricted openings of sufficient capacity for the escape of foul air without undue loss of moisture."

At this point the Court is warned against the optical delusion of Fig. 1 of the patent. The section of Fig. 1 is taken at the foul air outlet. There is only *one* foul air opening 28 in each side of the incubator as is shown by

Fig. 3. The amount of foul air which leaves the machine through such outlet is necessarily the same in quantity as the amount taken in, for obviously the pressure inside will remain the same as the pressure outside the machine. There is one fresh air opening over each fan and each of these openings is throttled by the adjustable slides 24 just below it. (Fig. 1.) As the patent says, page 2, lines 46-47:

> "It is possible to limit the openings and so conserve the moisture."

In the operation of the Smith commercial machines, this interchange of foul and fresh air is only *one-half of one per cent* of the total volume of air in circulation (Vol. I, p. 68).

It will also be observed that, if the air is moving in a closed cycle through the incubator, the position of the fan in that cycle is wholly immaterial. The fan is merely the instrumentality which maintains the cycle in motion, and the same body of air (except for the 1/200 part of fresh air) moves over and over through fan and eggs.

To illustrate our point assume for a moment that the Smith incubator cabinet were closed entirely so that no fresh air entered or foul air escaped. Then it would be apparent that the air moved in closed cycles, and, as hot and cold eggs were in that cycle, necessarily the heat interchange must take place. This result is not disturbed by opening of vents for a 1/200th portion of the air to escape to be replaced by an equivalent amount of fresh air in each cycle.

In the patent Smith described, as a specific method, the setting of the eggs at the top of columns and moving these eggs downwardly as incubation progressed so that, as the hatching day arrived, the chicks would hatch at the bottom and the litter be confined to the floor of the incubator (Vol. I, p. 67).

The history of the invention:

Dr. Smith, the patentee, prior to the invention was a country doctor living in Attica, Ohio. He became interested in the problems of incubation several years prior to the date of his completion of the invention (Vol. I, p. 134-139), and sought for a successful solution of the problem of mass incubation. He early tried the use of fans with incubators in an attempt to combat the excessive heat generated by the large masses of eggs with which he was experimenting. After considerable experimentation and failures he moved to Cleveland, Ohio, in the year 1913, and there built and operated, with indifferent success, a composite incubator composed of three *separate and distinct* chambers in which were located fans, but in each of which the eggs were set all at one time (Vol. I, p. 138). He found, however, even with increased circulation, that he was unable to prevent the compartments from getting so hot toward the end of the incubating period that "chicks would die in the shells from overheating" (Vol. I, p. 138). From this discouraging experience first came the conception of setting the eggs in the incubator cabinet at intervals, or in "staged incubation", and this conception he first put into use in the hatching season of 1915 (Vol. I, p. 136). When he first put into practise the conception of *combining staged incubation with the forced draft* he attained success *but this combination did not take place until the year 1915.* With this combination of the two essential elements of his invention success was assured.

The important thing that appears from the history of Dr. Smith's invention and the thing which should always be borne in mind is, that it was not until Dr. Smith added to and combined with his previous idea of forced draft, the important step of setting the eggs in staged incubation, that the invention was achieved.

At the same time that Dr. Smith added the step of staged incubation to his process he also added the cur-

tains 3 and 4 at the sides of the central corridor (Vol. I, p. 136) better to direct through the cabinet the *air currents* propelled by the small fans which he then employed. But *it was not the addition of curtains which turned Smith's prior failures to success, it was the addition of staged incubation which was the final step.* Had Dr. Smith only added the curtains to his previous efforts he would not have succeeded, for that addition would not have eliminated the disastrous overheating which is found when thousands of eggs all reach the hatching point at the same time. It was the addition of staged incubation or, stated in another way, the filling of the incubator in various stages of embryo development, which turned the table. *The intelligent use of the differing thermal properties of old eggs and fresh eggs by means of a forced draft of air solved the problem of egg incubation on a larger scale.* The curtains were merely a refinement of the apparatus, useful only when small fans are used.

Dr. Smith's testimony that he did not have the essential step of staged incubation in 1913 and 1914, must be accepted, for his testimony is undisputed. He is also corroborated by the newspaper articles concerning his incubator published in 1913 and 1914 introduced by the defendants (Vol. II, pp. 530-532). The article in the Cleveland Plain Dealer of February 23, 1913, is particularly clear that at that time he did not set his eggs in staged incubation, but set *each of the several separate compartments* at one time (Vol. I, p. 138).

The same is true of the article in the Cleveland Leader of Feb. 22, 1914 (Vol. II, p. 531), in which there is no disclosure of staged incubation.

The District Court in the present case made the following fact finding:

> "13. The Smith prior use and the publications thereof do not anticipate, as they do not disclose staged incubation" (Vol. I, p. 22).

This fact finding was not questioned by the Court of Appeals.

Staged incubation plus the forced draft, or current of air, made the new system; success immediately followed. Even before the patent issued Dr. Smith had licensed The Buckeye Incubator Company, an old and established incubator manufacturing concern, to make and sell incubators under his pending application. The license to that Company was confined to the smaller incubator units, Dr. Smith retaining for himself the right to use incubators of over 25,000 egg capacity (Vol. I, p. 79).

It is now possible successfully to operate a single incubator cabinet having a capacity of 52,000 eggs, a result undreamed of before the Smith invention. It had never been possible with the older methods to operate incubators averaging over 300 egg capacity (Vol. I, p. 61). The advantages in economy and efficiency are obvious.

For a period Dr. Smith operated his own hatchery using the larger incubator units, and developed the largest incubator establishment then in existence, with a total capacity of a million eggs (Vol. I, p. 56). Starting in the year 1922 Dr. Smith made and sold the larger units through The Smith Incubator Company. Up to and including the year 1932, the licensee, Buckeye, had sold well over $11,000,000 worth of incubators with a total egg capacity of over 98,000,000 eggs and Smith had sold over $12,000,000 worth of incubators with a total egg capacity of over 90,000,000 eggs. The combined sales of both concerns amounted to approximately $24,000,000 worth of incubators and over 188,000,000 egg capacity (Vol. II, p. 517).

To this enormous total must be added the value and egg capacities of the thousands of incubators which have been sold and used by the infringers who have taken the Smith invention and appropriated it to their own use and profit. The constant procession of infringers before the

Courts, utilizing the basic ideas of staged-incubation and forced-draft, further attests the value of the invention.

The Smith invention has made obsolete the old, single-layer, desk-like incubators which incubated the eggs in a still air environment in one layer and in a single batch or one stage of incubation. This type of incubator is no longer a factor in the industry. A new and very substantial industry has been built up under the Smith invention. Large hatchery establishments using the Smith process flourish over the country giving profitable employment to many.

The claim in issue of the patent in suit is as follows:

> "1. The method of hatching a plurality of eggs by arranging them at different levels in a *closed chamber* having restricted openings of sufficient capacity for the escape of foul air without undue loss of moisture and applying *a current of heated air,* said current being created by means other than variations of temperature and *of sufficient velocity to circulate, diffuse and maintain the air throughout the chamber* at substantially the same temperature, *whereby* the air will be vitalized, the moisture conserved and *the units of heat will be carried from the eggs in the more advanced stage of incubation to those in a less advanced stage* for the purpose specified."

The Respondent's method:

The respondent's incubator is a large cabinet or chamber the outside of which is shown at Vol. II, page 459, and the inside is shown at page 463. As there illustrated, there is a central corridor between two of a series of twelve columns of trays, each column holding twelve tilting trays and two stationary hatching trays, each tray containing about 140 eggs. The whole cabinet then contains 45,000 eggs. Comparative views of the egg tray racks in the Smith and respondent's incubators (Vol. II, pp. 447, 465) are here reproduced facing page 12, the

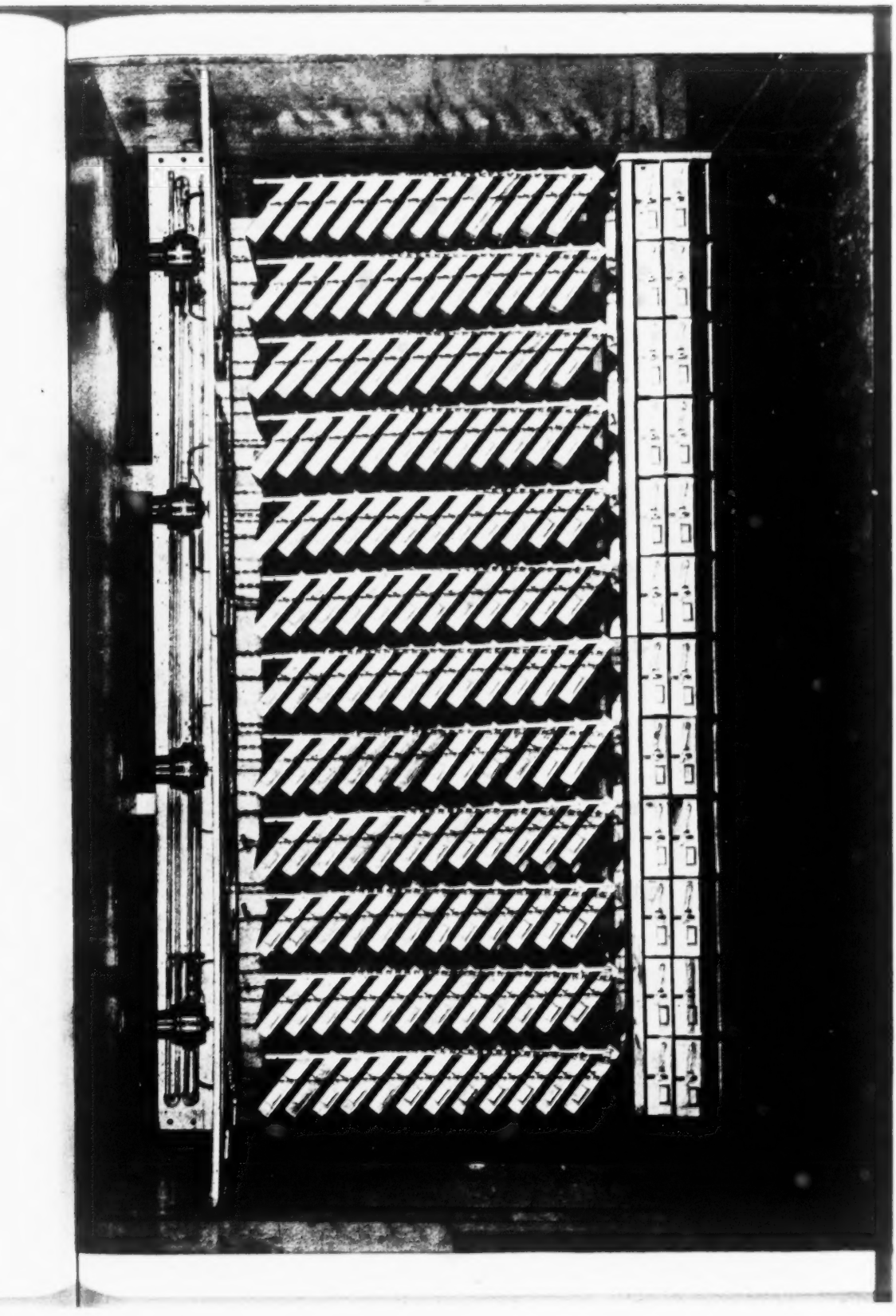

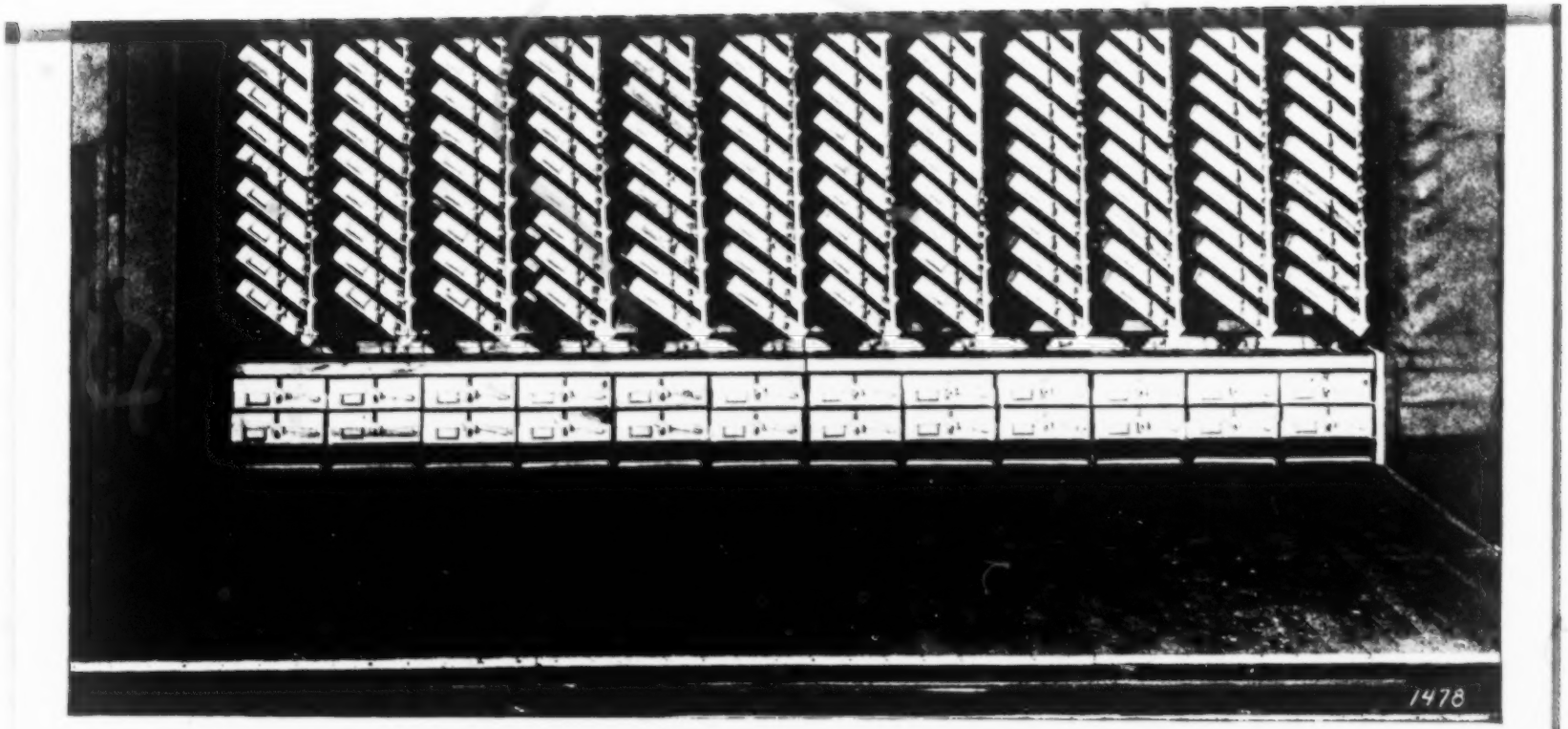

Plaintiff's Exhibit 6-C. Smith Incubator. Side elevation of egg trays.

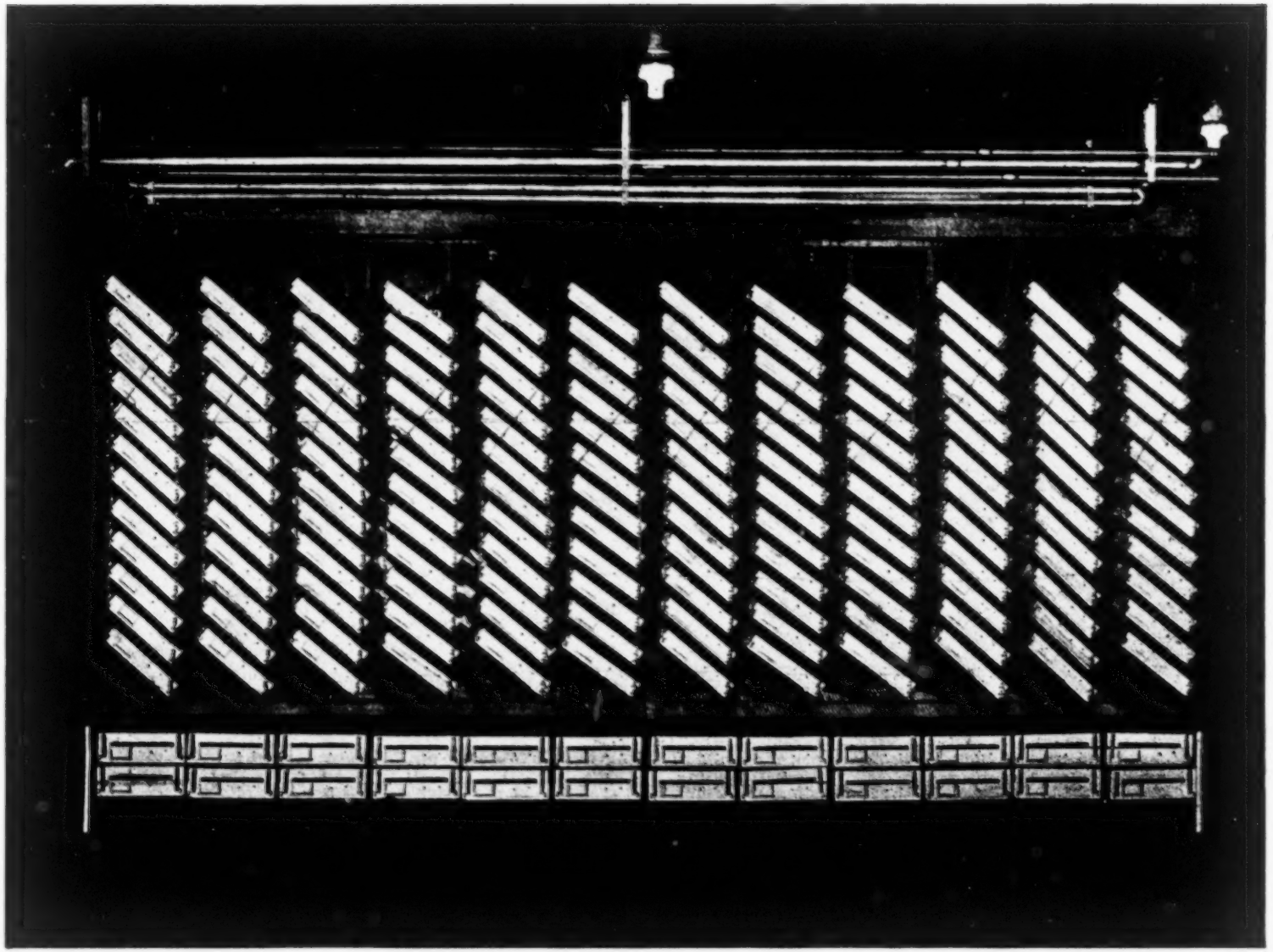

Plaintiff's Exhibit 10-C. Snow Incubator. Side elevation of egg trays.

SNOW-INCUBATOR

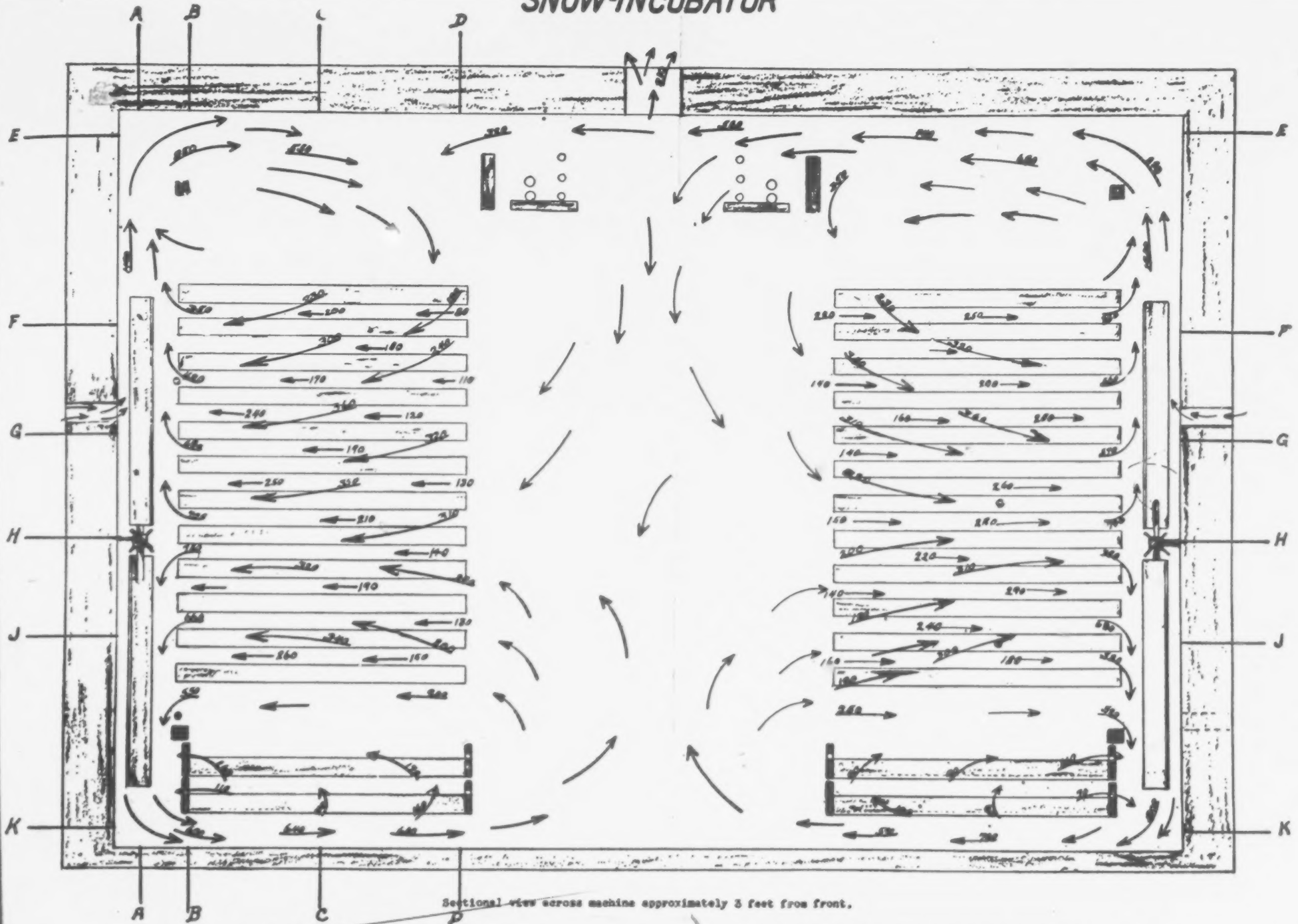

Sectional view across machine approximately 3 feet from front.

Arrows show general direction of air currents. Numbers give approximate speed of currents as recorded by anemometer.

Readings in lower two trays were taken with the anemometers in the trays.

Fans were rotating counter clockwise 208-210 R.P.M.

Short arrows between upper twelve trays show direction and approximate speed of air currents near center of trays. In these readings, the anemometer was placed in the trays in normal operating position.

Long arrows sweeping across sides of upper twelve trays show currents between tray columns.

incubating trays being shown in inclined position, with horizontal hatching trays below.

In starting the incubator in use (Vol. I, pp. 142-143) respondent sets one-seventh of the total incubator capacity at one time, by placing a tray of eggs at the top of each of the twenty-four columns and also one three spaces down, as indicated by "1st" on page 533 of Volume II. Then, three days later, namely on the fourth day, trays of eggs marked "4th" are inserted; then two more trays on the "7th" day, etc. When the tilting trays have been filled it will be observed that there are some fresh eggs in the incubator (those last put in) and some have been in for sixteen days and are almost ready to be hatched. In two days more the latter trays are moved to the hatching trays, shown at the bottom of the incubator, and trays of fresh eggs are inserted in their place.

So it is apparent that the respondent practices "staged incubation"; that is, the eggs in the various trays are in various stages of incubation.

At Vol. II, page 473 is another view (here reproduced facing page 13) of the interior of the respondent's incubator, showing the large fans H, one at the right and the other at the left. The arrows show the course of the currents of air produced by those fans.

As shown by tests and test diagrams in the Record, the movement of air in the Snow machine is in an orderly regular fashion of current form, consistent and unchangeable.

The testimony of Mr. Taggart, plaintiff's expert (Vol. I, pp. 102-104) was based on extensive and exhaustive anemometer tests which covered weeks of study. By the use of these devices, it is possible to locate and plot the currents, their direction and speed. The findings were reduced to chart form in Exhibits 12 and 13 (Vol. II, pp. 473-511), the first sheet of Exhibit 12 being the one reduced and bound herein. In the several drawings constituting Exhibit 13 (Vol. II, p. 495) the current leaving

the fans is colored blue, and the portion of the same current as it comes back to the fans is colored red. The uncolored areas represent the regions in which the air is turning back toward the fans. It will be observed that the major portion of the egg trays is located in the red area, that is, where the air is moving as a mass toward the fans in current form.

The respondent's machine uses two fans of large diameter on either side wall and these fans are constantly rotated at 200 revolutions per minute, or more (Vol. I, p. 100). These fans draw the air from the egg trays located in front of the fans and discharge it centrifugally up and down and sidewise along the wall back of the fans where the current meets the end walls, floor and ceiling and moves toward the center of the incubator at speeds well above the average speed of the air movement in the Smith machine. The great majority of the air reaches the central corridor where it turns back and passes in a steady current between the egg trays in its return path to the fans (Vol. I, p. 105). The speed of the air as it passes through the egg trays varies from 150 to 300 and 400 feet per minute, a much higher speed than that at which the air moves through the egg trays in the Smith machine. Where the inward and outward currents are adjacent, there is a region where, as might be expected, portions of the air in motion forward turn back and join the main body of inward moving air. At isolated points on the floor or on the ceiling the air current from one side of the machine crosses the corridor and enters the other side of the machine. At the region where two fans on one side of the machine meet, a current of air is projected forwardly through the egg trays and then turns back to join the main inwardly moving current. All of the air movements which vary from the main body of the air in motion are easily understood and explainable, and they are constant. They in no way detract from the general statement that *the body of air in the machine is*

moving in current form through the egg trays. In the corridor there is some confusion of currents, but this is immaterial for

> "through the egg trays themselves, around the egg trays and through the air spaces between the egg trays there are definite, definable currents" (Vol. I, pp. 104-105).

The conditions within the corridor are analogous to the conditions above the fans in the patent in suit where the currents of air from the opposite sides of the machine meet and mingle to be recirculated by the fans.

Within the region of the egg trays, the air in Smith moves up the spaces between the racks in a vertical direction. Within the region of the egg trays in respondent's machine, the air moves through the spaces between the racks in a horizontal direction. The claim in suit does not specify the *direction* of the current; it purposely omits reference to the direction of current flow, a limitation as to *vertical* movement being found in claim 3 not in suit. Claim 2, not at issue here, contains a limitation as to the generation of the current of air *in an adjacent chamber,* which is not in claim 1.

So respondent has not only staged incubation but, also, a definite current of air which will, necessarily, pick up heat from the eggs in advanced stages of incubation and deliver it to the fresher eggs.

And in the respondent's machine the air is definitely recirculated, that is, the current of air passes over and over again through its course in the chamber. There are small adjustable air inlets located in the back wall of the cabinet through which fresh air enters and is picked up by the fans and mixed with the main body of air in circulation. The foul air outlets are on the ceiling of the cabinet directly over the corridor. In the operation of the respondent's machine the amount of air which enters the circuit is the same as that which enters the

air circuit in the Smith machine, namely, one-half of 1% of the whole volume of air (Vol. I, pp. 68, 93). Therefore, in the respondent's machine, 99½% of the whole volume of air is moving in continuous cycles throughout the cabinet and in contact with all the eggs in the cabinet.

The Errors Assigned and to be Argued.

The errors assigned in the petition for writ of certiorari and to be argued here are:

1. The Circuit Court of Appeals for the Eighth Circuit *erred in restricting* claim 1 of the patent in suit to the precise arrangement of eggs described in the specification of the patent.*

2. The Court erred in holding that that claim is not infringed.

Summary of Argument.

Smith, the patentee of the patent in suit, has accomplished something of real merit as has been recognized by the concurring views of four Circuit Courts of Appeals holding that claim 1 here in issue is valid.

A very large business has been built up on the basis of his invention the essentials of which were to have the eggs in the incubator in a condition of "staged incubation" and to utilize the heat given off by the eggs in advanced stages of incubation by transferring that heat to the cooler eggs in the less advanced stages of in-

---

* *In this holding the Circuit Court of Appeals of the Eighth Circuit stands alone.* The Circuit Courts of Appeals of the Third, Sixth and Ninth Circuits have all concurred in the opposite view, *i. e.*, that the order and arrangement of eggs and the direction of the air current with respect thereto is not essential to the Smith invention, nor is it an element of the claim in issue here.

cubation by means of a forced draft or current of air throughout the incubator which is substantially closed, the forced current of air thus moving over the eggs throughout the incubator again and again and efficiently taking up heat from the hot eggs and delivering it to the colder eggs.

As substantially the same air repeatedly moves over all the eggs again and again, it is entirely immaterial in what order the eggs in different stages of incubation may be in the incubator. The currents of air persisting throughout the chamber transfer the heat from the older eggs to the fresher eggs no matter what the arrangement of the eggs may be. The result is precisely the same irrespective of the arrangement. Smith, the patentee of the patent in suit, preferred a certain arrangement of eggs as described in his specification, but the claim in issue is not limited to any particular arrangement and there is no reason why Smith's preferred arrangement should be read into the claim and every reason why the claim should be construed to give to the inventor the full benefit of the real contribution to the art that he has made.

Neither what was known or practiced before his time nor the history of his application while it was pending in the Patent Office require that the claim shall be given any meaning other than that which it has as it reads. Indeed, a consideration of what was known prior to Smith's time merely emphasizes what his real invention is as expressed in the claim, namely, a forced draft or circulation of air applied to eggs in staged incubation in a closed chamber.

That was his invention. That is the thing that has brought success. That is the thing that the defendant uses.

ARGUMENT.

POINT I.

The essentials of the Smith invention and what was accomplished.

That Smith has accomplished *something* of real merit is apparent from the concurring views of the Circuit Courts of Appeals of the Third, Sixth, Eighth and Ninth Circuits in the various decisions cited at the outset of this brief.

The Circuit Court of Appeals first to sustain Claim 1 in issue was the Sixth, in the *Wolf* case (296 Fed. 680). Then the Court of Appeals for the Third Circuit, in the *Cooley* case (17 F. (2d) 453) on a completely independent investigation, reached the same conclusion, as that Court did, also, in the *Hillpot* case (24 F. (2d) 341). Then, in the Eighth Circuit, the Circuit Court of Appeals, in the *Miller* case (41 F. (2d) 619) reached the same conclusion after having "independently examined the question of validity". And the Ninth Circuit Court of Appeals, in the *Waxham* case (70 F. (2d) 457) passed on the merits again, and sustained the claim.

So, starting with the established and repeatedly adjudicated merit of what Smith accomplished, let us see just what that thing was.

The new thought underlying the invention was to take advantage of and make use of the heat given off by the eggs in the advanced stages of incubation. To do this required that there should be present, in the incubator, some fresher and cooler eggs to which this heat could be transferred. Thus, for the first time, some benefit was derived from "staged incubation", namely, the having, in the incubator, eggs in various stages of incubation, some

cool due to being comparatively fresh and some warmer because nearer their hatching stage.

To pick up the excess heat given off from the eggs in the more advanced stages of incubation and transfer it to those in less advanced stages and requiring heat to be imparted to them, Smith went entirely counter to prior established practice in producing a continuous current of air passing over the eggs. That current performed two functions, *first,* it abstracted heat from the advanced eggs which tended to become overheated and gave that heat to the eggs which required heat; and, *second,* utilized the heat absorbing properties of the cool eggs to reduce the temperature of the older, hotter eggs.

In some of the earlier litigation on this patent, the Courts expressed the thought that picking up and transfer of heat could be effected only if the air, *as it left the fan,* first met the eggs in advanced stages of incubation (and therefore hot), and then the fresher, cooler eggs. This, however, would be so only if the air after picking up the heat from the advanced eggs went to the less advanced eggs and *then passed out of the incubator.* The early thoughts on this matter overlooked the fact that, in the Smith arrangement, substantially all of the air meets the eggs over and over again, in cycles; it does not pass out of the incubator but is recirculated. Thus, even if the air, as it leaves the fan, meets first the cool eggs and then the hot eggs, it picks up heat from the hot eggs and, as it comes around again, delivers that heat to the cooler eggs. After the cyclic action is once established, one cannot say whether or not the air meets *any* eggs first; it all depends upon the point in the circle from which one is observing.

As the Third Circuit Court of Appeals said, in the *Hill-pot* case (24 F. (2d) 341, 344):

> **"But when, as in Smith, the air moves in cycles through corridor and tiers it makes no difference after the first cycle which way it moves through the egg**

> **trays, whether from bottom to top or from top to bottom, or whether it first strikes warm eggs or first strikes cool eggs, for in every cycle after the first the current when passing warm eggs will gather up their heat units and carry them to the cool eggs precisely as claimed and will in the same way produce that uniformity of temperature which is the thing sought by the art and achieved by the invention."**

The Sixth Circuit Court of Appeals after first missing the point in the *Petersime* case (19 F. (2d) 721), corrected itself in the later *Blum* case when it said in referring to that earlier case (27 F. (2d) 333):

> **"In that opinion some acceptance was given to the theory that there is no infringement, unless the circulating air strikes first those eggs which are in the last stages of incubation and are generating the greatest heat. In considering a construction where the main current of air is brought in from outside, and in thinking of only the first circuit which this air makes, that thought seems applicable.**
>
> **"Counsel now point out, with much force, that in a case where the air does not come in from the outside in large volume, and that in any case during the circuits after the first one, no one point in the circuit gets the air ahead of any other point, in an absolute way. Which point gets it first depends upon where we consider the circuit to begin. We think we need not consider the effect of this defect in the reasoning —if it is a defect—of our former opinion."**

Nor, having in mind the cyclic movement of the air, can it make any difference whether the trays of eggs are arranged progressively (so that the fresher eggs are toward, say, the top of the stack of trays and those in the more advanced stages are toward the bottom, the freshest being in the top tray and the oldest in the bottom

tray) or the trays are mixed up so that, for instance, a tray of eggs in the more advanced stages is between two trays of fresh eggs, or a tray of fresh eggs is between two trays in more advanced stages. In either case the air will abstract heat from the advanced eggs and that heat will necessarily pass to the fresher eggs no matter what may be the direction of flow of the repeated cycles of movement of the air. This was the view of the Ninth Circuit Court of Appeals in the *Waxham* case, 70 F. (2d) 457, 460:

> **"The appellant seeks to avoid the claim of infringement by reason of the fact that the eggs in his machine are not placed in a single column with the fresh eggs at the top and eggs which are hatching at the bottom, but are distributed through the chamber without any endeavor to place them in this exact relationship. This difference is clearly immaterial where the air in a chamber is kept at a constant and uniform temperature and rapidly circulated. The result of currents of air moving with high velocity would be to transfer heat from the older eggs to the fresher and colder eggs in either event. The important thing is the high velocity of the air current, avoiding stagnation in the immediate vicinity of the eggs in later stages of incubation."**

In the incubator illustrated in the Smith patent the trays, after initially being placed in the racks, may be taken out and moved into any other position. Smith considered that it would be preferable to move the eggs progressively, but this requires that all of the trays in the racks be taken out and shifted every three days. A lazy man would soon find out that this was not necessary, and that, if he left the trays during the whole eighteen day period in the positions in which they were initially placed, the results would be just the same. And this is exactly what happened. Operators found that it was not necessary

to carry out the procedure of the specification to the last detail of egg tray shifting, but that, if they let the eggs repose where they were first placed, no difference was discernible in the result.

This proposition was thoroughly understood by the District Court in the examination of petitioner's witness, Mr. Taggart (Vol. I, p. 70):

> "Q. You said it does not make any difference about the direction of the air. Does it make any difference about the order of the eggs?
>
> A. No, sir.
>
> The Court: Well, at the same time, if he put those in various positions, he means to say that the changing of those positions of the eggs would not make any difference, and it would keep the air uniform and equal.
>
> The Witness: Exactly."

It has also been understood by the practical hatcheryman for years that he did not have to shift the eggs to get the desired results, and the Buckeye incubators made under the patent do not require shifting of the eggs. This is described at page 79 of Vol. I:

> Q. Do you know whether or not in the operation of the Buckeye machine they shift the eggs in the columns?
>
> Mr. Williamson: That is objected to as immaterial.
>
> A. It has been customary most of the time, although many operators do not do it. They put the eggs in a given position and leave them there until the eighteenth day, when they take them out and put them in the hatching rack. In fact, the Buckeye has sold some machines in which they recommend that to be the method to follow."

In operating a Smith incubator, were the eggs not shifted during the first eighteen days but allowed to

remain in their original positions, they would become scattered as to their ages as one set of trays is removed each third day to be placed in the hatching racks and a new set put in its place. There is no particular virtue in any specific arrangement. The licensee, the Buckeye Company, and various infringers have adopted all manners of egg settings, the permutations being almost unlimited, but in every case the results are the same, the current of air passing over the eggs equalizing the temperature throughout the mass whatever be the order of arrangement.

It follows as a necessary corollary of the point just discussed that shifting of the eggs during the first eighteen days is not necessary either. By shifting the eggs Smith retains the same order as to age. If order is immaterial, as it must be considered to be, the maintenance of that order is immaterial also. This was simply a refinement adopted by Smith but not essential to carry out the process.

There is no valid reason why the Smith invention should be so limited that every user could avoid it by merely neglecting to shift the egg trays every three days. The Eighth Circuit said that it could not see how the purposes of the Smith patent could be carried out without that step, but every incubator operator in the country knows that the shifting of the eggs is not essential.

Respondent has adopted a specific arrangement of his eggs by which they are "sandwiched" in the stacks, that is to say, trays of a given age are spaced apart; but there is no particular virtue in this. He knows very well, and every incubator operator knows, that any arrangement will work. In the *Waxham* suit a still different arrangement was adopted and that worked. Other infringers have adopted still other settings, and the process still works. So long as the air moves over the eggs with sufficient definiteness and velocity to conduct the heat away from the hot eggs and carry it to the cool eggs the

desired result will be secured. As was said by the Circuit Court of Appeals of the Ninth Circuit, 70 F. (2d) 457, 460:

> "The result of currents of air moving with high velocity would be to transfer heat from the older eggs to the fresher and colder eggs in either event."

A further answer to the whole question is found in the operations of the various defendants and the results secured. Were order of egg arrangement or maintenance of that order by shifting essential, none of the defendants would secure the equalization of temperature throughout the eggs. But they all do. Respondent "sandwiched" the eggs, and did not shift the eggs until the hatching day approached, but got the same equalization of temperature that Smith got, by blowing the air over the eggs.

POINT II.

The claim in issue requires no particular order or arrangement of eggs.

Claim 1 of the patent has been quoted in full above (*supra*, p. 12). Nothing appears in the claim that requires that the eggs be placed in any particular or definite order, and certainly nothing that requires that the eggs be placed in the specific manner set forth in the specification; nor is there anything in the claim that requires the eggs to be shifted progressively to maintain that order. Had the patentee intended to limit his patent either to the ordered progression of eggs from top to bottom of the column in the order of their ages or advancement in incubation, or had the patentee intended to have included as an essential step the shifting of the eggs downward, it would have been a comparatively easy matter to have so defined and limited the claim but no such limitation appears. The eggs must be set at "differ-

ent levels," that is to say, in order to secure the immense capacity which Smith secured, the egg trays are stacked one above the other. And it is also necessary to set the eggs at intervals of a few days so that "staged incubation" will be present in order to have the heat units "carried from the eggs in the more advanced stage of incubation to those in a less advanced stage."

The Circuit Court of Appeals of the Eighth Circuit, whose decision is here under review, expressly and correctly held that the claim in suit did not require the exact order of egg arrangement or the shifting of the eggs, for it said (70 F. (2) 564, 567):

> "The statement of the claim is that the eggs are arranged 'at different levels.' This is broad enough to cover any arrangement at more than one level."

The Court of Appeals of the Third Circuit in discussing the egg arrangement described in the specification of the patent in suit and the scope of the claims said (24 F. (2) 341, 343):

> "Undoubtedly that is the preferred method described and, certainly, that is the working of the apparatus of claim 4, not of the apparatus of claim 5. *But it is not the working of the methods defined by claims 1 and 2 for they are not so limited in terms.*"

Nor does the claim in suit require that curtains be employed at the sides of the central corridor of the Smith machine, for no such apparatus limitations appear in the claim.

Nor does the claim in suit require that the fans be located at any particular point in the cabinet, or that the current of air shall move through the eggs in any particular direction or plane. All that the claim requires is "applying a current of heated air" to eggs arranged at different levels, so that the equalization of temperature will take place. This equalization of temperature does not take place by picking up a heat unit from any one

egg or one tray of eggs and carrying these specific heat units to another specific tray of eggs, but the temperature is equalized by absorption of heat units by cold eggs and the surrender of heat units by hot eggs to and from the air stream which is passing continuously over and around all of the eggs.

The Court of Appeals of the Eighth Circuit specifically stated that the claim was by its terms of sufficient breadth to cover such an arrangement as is used by the respondent here for it said (70 F. (2) 564, 567):

> "It is with that claim" (claim 1) "only we are concerned for if it is to be given the full scope of its expression it covers the accused device."

But the Circuit Court of Appeals then proceeded to read into the claim details of egg arrangement described in the specification. Such arrangement may be preferred by some, but is entirely unnecessary for giving the results by the Smith method (pp. 18-24, *supra*).

POINT III.

The claim in suit is not limited by the file wrapper proceedings to the specific arrangement of eggs or to any of the other features upon which the respondent relies to escape infringement.

The Circuit Court of Appeals for the Eighth Circuit, whose decision is here under review, did not, in imposing a limitation on the claim, rely upon any estoppel growing out of the proceedings in the Patent Office, commonly known as "file wrapper" estoppel. But that has been urged by respondent, so we shall comment on it here.

It cannot be said that the arrangement of eggs or any of the other features stressed by the respondent as arguments for non-infringement were added to the claims

as a condition of allowance by the Patent Office, for none of those things appear in the claims.

The principle of file wrapper estoppel is well known and well understood. It is set forth in the decision of this Court in *I. T. S. Co.* v. *Essex Co.*, 272 U. S. 429. As the Court said (p. 443):

> "he" (the patentee) "cannot after the issue of the patent broaden his claim by dropping the element which he was compelled to include in order to secure his patent."

As none of the features upon which the respondent relies for non-infringement is included in the claim, we cannot be accused of seeking to read out of the claim any of the features relied on.

Nor was there any intention on the part of Smith or his attorney that any one of these elements be included, nor any argument made for allowance based upon such features. The entire argument tendered with the claims at the time of their allowance was as follows and we quote it to show that the distinction which we have stated as between natural or induced drafts (which leave stagnant places at some eggs) and the forced current to give air movement *throughout* the incubator (which respondent uses) was recognized and stated when the claim in issue was allowed (Vol. II, pp. 927, 931):

> "*Natural* drafts seek and follow the same paths and when employed in incubators leave untouched areas of the egg chamber. This causes an uneven distribution of the heat and a variation of temperature that makes it impossible to successfully hatch eggs placed at different levels; and this is equally true of induced drafts caused by heating outlet pipes of the egg chamber. Convincing proof of this is found in the affidavit of George Cugley filed herewith.
>
> **"Applicant by the introduction of a current produced by mechanical means distributes and diffuses the heat throughout the egg chamber and gives an even temperature in all parts of the chamber whereby**

it is possible to place the eggs at different levels; but this is not all; it is essential that a sufficient amount of moisture be retained for successful incubation and to that end the outlets for escape of foul air are restricted. The vitalizing effect of agitating the air within the chamber by a power driven current makes possible the use of restricted outlets and the moisture is thereby conserved within the chamber.

"The *induced* drafts of the new references are for the purpose of freeing the incubator of foul air. Such drafts not only follow certain paths leaving areas of the chamber untouched as heretofore pointed out; but they entirely exhaust the moisture from the egg chamber and thereby destroy the hatch. There is a vast difference—just the difference that distinguishes success from failure—between the old art of natural and induced drafts and the power driven current of applicant with its restricted outlets giving a uniform temperature, vitalizing the air and conserving the moisture in the air within the egg chamber.

"While it is true the egg conveyor of Winkler is arranged with one section above another he depends entirely on having a separate heater for each section adapted to the stage of incubation of the eggs in its section. Furthermore, although his patent was issued as far back as 1883 his construction is not known on the market today showing it could not have been a success. It lacks the essential features that have made the device of applicant a successs.

"The so-called Mammoth Incubators of recent years are all made with the egg trays in the same horizontal plane. In other words, the old units are simply multiplied each having a single tray, the combination making an incubator of great length, whereas by the method of applicant the egg trays can be placed in column allowing the incubator to be built in compact form, so that the material employed, cost of construction and space required is vastly less and the cost of fuel and attendants to operate is proportionately reduced.

"Applicant's incubator is clearly distinguished in that a power driven current is employed to establish a uniform temperature throughout the area of the egg

chamber whereby the eggs can be placed at different levels and the restricted outlets conserve the moisture in the chamber, this restriction and conservation being made possible by the vitalizing effect of the power driven current.

"Applicant has discovered a new method of successfully hatching eggs continously in large numbers and should be protected in it. An allowance is respectfully urged."

The above argument can be carefully and painstakingly searched but no reference whatever appears therein to a specific order of eggs or to any order of eggs; no reference to shifting the eggs; no reference to the location, size or speed of the fans, or to the direction of the air current; and no reference to the curtains or partitions.

There, therefore, could not have been in the mind of the applicant, or in the mind of the Examiner who allowed the claim, any of these considerations. The argument, on the contrary, was directed solely to the different effects of "a current produced by mechanical means" over drafts caused by variations in temperature. "The vitalizing effect of agitating the air within the chamber by a power driven current" was the feature emphasized by the attorney.

It frequently happens that the Examiner takes a hostile attitude toward an invention, as was the case here, but is finally convinced of the presence of invention, and allows adequate claims to protect it. So, in the present case, some of the claims appearing during the prosecution of the application were narrower than claim 1 of the patent. This is a matter of no consequence.

A case directly in point is *Westinghouse Electric & Mfg. Co.* v. *Condit Electrical Mfg. Co.*, 194 F. 427-430 (C. C. A. 2d):

> "Sometimes such proceedings are of importance, especially where a matter of estoppel is involved. Thus a patentee who, in order to avoid a rejection of his application, inserts limitations in his claims is estopped from contending that the patent as issued

should be construed as if such limitations had not been made. But, as a general rule, the interpretation to be placed upon the claims and specification of a patent is to be determined from the language of the grant, and the proceedings in the Patent Office are quite immaterial. Such is the situation in the present case. *Original claims were rejected in the Patent Office. Thereupon the applicants, instead of limiting their claims, substituted broader ones which were accepted.* Presumably the examiner changed his mind. But whatever be the explanation of his position, nothing whatever is shown to work an estoppel against the patentees. *Instead of surrendering something which they now claim to obtain that which was allowed, they claimed something more and got it.*"

After the prosecution of the Smith patent got under way, the attorney fought consistently and unremittingly for the allowance of claims on the forced-draft-staged-incubation invention. Not once did he amend the claims to set free that invention, nor did he in a single argument for the allowance of the method claims, urge any other considerations than the advantages and merits of that conception.

Also, some claims appeared in the application at various times, which were broader than those allowed. This is again a matter of no consequence, for if the claims, as allowed, are of sufficient breadth to cover the respondent's mode of operation, infringement must follow.

This principle of law was stated in *Baltzley et al.* v. *Spengler Loomis Mfg. Co., et al.*, 262 Fed. 423-426 (C. C. A. 2d):

"Having from this viewpoint examined the file wrapper, we are of opinion that the patentee's disclosure stated fully and at first facts sufficient upon which to ground the claims in suit, and such claims or their equivalents he never receded from. *Many claims, first propounded, were obviously too broad; but Baltzley never 'accepted limitations imposed by the rejection of broader claims' and affecting the*

claims in suit. The residuum is ample for the purposes of this case. See *Goodwin, etc.* v. *Eastman, etc. Co.* (D. C.), 207 Fed. 357, affirmed 213 Fed. 231, 129 C. C. A. 575."

A leading case is *National Hollow B. B. Co.* v. *Interchangeable B. B. Co.* (106 Fed. 693, 714), where the Circuit Court of Appeals of the Eighth Circuit said:

> "It is true that if a patentee acquiesces in the rejection of his claim on references cited in the patent office, and accepts a patent on an amended claim, he is thereby estopped from maintaining that the amended claim covers the combinations shown in the references, and from claiming that it has the breadth of the claim that was rejected. *Roemer* v. *Peddie,* 132 U. S. 313, 317, 10 Sup. Ct. 98, 33 L. Ed. 382; *Morgan Envelope Co.* v. *Albany Perforated Wrapping Paper Co.,* 152 U. S. 425, 429, 14 Sup. Ct. 627, 38 L. Ed. 500; *Brill* v. *Car Co.,* 90 Fed. 666, 668, 33 C. C. A. 213, 215, 62 U. S. App. 276, 282; *Railroad Co.* v. *Kearney,* 158 U. S. 461, 469, 15 Sup. Ct. 871, 39 L. Ed. 1055; *Knapp* v. *Morss,* 150 U. S. 221, 14 Sup. Ct. 81, 37 L. Ed. 1059; *Crawford* v. *Heysinger,* 123 U. S. 589, 8 Sup. Ct. 399, 31 L. Ed. 269. But this is the limit of the estoppel. *One who acquiesces in the rejection of his claim because it is said to be anticipated by other patents or references is not thereby estopped from claiming and securing by an amended claim every known and useful improvement which he has invented that is not disclosed by those references."*

It is also well known, as stated by this Court in the case of *Smith* v. *Magic City Club* (282 U. S. 784, 790):

> "The patentee is thereafter estopped to claim the benefit of his rejected claim or such a construction of his amended claim as would be equivalent thereto."

This rule does not apply in the instant case. The respondent in the Court below selected a number of the broader claims as examples to bring this case within the

quotation above, but it will be found upon examination of each and every one of these claims, and comparison of those claims with claim 1, that the rejected claims did not include the limitation to—

> "a closed chamber having restricted openings of sufficient capacity for the escape of foul air without undue loss of moisture."

It was the inclusion of *this* element in the claims and the concurrent amendment to the specification (Vol. II, p. 925) which secured their allowance. Prior to this time there had been no limitation of the process to the step of conserving the moisture by subjecting the eggs to the current of air in the substantially closed chamber, and this feature, though shown, had not been emphasized in the specification. In this amendment to the specification the sentences which begin line 43 of page 2 of the patent were added, reading:

> "The outlets 28 for the release of foul air are made of such restricted capacity as to prevent the undue escape of moisture. It is possible to limit the openings and so conserve the moisture by reason of the vitalizing effect of the power driven current upon the body of air within the chamber."

This was the first time in the prosecution of the application that the essential step of moisture conservation was emphasized; it was accompanied by a supplemental oath (Vol. II, p. 933) and the allowance of the claim followed immediately thereafter.

But the respondent can take no comfort from this limitation for respondent's incubator has small, regulatable openings for the intake of limited amounts of fresh air and small openings for the escape of the foul air "without undue loss of moisture."

It will also be noted that this addition to the claims brings into the patent the thing upon which is based the recirculation of the air, which makes the order of egg arrangement immaterial, *i. e.*, the fact that the chamber

is substantially closed gives rise to the recirculation of the air in the closed cycle characteristic of the Smith invention.

The file wrapper is not hard to follow. Nevertheless some of the Courts below have made statements concerning it which are difficult to understand and impossible to substantiate.

The opinion of the District Court in the *Hillpot* case which has been cited at great length by the respondent here in the Court below, and by other defendants, stated (22 F. (2) 855-857):

> "Step by step through the Patent Office did Smith limit his claims to the passing of the air currents from the eggs in the more advanced stages of incubation to those in less advanced stages of incubation. Day after day he was forced to limit his early broad claims for circulating the air through the eggs arranged in columns to forcing air in a given direction."

This statement was unjustified. At not a single point in the Smith file wrapper did he limit himself to "passing of the air currents from the eggs in the more advanced stages of incubation to those in the less." Nor did Smith at any stage of the proceedings limit his claim to "forcing air in a given direction." The "units of heat" are to be carried from the hot eggs to the cooler eggs and, having in mind the Smith repeated, cyclic flow of air in the closed chamber, it is entirely immaterial in what direction the air current flows to accomplish this result (see pp. 18-24, *supra*).

Judge Hough of the Southern District of Ohio in *Boling* v. *Buckeye* (33 F. (2) 347, 351) said "Smith must be pinned down and limited to his own theory as required by the Patent Office and the decision of our Court of Appeals." There is not a single thing in the proceedings in the Patent Office which limits Smith beyond the clear, unambiguous language of Claim 1 as allowed, and *certainly Judge Hough misunderstood and misapplied the rulings of his own Circuit Court of Appeals, which* REVERSED *him* (46 F.

(2) 965) *and sent the Boling cases against users on to be tried resulting in a holding of infringement by Judge Cavanah in the Jensma case* (1 Fed. Supp. 999).

The Circuit Court of Appeals for the Third Circuit in the *Hillpot* case said that the file wrapper points out the fact that curtains make "a tight closure between the corridor and the compartments." *This phrase occurs in the Examiner's letter of March 24, 1917, in the discussion of then claim 17 which was an apparatus claim* (Vol. II, p. 889). It is indeed a new and novel theory that the comments of the Examiner on a detailed apparatus claim can limit the applicant in his broader process claims.

The Court said that the file wrapper speaks of "air passageways". As this expression occurs only in more limited apparatus claims which were cancelled during the prosecution of the application and does not appear in the claim in issue or the argument submitted therewith, it can have no limiting effect upon the claim as allowed.

The Court also referred to the presence of the phrase "vertically directed current", but this limitation, as noted above, appears in claim 3, not in suit, and the claim in issue is therefore to be considered as intentionally omitting this limitation.

As was said in *Symington* v. *National Castings Company,* 250 U. S. 384, 385:

> "There is nothing in Byers' claims which were sustained indicating that the pocket is to be integral, while there is a distinct call for such a pocket in claim 9. The difference in terms points persuasively to a difference in purpose * * *"

See also

Skelton v. Baldwin, 58 F. (2d) 221, 227 (C. C. A. 4).

Los Angeles Art Organ Co. v. *Aeolian Co.,* 143 Fed. 880-885 (C. C. A. 9).

Wm. B. Scaife & Sons Co. v. *Falls City Woolen Mills,* 209 F. 210-215 (C. C. A. 6).

The ten references to "forced circulation of heated air" are of no importance here, for the respondent admittedly employs "forced circulation of heated air". The same is true of the phrase "currents" to which the Court of the Third Circuit referred, for the respondent employs "currents" of air.

The references to "columns of heated air" appear in connection with the specific embodiment of the invention described in the specification and in original claims 3 and 4 subsequently cancelled (Vol. II, p. 861). As this limitation is not in the claim in issue nor in the argument upon which it was allowed, it cannot be said to affect its scope in any way.

The Third Circuit further said that Smith yielded "to the demand of the Patent Office that the 'circulation of air should be included and defined' ". This particular phrase appeared in the action of March 24, 1917 (Vol. II, p. 891) and had reference to a detailed apparatus claim. It, therefore, has no bearing upon the broader process claims which were allowed, and this casual phrase of the Examiner has no bearing upon the scope of the claim as allowed, as it was never repeated in the Office actions which intervened before allowance.

Finally, the Court said (p. 344):

> "Smith acquiesced in repeated rejections of his claims, proposed others and finally accepted those allowed, in each of which is embodied the conception of air movement by currents in defined channels."

This statement is wholly unwarranted for *claim 1 of the patent as allowed, contains no reference whatever to "currents in defined channels"*, nor does the supporting argument contain a reference to this feature.

That Court also erred in stating (p. 344) that "nowhere in the file wrapper, specification or claims of the patent do we find any reference to air agitation." In the very argument which accompanied the allowed claims the attorney said "The vitalizing effect of *agitating* the air within the

chamber by a power driven current makes possible the use of restricted outlets," etc. (Vol. II, p. 929). The claims were, it is true, limited to a flow of a *current* of air—which this respondent uses—as distinguished from *mere* agitation which would leave local stagnant spots where there would be no adequate transfer of heat.

The prosecution of the apparatus claims has no bearing whatsoever on the method claim which is under discussion here. We rely upon the fundamental rule stated by this Court in *Tilghman* v. *Proctor,* 102 U. S. 707, 721, or *Carnegie* v. *Cambria,* 185 U. S. 403, that a method or process is independent of apparatus for carrying it out. Whatever limitations Smith may have added to his *apparatus* claims, cannot affect the different invention of his *method,* nor can the narrower limitations of method claims 2 and 3 affect the scope of claim 1 in issue.

The Courts below have simply floundered about the file wrapper. In truth it is nothing more than the usual record which is found in dealing with an Examiner who is only brought to see the light after repeated actions by the attorney. Statements that the file wrapper imposed any limitations of which this respondent can take advantage are without foundation, and, as we have said, the decision under review did not find that any limitations were so imposed.

POINT IV.

The respondent infringes.

(1) Respondent's method is the same as the Smith method.

All of the steps of the Smith method are found in the operation of respondent's machine. There is no difficulty in locating the closed chamber, the restricted openings for the escape of foul air and openings for the introduction of a restricted amount of fresh air, and we have the eggs arranged in different levels in different stages of incubation. There is no dispute on those points.

As shown above (pp. 13-16) there is also in this machine forced circulation of air of a velocity sufficient to cause the air to move *throughout* the chamber, leaving no localized stagnant areas. The air from the corridor moves in current form over the eggs to the fans on the side walls. The air is then propelled along the walls of the cabinet until it reaches the corridor and is drawn again over the eggs to the fans in an endless circuit. The speed of the current in the respondent's machine is somewhat higher than the speed of the current in the Smith machine. This is not disputed by the respondent.

The eggs in the respondent's machine are in the several stages of incubation, and the current of air, as it passes over these eggs, picks up heat from hot eggs and distributes that heat to the cold eggs. The air moves in continuous cycles impelled by the fans in respondent's machine, the moisture is conserved, the air made life-giving, and the temperature throughout the chamber is maintained substantially uniform.

The respondent therefore employs every element of the claim in suit. He also secures the same result in substantially the same manner, for he hatches a plurality of eggs by passing a current of heated air over eggs in staged incubation, in repeated cycles, just as Smith does, and

thereby the temperature of all of the eggs is equalized, or, in other words, the units of heat from the hot eggs are transferred to the cool eggs.

Mr. Taggart, a witness for the petitioner, testified (Vol. I, p. 110) that the fans in the respondent's machine are of such capacity and create such a volume of air that they generate the direct and definable current without the use of means for guiding or directing it:

> "The air is being forced fast enough and in sufficient volume so that it will penetrate all parts of the machine, and there is no necessity for directing or guiding it with curtains or other means; in other words, it flows fast enough to definitely establish its own path."

Nor can the respondent dispute that statement for his own expert said (Vol. I, p. 366):

> "Q. And, in the Snow machine, we have a plurality of eggs that are stacked in tiers, one above the other, do we not?
>
> A. Yes, sir.
>
> Q. And we also have eggs which are in various stages of incubation, do we not?
>
> A. Yes, sir.
>
> Q. *And we have a current of air in that Snow machine, do we not?*
>
> A. *Yes, we have a current of air through there.*"

In fact, it would be an impossibility to obtain anything other than an orderly movement of air in definite paths in a machine containing a substantially enclosed body of air propelled by fans of the size and capacity used by respondent and running at constant speeds and in fixed direction. The air would necessarily set up a continuous and regular cycle of movement, which would develop into a regular defined and definable current throughout the chamber.

This statement does not exclude, of course, that at certain points in the interior of the chamber, the air will

be turbulent while moving as a whole. It is impossible in any incubator in which the air is impelled with sufficient velocity to accomplish the results which Smith accomplished, to avoid some eddy currents, ebullition, boiling or whipping of the air as it passes over egg trays and about the interior of the cabinet. But the main body of the air as it passes over the eggs is in steady current form moving continuously and uninterruptedly in a constant direction, and it effects the desired heat transfer adequately cooling the hot eggs and heating the colder eggs.

Judge Molyneaux in the District Court in the present case, saw respondent's machine in operation and made definite fact findings that that machine had current movement of air for he found (Vol. I, p. 23):

> "23. The defendant, * * * employs a process in which the current movement of the air in defined paths is secured by mechanical means such as fans."

After all, the purpose of the fans in the Smith patent, as stated in the claim, is to propel the air over the eggs with "sufficient velocity to circulate, diffuse and maintain the air throughout the chamber at substantially the same temperature," and, as said in the specification p. 2, lines 73 to 78:

> "It is obvious that the fans can be so arranged and can be operated at such speed as to cause the hot air to circulate fast enough to keep the temperature throughout the chamber between the limits of 100° and 105°."

Snow stated that the air within his incubator was circulated so that the same temperature was maintained through the whole cabinet (Vol. I, p. 163):

> "Q. Have you found in your experience with your own machine that you have any cold or hot spots, compared with the condition of other parts of the incubator?

A. We do not have no hot or cold spots in my incubator; that is, not hot or cold spots that would cause any damage whatsoever; that would amount to a trifle.

Q. Is that due to the more thorough circulation of your air?

A. Yes sir, and the air not being driven such a long distance."

(2) The claim is the criterion of infringement—not the specification.

The scope of the Smith patent is to be determined by the *claim* in suit and not by the detailed description in the specification.

> "The invention, of course, must be described and the mode of putting it to practical use, *but the claims measure the invention.*" (Paper Bag Patent Case, 210 U. S. 405, 419.)

If, therefore, the elements of the claim in suit are to be found in the respondent's operations, and the Circuit Court of Appeals of the Eighth Circuit expressly found that they were (p. 26, *supra*), then a finding of infringement should have followed.

It was the failure of the Eighth Circuit to understand or appreciate the effect of the recycling body of air which led it to the erroneous conclusions on the scope of the Smith patent. The opinion of that Court frankly admitted that it was unable to see how the heat transfer could be effected unless the air, as it left the fan, struck the hot eggs first and then proceeded to the cold eggs. The Court said (70 F. (2) 564, 568) "it is difficult to see how the desired results can be secured except by a current of air passing first through the trays containing the most advanced eggs." The fact that no reference was made by the Court to the recycling movement of the air (see pp. 18-24, *supra*), shows that it did not understand it, for, if it had, the difficulty expressed would have been cleared up.

The only explanation which can be given for failure to apply the rule that the claim is the measure of the invention, is that the Eighth Circuit could not understand how the results specified could be secured in any other way than the specific manner disclosed in the patent. From this fundamental error, the other errors flowed.

Had the Court understood the cycle movement of air in the Smith process and appreciated its effect upon egg arrangement, it would not have failed to apply the rule that the inventor is required by Section 4888 of the Revised Statutes only to explain his invention "and the best mode in which he has contemplated applying that principle." As pointed out by this Court in the *Paper Bag Patent Case,* 210 U. S. 405, 418, the inventor is required to point out "the best mode, but he is not confined to that. If this were not so most patents would be of little worth." The Statute then requires that the inventor shall particularly point out and distinctly claim the "part, improvement or combination which he claims as his invention or discovery." The Statute makes it quite clear that the specification or descriptive part of the patent is for the purpose of enabling those skilled in the art to understand the invention, but when the scope of the patent is to be determined it is the claims which control. This Court went on in the cited case to say, as we have quoted above, that "the invention, of course, must be described and the mode of putting it to practical use, *but the claims measure the invention.*"

The remarks of this Court in *Winans* v. *Denmead,* 15 How. 330-343, are particularly apt:

> **"Patentees sometimes add to their claims an express declaration, to the effect that the claim extends to the thing patented, however its form or proportions may be varied. But this is unnecessary. The law so interprets the claim without the addition of these words. The exclusive right to the thing patented**

is not secured, if the public are at liberty to make substantial copies of it, varying its form or proportions. And, therefore, the patentee, having described his invention, and shown its principles, and claimed it in that form which most perfectly embodies it, is, in contemplation of law, deemed to claim every form in which his invention may be copied, unless he manifests an intention to disclaim some of those forms."

In the Smith patent there was no intention to disclaim other forms. Smith merely illustrated what he considered as the most perfect embodiment of his invention.

See also:

Robinson on Patents, #485, Vol. II, page 75:

> "The applicant is not required to describe all possible forms in which this principle may be reduced to practise, or even all such forms as he may have himself adopted. These belong to the skill of the mechanic, not the inventor; and having one embodiment before them, the public are presumed to be able to construct such others as they may desire."

So, after all, to measure the scope of the Smith invention we must turn to the claim in suit, and, as pointed out in the earlier portion of the brief, there is no limitation to any order of egg arrangement or to the movement or shifting of the eggs during the process.

The Circuit Court of Appeals of the 8th Circuit in deciding the present case overlooked its own holding in *McDonough* v. *Johnson-Wentworth Co.,* 30 F. (2) 375, 384:

> *"And the particular forms of devices described in the specifications are to be considered as merely forms of devices preferred by the inventor. Continental Paper Bag Co.* v. *Eastern Paper Bag Co., supra; National Hollow B. B. Co.* v. *Interchangeable B. B. Co.,* 106 F. 693, 715 (C. C. A. 8); *Owens Co.* v. *Twin City Separator* Co., 168 F. 259 (C. C. A. 8). *The claims of a patent, and not necessarily the description, measure the invention. Continental Paper Bag Co.* v. *Eastern Paper Bag Co., supra."*

The instant case is clearly distinguished from the case of *Snow* v. *Lake Shore Railway Co.* In that case we find that the claim in suit there read (121 U. S. pp. 617, 630):

> "the combination of the cylinder A, piston G, piston-rod D, slotted rod C, and crank B, *when constructed and operated substantially as described.*" (Italics ours.)

As said in the *Paper Bag Case* that was "a case where a claim was limited by a description of the device, with reference to the drawings." No such limitation appears in claim 1 of the Smith patent. The claim of the Smith patent concludes with the expression "for the purpose specified." Not in the *manner* or *mode* specified but *for the purpose specified.* The purpose specified in the Smith patent is a "method * * * particularly designed for extensive operations wherein a chamber of large dimensions is adapted to contain thousands of eggs in separate trays arranged in tiers and the method of heating is such that the heated air is adapted to the eggs in various stages of incubation." (p. 1, ls. 8 to 15.)

Even if Smith had not thought of any other arrangement of eggs to accomplish results sought for, and for this reason the specification did not disclose any alternative, this would be a matter of no consequence; for he was not required to state all of the possible permutations in which the eggs may be set and still accomplish the objects of his invention.

(3) The claim should not be limited so as to deprive the patentee of his actual invention:

The Court below did not give to the Smith patent that fairness of treatment to which it is entitled in view of the invention actually made and what it has accomplished in this art.

The Smith invention has completely revolutionized the art of incubation and its claim is entitled to cover what accomplished that great advance. Its commercial success

and acceptance in the trade, accompanied by the widespread adoption of its principles and the complete replacement of old processes in this art, entitle it to something other than a forced narrow interpretation of the claim.

> "Where an invention is one of a primary character, and the mechanical functions performed by the machine are, as a whole, entirely new, all subsequent machines which employ substantially the same means to accomplish the same result are infringements, although the subsequent machine may contain improvements in the separate mechanisms which go to make up the machine." (*Morley Machine Co.* v. *Lancaster,* 129 U. S. 263, 273.)

The Court, in the present case, said (Vol. II, p. 989):

> "Appellee contends for a broad scope while appellants urge a very narrow scope."

Admittedly, therefore, the Court adopted the "very narrow scope" for which the defendant contended. In so doing it brushed aside entirely those considerations which should have weighed in the scale in favor of the Smith patent. Smith undoubtedly changed the entire course and practice of incubation by just what is recited in his claim, and his invention has been adopted and followed by every worker in the art since. His conception, as we have pointed out, has been the foundation of an immense business, and has been the inspiration for countless imitators so that this patent has been the subject of possibly more infringement suits than any patent issued within recent years. The Court refused to follow the established rule which was laid down by this Court in dealing with inventions of this type. As stated in *Eibel* v. *Paper Co.,* 261 U. S. 45-63:

> "In administering the patent law the court first looks into the art to find what the real merit of the alleged discovery or invention is and whether it has advanced the art substantially. If it has done so, then the court is liberal in its construction of the patent to secure to the inventor the reward he deserves."

The narrow interpretation of the claim in suit imposed by the Eighth Circuit robs Smith of the fruits of his invention by permitting inconsequential changes which do not alter the fundamental principles of incubation which he first promulgated.

As stated in *Winans* v. *Denmead,* 15 How. 330, 341:

> "There being evidence in the case tending to show that other forms do in fact embody the plaintiff's mode of operation, and, by means of it, produce the same new and useful result, the question is, whether the patentee has limited his claim to one out of the several forms which thus embody his invention.
>
> "Now, while it is undoubtedly true, that the patentee may so restrict his claim as to cover less than what he invented, or may limit it to one particular form of machine, excluding all other forms, though they also embody his invention, yet such an interpretation should not be put upon his claim if it can fairly be construed otherwise."

And as said in *McClain* v. *Ortmayer,* 141 U. S. 419, 425:

> "It is true that, in a case of doubt, where the claim is fairly susceptible of two constructions, that one will be adopted which will preserve to the patentee his actual invention."

As stated in the *Brake Beam* case (106 F. 693-715):

> *"That interpretation which sustains and vitalizes the grant should be preferred to that which strikes down and paralyzes it."*

(4) The prior art emphasizes that Smith's claim should not be limited:

None of the prior patents or uses approaches the Smith invention or in any way requires limitations to be placed about Claim 1, which would relieve the respondent of the charge of infringement. A consideration of them merely serves to emphasize that the Smith claim should be construed as we have outlined, and to cover what it expresses.

The reference upon which the respondent primarily relied in the Courts below, was the German patent to Stulik, No. 155,917, taken out in 1901 (Vol. II, 729).

This is the most venerable of all the old chestnuts which have been examined by the Courts and rejected as failing to anticipate Smith. It was cited by the Patent Office and the claims allowed over it. It has also been in the *Cooley, Hillpot, Blum* and *Waxham* cases, and the patent has been sustained over it. We had supposed that this patent had been laid away so effectively in the *Hillpot* case that its ghost would never walk again.

In Stulik, trays of fresh eggs are introduced at the bottom of the chimney or stack, and as incubation progresses are moved upwardly in the stack, trays of fresh eggs being inserted at the bottom. The eggs are subjected to an upward rising current of warm air which strikes the cool eggs first, then going to the advanced eggs and *then leaving by the chimney.* There is, therefore, no forced draft, no closed circuit or recirculation of air, and as the air which passes over the hot eggs never returns to the cold eggs there is no heat transference from hot to cold eggs. As stated by Judge Woolley (24 F. (2) 341, 343):

> "The movement of motor driven heated air in Smith is unlike the movement of heated air in the German patent to Stulik, No. 155,917, 1901, confidently cited by the respondent, where it starts at the bottom of a chamber, ascends straight up through trays of eggs of different temperatures and goes out at the top. In Smith, after the air enters, there is no quick exit. The first requisite is a closed chamber and from this chamber no air, except foul air, escapes; the main body is retained in the chamber and is moved in cycles through the corridor and egg columns, around and around, on and on, without any defined end. If, as in Stulik, the air entered, ascended and departed, passing the eggs but once, then, manifestly, the heated air in order to pick up heat units from warm eggs and use them in warming cool eggs must first strike the warm eggs—those in the more advanced stage of incubation."

So Stulik could never accomplish the results accomplished by Smith.

Much emphasis was laid upon the Proctor patent 426,321 for driers (Vol. II, 769) and the Schwartz patent No. 535,175 (Vol. II, 829) for processes of tobacco ordering. The problems and conditions required for the successful performance of egg hatching are so remote from the problems and conditions required for the successful performance of these references, that there is no analogy despite superficial resemblance in machines.

These patents have been before the Courts in other cases and have been rejected as inadequate. See the remarks of Judge Westenhaver in the *Blum* case and Judge Woolley in the *Cooley* case.

The general art of heating and ventilating is also remote and offers no suggestion of the solution of the mass hatching of eggs. The reference to the heating and ventilating system for the Senate room of the Capitol and the other patents on heating and ventilating living rooms are inapplicable to the problems here involved. In this connection, see the language of Judge Westenhaver in the *Blum* case:

> "I do not agree that Smith's invention is in an art so closely analogous to heating and ventilating that it is anticipated or deprived of patentable novelty by devices found in the latter art, even though by slight changes the same might be made available to hatch eggs." (17 F. (2) 456-7.)

The Court of Appeals of the Sixth Circuit agreed with Judge Westenhaver for it has, as noted, repeatedly sustained the validity of the Smith patent.

The other patents cited by the respondent relating to incubators have been considered by the Patent Office and by the Courts in earlier cases. The small cabinet machines have no bearing upon the Smith invention for they lack both staged incubation and forced draft.

The Winkler patent No. 286,756 (Vol. II, 615) also cited by the Patent Office shows a very peculiar style of incubator, in that the eggs are carried upon a moving chain or conveyor, through a series of turns or convolutions, the eggs rolling along inclined platforms and dropping over pulleys until they are delivered at the bottom of the machine, and chicks are supposed to be hatched on an endless belt. Whatever convection currents would be set up in the device would be entirely inadequate to equalize the temperature throughout the machine, and this conclusion is reinforced by the fact that Winkler makes special provision for heating the various sections or runs of the conveyor to different temperatures by arranging to have the hot water pans hotter over the cold eggs than over the eggs in the more advanced stage of incubation. There is no movement of the air in a cycle through the machine. This patent issued in 1883, may we believe, be regarded as an impractical, crude, inoperative device, having no effect upon the art, and entirely without merit. It is one of those attempts to solve the problem which remained unsolved until Dr. Smith pointed the way.

In the Zimmer patent No. 1,075,747 (Vol. II, 801) the eggs are set in shallow trays, one tray a day, for ten days until a stack of ten trays is obtained with the oldest tray at the top. Heavy feather mats are placed between the several trays. Heat is applied during the first ten days, and the incubator is closed up tight. No air can get to the eggs, and when the operator wants to perform the necessary turning of the eggs, the whole stack must be taken out and replaced in the incubator. At the end of twelve days the whole stack of trays is taken out of the chamber and reversed in order, with the oldest eggs at the bottom of the stack and no fresh eggs are added thereafter. There is, therefore, no period when the oldest hottest eggs and the newer coldest eggs are in the same chamber. The weight of the superposed eggs is supported by the underneath eggs, and as the eggs "expand by heat," the pressure of the

eggs above "disintegrates" the shells. What happens to the embryo within the shell with the weight of the eggs on top of it, closed in by feather mats above and below, and with fresh air excluded from it, is apparent. In addition to these extremely uncomfortable conditions it is subjected to the heat given off by itself and the hundreds of embryos about it. As a result the embryo, if it ever started to live, would be cooked to death within the closed pot of the Zimmer patent.

The Zimmer patent is the most modern of the citations on staged incubation and is the high point in the art prior to Dr. Smith. It is such an absurd scheme upon its face, that it must be rejected as not pertinent.

This leaves for consideration the vague and admittedly incomplete description of the incubator in Ure's dictionary (Vol. II, 805). This is said to represent a method of incubation employed by the Frenchman, Bonnemain, before the French Revolution, *and not used since.*

As stated by the Supreme Court in *Cohn* v. *United States Corset Co.,* 93 U. S. 366-370:

> "It must be admitted that, unless the earlier printed and published description does exhibit the later patented invention in such a full and intelligible manner as to enable persons skilled in the art to which the invention is related to comprehend it without assistance from the patent, or to make it, or repeat the process claimed, it is insufficient to invalidate the patent."

See also *Robinson on Patents,* Sec. 329, Vol. I, page 450:

> "The invention described in the publication must be identical in all respects with that whose novelty it contradicts. The same idea of means, in the same stage of development, as that which the inventor of the later has embodied, must be thereby communicated to the public. The invention thus described must also have been a complete and operative art or instrument, ready for immediate employment by the public."

This publication shows a room in which eggs are to be placed at daily intervals. The room is heated by a continuous length of pipe through which hot water is to be conducted. No provision is made for the different heat requirements of the eggs in the various stages of incubation; and the advanced, heat producing eggs are subjected to the same conditions as the earlier, heat absorbing eggs. There is no provision for forced draft. As stated by Mr. Taggart (Vol. I, 406):

> "I do not doubt but what the operators would get a few chicks, but it certainly would not be commercially operative in that day, and it is not today."

The fact that the scheme shown has never been revived or used since the days of the French Revolution is sufficient to condemn it as impractical. It certainly does not affect the Smith invention.

The testimony of Mr. Taggart (Vol. I, p. 400) drawn from his knowledge of the practical art, as to the various unsuccessful attempts to practice staged incubation confirms the silent evidence of the sterile, impractical paper patents of the prior art. The respondent's insistence upon the use of the forced draft in his machine attests most strongly to the necessity of the Smith combination for successful commercial hatching.

It is a wholly erroneous notion, harbored at one time by the respondent, that Dr. Smith's experimental work leading up to the invention or "public use" in the years 1913 and 1914, limited in some way the scope of the Smith patent. At the same time that Dr. Smith added the step of staged incubation to his process he also added the curtains at the sides of the central corridor better to direct through the cabinet the comparatively feeble air currents propelled by the small fans which he then employed.

The fact that Dr. Smith added the curtains to his machine in the year 1915 has been seized upon by numerous defendants, including this respondent, as the differentiation between the Smith "prior use" and the Smith

invention. They have either overlooked or deliberately mislead certain Courts into the erroneous belief that the presence of the curtains was the *sine qua non* of the Smith invention. (See p. 9, *supra.*)

We believe that the history of the Smith invention (pp. 9-11, *supra*) successfully disposes of all contentions for non-infringement based upon the omission of curtains or partitions in the interior of his cabinet. *The curtains or partitions do not appear in the claim nor do they have to be read into the claim in order to save it from anticipation by Smith's prior use.*

Nor is it possible, under well settled rules of law, to use the incomplete and imperfect efforts of Smith to restrict his successful completed invention.

As stated by the Court in *Smith & Griggs Mfg. Co.* v. *Sprague,* 123 U. S. 249-255:

> " 'The present case is that of a machine which was imperfect, and which demanded and received the continuous experiments of the inventor to remedy the defects in its organization. It is not true that the inventor cannot safely use for profit such a machine in its imperfect state, lest two years should elapse during the experimental period before the invention is completed and the patent is applied for.' *Sprague* v. *Smith & Griggs Mfg. Co.,* 12 Fed. Rep. 721.
>
> "We think this view might be correct and applicable to the case if the invention of the complainant, which he sought to embody and protect by the patents, consisted of the entire machine as he ultimately constructed and operated it, considered as a unit; for, in that view, it would have been imperfect and incomplete, and merely experimental, until it had received from its inventor every element necessary to its operation."

It has been made clear, therefore, that no one, even including Smith in 1913 and 1914, had, prior to the invention here in suit, brought together the steps of forced draft and staged incubation, and it was the lack of this combination that crippled and confined the prior art. It

was the successful combination of these steps in the patent which opened the way for the substantial advance which had its origin and inception in Smith.

(5) Neither adding improvements nor decreasing efficiency avoids infringement:

At various times during this litigation the respondent has argued that, as he employed a somewhat modified type of apparatus from that shown in the Smith patent, he did not infringe. Such apparatus details are, of course, immaterial when the question of infringement of a process or method patent is involved, for as stated by this Court in *Cochrane* v. *Deener,* 94 U. S. 780-788:

> "A process is a mode of treatment of certain materials to produce a given result. It is an act, or a series of acts, performed upon the subject-matter to be transformed and reduced to a different state or thing. If new and useful, it is just as patentable as is a piece of machinery. In the language of the patent law, it is an art. *The machinery pointed out as suitable to perform the process may or may not be new or patentable;* whilst the process itself may be altogether new, and produce an entirely new result. The process requires that certain things should be done with certain substances, and in a certain order; but *the tools to be used in doing this may be of secondary consequence.*"

And in *Carnegie* v. *Cambria,* 185 U. S. 403, 441:

> "It" (a process patent) "professes to disclose a method of procedure, not the particular instrumentality that may be employed."

And *Leeds & Catlin* v. *Victor Talking Machine Co.,* 213 U. S. 301-318, is particularly apt:

> *"A process and an apparatus by which it is performed are distinct things. They may be found in one patent;* they may be made the subject of different patents."

Such apparatus details are the design and location of the fans, the omission of the "curtains" used by Smith to direct the flow of air from the fans from an "adjacent chamber" into the lowermost portion of his incubator cabinet. Such details are obviously immaterial to a consideration of claim 1. *Other* claims include these details; claim 4 includes the curtains, claim 2 includes the adjacent chamber. Claim 1 includes none of these details. Smith showed a particular type of incubator to perform the process in accordance with the terms of claim 1, but in so doing he was merely following the necessary requirements that an inventor illustrate some means by which his invention may be carried out, and there was no intent upon Smith's part that his process was to be confined to the use of that apparatus.

> "As the apparatus shown in a process patent is only to show that the process may be practically applied, it follows that such illustrative apparatus does not limit the process patentee to that type of machine alone." (*Moore Filter Company* v. *Tonopah-Belmont Development Co.*, 201 Fed. 532-541, C. C. A. 3.)

It may be stated that none of these *apparatus* considerations disturbed the Circuit Court below. No courts have so far strayed from the fundamental principles of patent law as to hold that the Smith *process* is limited to the use of the *apparatus* shown in his patent.

Nor does the fact that respondent uses a current moving in a horizontal plane avoid claim 1; the limitation as to the vertical current was reserved by Smith in narrower claim 3.

The changes which the respondent has made in adopting the Smith invention are colorable changes merely, which do not alter the basic combination of staged-incubation and forced-draft, which is characteristic of the Smith invention.

Respondent has no partitions, but this does not avoid claim 1 because he obtains the same results by increasing

the velocity and volume of his current so that no partitions are necessary.

The sole function performed by the curtains in the Smith machine is to insure that the air as it leaves the fans overhead will reach the lowermost hatching trays (Vol. I, p. 78). It is perfectly obvious that the same results could be obtained in the Smith machine without curtains by increasing the fan power slightly (Vol. I, p. 130). The curtains are, in truth, but a refinement of apparatus and their presence or absence in no way makes or destroys the basic principle of current circulation in the Smith machine. Even with the curtains removed from the Smith machine the current of air will persist throughout the machine (Vol. I, p. 335). This was shown by Prof. Rowley's tests with and without the curtains. With the curtains the average speed of air flowing underneath the lowermost hatching tray in the Smith machine was 198 feet per minute. Without the curtains the average speed was 162 feet per minute, a difference of only 36 feet per minute (Vol. I, p. 256). It is obvious that this slight difference in speed of air at the point farthest removed from the fans could be easily compensated for by increasing the volume or velocity of the air from the fans, and placing them nearer the eggs, just as Snow has done. This fact was brought out in the examination of the defendant, Snow, by the District Court (Vol. I, pp. 159, 160).

Judge Westenhaver in the *Blum* case said (17 F. (2) 456-460):

> "In my opinion, it is not possible to procure either a current or column of heated air, functioning in the way pointed out in Smith's patent, without means for creating a forced draft, and without means for restricting more or less the channels through which it is driven. Smith's method cannot be practiced without these means."

With all due respect to the recognized ability of the late Judge Westenhaver, it requires only the minimum of

ingenuity to dispense with the curtains. It is done by the simple expedient of increasing the power of the fans and thus the velocity of the current. Respondent adopted that scheme.

The increase in volume and velocity is the mechanical equivalent of the curtains for it secures the same current movement of air as is secured in Smith. As the claims in suit do not specify how the current shall be secured, this change does not avoid infringement.

The respondent claimed that his incubator is superior to the Smith incubator in certain details of operation. These alleged advantages were not present, for the Snow incubator has never exceeded a 65% hatch (Vol. I, p. 164), whereas in the Smith machine the *average* hatch is 65% (Vol. I, p. 112).

Even were respondent's incubator an improvement over Smith in details and degrees, he utilizes the invention of Smith. It is a well known and well understood principle of patent law that a defendant does not avoid infringement by pointing out that he has improved upon the patent which he infringes.*

Respondent's machine is, in reality, not as efficient a machine as the Smith machine, as respondent is required by reason of the omission of curtains or partitions to move three to four times more air in order to obtain the same results in the same manner as in Smith's (Vol. I, p. 110). It is well settled, however, that a defendant does not

---

* *Temco Co.* v. *Apco Co.*, 275 U. S. 319, 328;
Cantrell v. *Wallick*, 117 U. S. 689;
Cochrane v. *Deener, supra*, 94 U. S. 780;
Hoyt v. *Horne*, 145 U. S. 302;
Union Tool Co. v. *Wilson*, 237 F. 837 (D. C. S. D. Cal., S. D.);
Otto Coking Co. v. *Koppers*, 258 F. 122 (C. C. A. 3);
Munising Paper Co. v. *American*, 228 F. 700 (C. C. A. 6);
Stockland v. *Russell*, 222 F. 906 (C. C. A. 8);
Reynolds Spring Co. v. *L. A. Young Ind.*, 36 F. (2) 150 (C. C. A. 6).

escape or avoid infringement by impairing the efficiency of the patented device.

> "It is not necessary that the defendant's cars should employ the plaintiff's invention to as good advantage as he employed it, or that the result should be precisely the same in degree. It must be the same in kind." (*Winans* v. *Denmead,* 15 How. 330, 344.)
>
> "When a party has invented some mode of carrying into effect a law of natural science or a rule of practice, it is the application of that law or rule which constitutes the peculiar feature of the invention. He is entitled to protect himself from all other modes of making the same application; and every question of infringement will present the question, whether the different mode, be it better or worse, is in substance an application of the same principle. *Curtis,* Sec. 320." (*Sewall* v. *Jones,* 91 U. S. 171, 184.)

The respondent in the courts below claimed a theory of operation based upon radiation, but radiation was necessarily present in the Smith process, as well, as was unwittingly admitted by Professor Rowley when he attempted to read that function in the Stulik patent (Vol. I, pp. 312-313). Were we to concede, which we do not, that there is any advantage gained by radiation in respondent's machine, this can be nothing more than an immaterial variation of Smith, for respondent cannot rely upon radiation to secure the results of even temperature. He uses and must use the forced draft of air. Were radiation the answer to the problem, he could omit his fans and avoid the Smith patent. The very fact that respondent insists upon the use of the forced draft of air belies the theory of radiation evolved by respondent's expert.

(6) Respondent copied from Smith:

It is interesting to note how respondent got into this business. It was through no originality on his part, but solely by copying others.

Respondent testified that he had been experimenting with and building incubators of his own design since the year 1909 (Vol. I, p. 163). According to his own admissions on cross-examination, he built an incubator like the Smith machine in the year 1924 (Vol. I, p. 167). That incubator was identical with the Smith machine, and respondent boasted that he had been able to "get by" without interference from Smith (Davis, Vol. I, p. 395).

Respondent and his wife testified that the machine was torn down at the end of the year, but this is doubtful in view of the fact that he continued to use this or similar machines during the succeeding years (Vol. I, pp. 377-379). In the fall of 1924 he wrote to the Smith Incubator Company negotiating for a Smith machine, saying, in a letter (Vol. II, p. 519) that:

> "We have been operating a double deck incubator for sometime; in a small way last spring, we converted this into a force draft machine, with very unsatisfactory results, so we dismantled it shortly after.
>
> As we have practically lost money on every turn of the baby chick business, it has been rather discouraging.
>
> In accordance with your literature which we have received from you regarding your incubator users, looks good.
>
> Up to date we have been undecided what to do, in regard to what machine to buy. Mr. Iseckson with the Buckeye Co., called on us yesterday and tried to sell us a Buckeye machine.
>
> We would like very much to own one of your machines but there is a considerable amount of money involved. Kindly quote us your very best terms.
>
> Also, what would your charges be if we built a machine like the Smith?
>
> Kindly let us hear from you at your earliest convenience."

This letter is a damaging bit of evidence for it is a confession by respondent that he could not build an incubator of his own design which would work.

During the succeeding years respondent purchased twelve Smith machines (Vol. I, p. 132) and grew and flourished, until he is now a large hatchery operator whose activities spread all over the State of Minesota (Vol. I, p. 165-6). Having operated twelve Smith machines, he became conversant with the operation thereof. But he was not content with the legitimate profits which he might make. He built and clandestinely operated three machines in the cellar of his plant which were identical copies of the Smith machine (Vol. I, pp. 375-396).

Later on and after a man named Robbins had gotten on the market with his machine, Snow substituted the Robbins fans for the Smith fans, and came out in the open with his machines.

There is not a new conception or idea in the entire respondent's machine. He copied the Smith machine even in detail. The size of the cabinet or housing is substantially the same. The egg trays are identical in size and spacing and are arranged with the same number in a stack and the same number of stacks on either side of the corridor. The corridor is the same as Smith in size and location and the heating coils are similarly arranged. The hatching trays are identical in size and proportion, and located in identically the same manner. The air inlet and exhaust holes are of substantially the same area. These things respondent took from Smith with a meticulous care to duplicate.

Respondent did not originate the fans or their location. These things he copied from the Robbins machine (Vol. I, pp. 95-97). He made his fans of the identical size, speed and design as the Robbins fans, mounting them in the same way and in the same relation to the air intakes.

As a matter of fact there is nothing original in the respondent's machine. In the main it is a copy of Smith. It differs from Smith in the specific fans which in turn were copied from another infringer.

Conclusion.

The prior art and the history of the Smith invention show that he made a very definite and radical improvement in an important industry.

The Smith patent is adequate to protect this invention. The essential features of staged incubation, forced draft, equalization of temperature, conservation of moisture, are all within claim 1 and nothing is in this claim which is not essential.

Reading claim 1 as it stands we find that it covers those essentials which the respondent in this case has seen fit to employ. Although Smith is entitled as a pioneer inventor to a broad interpretation of his patent, it is not necessary to use any liberality in treatment of the claim to find infringement here.

On the other hand, if claim 1 is to be construed to be no broader than the detailed description of the preferred form of the apparatus or the details of proceedure as found in certain portions of the specification, then we must subscribe to the principle that no patentee is allowed to cover variations of his disclosure, and a patent is no broader than its most detailed descriptive matter. This is not the intent of the patent law.

Respondent accomplishes the same results as accomplished by Smith, and he accomplishes them in the same way, namely, by the use of direct, defined, power driven currents through trays of eggs in varying stages of incubation and at different levels. The currents move through the egg trays in both Smith's and respondent's machines doing exactly the same work in exactly the same way. All that respondent has done is to make the current flow in a horizontal plane through his egg trays, instead of in a vertical plane as in Smith. Claim 1 is of sufficient breadth and scope to cover these modifications.

The respondent's machine is the direct result of the knowledge gained by the respondent in the years of successful operation of Smith machines. The intent of the respondent to copy and make use of Smith's development of mass hatching is shown by the meticulous copying of numerous details of the Smith machine and by his closely guarded operations for many years.

Respondent's variations over Smith are immaterial and colorable variations only of the Smith method. The method of the Smith patent cannot be avoided by changes in details of apparatus which do not affect the basic process disclosed by Smith, a process of which has revolutionized the art of incubation and elevated it from a subordinate auxiliary of the poultry business to a vast commercial industry, occupying a distinct field and giving profitable returns to many.

The case should be remanded to the Court of Appeals of the Eighth Circuit with instructions to hold Claim 1 valid and infringed.

Respectfully submitted,

CHARLES NEAVE,
ALBERT L. ELY,
AMASA C. PAUL,
MAURICE M. MOORE,
Of Counsel for Petitioner.

November, 1934.

FILE COPY

JUL 23 1934
CHARLES ELMORE CROPLEY
CLERK

Supreme Court of the United States

OCTOBER TERM, 1934.

DOCKET NO. 102

SAMUEL B. SMITH,

Petitioner,

vs.

E. H. SNOW, AND E. H. SNOW DOING BUSINESS AS SNOW'S HATCHERIES AND SNOW'S INCUBATOR CO., *Respondents.*

RESPONDENTS' BRIEF IN OPPOSITION TO PETITION FOR WRIT OF CERTIORARI TO THE UNITED STATES CIRCUIT COURT OF APPEALS FOR THE EIGHTH CIRCUIT.

JAMES F. WILLIAMSON,
RALPH E. WILLIAMSON,
Attorneys for Respondents.

Hayward Brief Co., 601-7 Fourth Ave. So., Minneapolis

INDEX TO SUBJECT-MATTER OF THE BRIEF.

Page

Section I. Decisions below 1
Section II. Subject-matter. Patent Claim Quoted..... 3
Section III. The Alleged Conflicting Decisions..... 5
Section IV. The Petersime Case 6
Section V. Prior Adjudications of the Smith Patent 1,262,860 Identified in the Appendix..... 6
Section VI. Jurisdiction 7
Section VII. The Respondents' Contentions..... 7
Contention No. 1—As to Specific Question Presented in Petition 7
Contention No. 2—As to the Alleged Conflict Between the 8th and 9th Circuits..... 9
Contention No. 3—As to Alleged Conflict Between the 8th and 6th Circuits..... 12
Contention No. 4—As to the Alleged Conflict Between the 8th and 3rd Circuits..... 16
Section VIII. Conclusion 18
Appendix—Prior Adjudications of the Smith Patent 1,262,860 Identified 20

TABLE OF CASES.

A. In Body of Brief:
Buckeye Incubator Co., et al., vs. Blum, 27 F. R. (2d) 333, C. C. A. 6th.....5, 12
Buckeye Incubator Co., et al., vs. Blum, Trial Court Decision, 17 F. R. (2d) 456.....5, 6, 12, 13, 14, 15, 18
Buckeye Incubator Co., et al., vs. Hillpot, Trial Court, 22 F. R. (2d) 855 5
Buckeye Incubator Co., et al., vs. Hillpot, C. C. A. 3rd, 24 F. R. (2d) 341 .....5, 6, 14, 16, 17, 18
Buckeye Incubator Co., et al., vs. Petersime, C. C. A. 6th, 19 F. R. (2d) 721.....6, 14, 15
Layne & Bowler Corporation vs. Western Well Works, Inc., et al., 261 U. S. 387..... 12
Smith vs. Snow, et al., Trial Court Decision (R. 20) unreported 1, 2
Snow, et al., vs. Smith, C. C. A. 70, F. R. (2d) 564..... .....2, 4, 5, 6, 8, 9, 10, 11, 12, 16, 18
Waxham vs. Smith, et al., 70 F. R. (2d) 457, C. C. A. 9th.... .....5, 6, 9, 10. 11, 12, 15, 18
B. In the Appendix:
Boling vs. Buckeye Incubator Co., et al., D. C. S. D. Ohio, Western Div., 33 F. R. (2d) 347.....20, 26
Buckeye Incubator Co., et al., vs. Blum, Trial Court, 17 F. R. (2d) 456 .....22, 25

Buckeye Incubator Co., et al., vs. Blum, C. C. A. 6th, 27 F. R. (2d) 333 25
Buckeye Incubator Co., et al., vs. Boling, D. C. Indiana (unreported) 20
Buckeye Incubator Co., et al., vs. Boling, C. C. A. 6th, 46 F. R. (2d) 925 26
Buckeye Incubator Co. vs. Cooley, D. C. N. J. April 23, 1925 (unreported) 21
Buckeye Incubator Co. vs. Cooley, C. C. A. 3rd, 17 F. R. (2d) 453 21
Buckeye Incubator Co., et al., vs. F. & H. Hatchery, et al., D. C. S. D. Illinois, Nov. 30, 1928 (unreported)..... 26
Buckeye Incubator Co., et al., vs. Hillpot, Trial Court, 22 F. R. (2d) 855 25
Buckeye Incubator Co., et al., vs. Hillpot, C. C. A. 3rd, 24 F. R. (2d) 341.....21, 26
Buckeye Incubator Co., et al., vs. Miller Hatcheries, Inc., D. C. E. D. Mo., March 6, 1929 (unreported)..... 26
Buckeye Incubator Co., et al., vs. Petersime, et al., D. C. S. D. Ohio, Sept. 17, 1926 (unreported)..... 22
Buckeye Incubator Co., et al., vs. Petersime, C. C. A. 6th, 19 F. R. (2d) 721..... 23
Buckeye Incubator Co., et al., vs. Wolf, D. C. 291 F. R. 253.. 20
Miller Hatcheries, Inc., et al., vs. Buckeye Incubator Co., et al., C. C. A. 8th, 41 F. R. (2d) 619..... 27
Smith, et al., vs. Jensma, Smith & Nampa Hatchery, D. C. Idaho, 1 Fed. Supplement, 999..... 28
Smith, et al., vs. Waxham, D. C. S. D. Cal. Central Div., June 30, 1932 (unreported) 27
Wolf vs. Buckeye Incubator Co., et al., C. C. A. 6th, 296 F. R. 680..... 21

Supreme Court of the United States

OCTOBER TERM, 1934.

SAMUEL B. SMITH,

Petitioner,

vs.

E. H. SNOW, AND E. H. SNOW DOING BUSINESS AS SNOW'S HATCHERIES AND SNOW'S INCUBATOR CO., *Respondents.*

RESPONDENTS' BRIEF IN OPPOSITION TO PETITION FOR WRIT OF CERTIORARI TO THE UNITED STATES CIRCUIT COURT OF APPEALS FOR THE EIGHTH CIRCUIT.

SECTION I.

DECISIONS BELOW.

The suit is an action in equity for the alleged infringement of the method claims 1 and 2 of the U. S. Letters Patent No. 1,262,860, granted to the petitioner, Samuel B. Smith, April 16th, 1918, entitled "Incubator." A copy of this patent appears in the record (R. 425).

The suit was brought in the Fourth Division of the U. S. District Court, District of Minnesota. Trial was had before district judge Joseph W. Molyneaux, and, on February 7th, 1933, he signed and filed his decision therein (R. 20); and, on February 11th, 1933, he signed and filed the interlocutory decree of said trial court (R. 24). Said trial court's decision has not been reported.

In said trial court's decision and decree, it was held and decreed that said relied-upon claims 1 and 2 of said Smith patent 1,262,860, were valid and had been infringed.

From the said trial court's said decree, the respondents appealed to the Circuit Court of Appeals for the 8th Circuit. The Appeal hearing was before Circuit Judges Stone and Sanborn and District Judge Wyman.

At the said Appeal hearing, the commercial specimens of the patented Smith machine and of the respondent's machine introduced into evidence, as exhibits, at the trial of the case in the District Court, were set up in the court room of the Circuit Court of Appeals in St. Louis and operated (without eggs) in the presence of said judges of said Court.

The decision of the said Circuit Court of Appeals for the 8th Circuit was filed April 12, 1934, is reported in 70 F. R. (2) 564, and appears in the record (R. 984). The decree of said Circuit Court of Appeals was dated and filed April 14th, 1934, and appears in the record (R. 991).

In its said decision and decree, the said Circuit Court of Appeals held and decreed that the said relied-upon claims 1 and 2 of said Smith patent 1,262,860, in suit, were valid but had not been infringed; and, in its said decree, said Court of Appeals reversed the decree of said trial court and ordered the bill of complaint to be dismissed.

Petition for rehearing was filed by the appellee in that case (the petitioner here) April 30th, 1934, and this was denied in an order of said Court of Appeals dated and filed May 5th, 1934 (R. 1005).

SECTION II.

SUBJECT MATTER. PATENT CLAIM QUOTED.

The Smith patent 1,262,860, in suit, purports to disclose "an improved apparatus and method" for hatching eggs in large quantities. The drawings illustrate and the specification describes a machine which constitutes the apparatus referred to in the first sentence of the second paragraph of the specification. In substance, it is represented or implied, that in the operation of this machine or apparatus, the alleged improved method of hatching eggs is carried into effect.

The Smith patent, instead of relating to a new and revolutionary process of incubation, which petitioner alleges, relates, at most, to a very limited and narrow improvement in a crowded and highly developed art. This is so well established by the prior adjudications of the Smith patent that no further comment on this point is deemed necessary.

Said Smith patent contains five claims, the first three of which relate to the alleged method of hatching a plurality of eggs and the other two of which relate to the apparatus or machine. Only the first of the said three method claims is here involved; and said claim 1 of said patent reads as follows:

> "1. The method of hatching a plurality of eggs by arranging them at different levels in a closed chamber having restricted openings of sufficient capacity for the escape of foul air without undue loss of moisture and applying a current of heated air, said current being created by means other than variations of temperature and of sufficient velocity to circulate, diffuse and maintain the air throughout the chamber at substantially the same temperature, whereby the air will be vitalized,

the moisture conserved and the units of heat will be carried from the eggs in the more advanced stage of incubation to those in a less advanced stage for the purpose specified."

The statement of the disclosure of the Smith patent made by Judge Stone in the decision of the C. C. A. for the 8th Circuit in the instant or Snow case is so clear and correct that no further detailed description thereof is here needed.

Respecting the circulation of the air, when the Smith incubating machine is in operation, however, one highly important additional fact should be noted in view of what is said on pages 8 and 9 of the petition.

In those statements it is implied that the same air is recirculated through the incubating chambers of the Smith machine in repeated cycles in the same condition. That implication is absolutely groundless. In the usage of the Smith machine, *no air is ever recirculated in the same condition.* Fresh air is being constantly sucked in to the air conditioning chamber of the machine, under the action of the fans, and a corresponding amount of used air is constantly being discharged through outlets located above the tiers of egg trays. In every cycle, the used air not discharged meets and is commingled with fresh air sucked in by the fans, and the whole of said mixed old and fresh air is moistened and heated before it reaches the eyes of the fans. The discharged air carries out with it enough of the carbon dioxide emitted by the eggs to prevent harmful accumulation thereof, and the fresh air drawn in supplies the necessary oxygen required for the incubating chicks.

In other words, it is this interchange and conditioning of the air during each cycle that vitalizes the whole composite body of air which is circulated through the corridor and

the tiers of egg trays in the Smith machine. It is this air that is revitalized and heated during each cycle that first strikes the eggs in the advanced stages of incubation and then moves onto the eggs in the earlier stages of incubation.

SECTION III.

THE ALLEGED CONFLICTING DECISIONS.

In the petition, it is alleged that the above identified decision of the U. S. Circuit Court of Appeals for the 8th Circuit, in the instant or Snow case, conflicts with each of three other earlier decisions of other United States Circuit Courts of Appeal, wherein claim 1 of this same Smith patent, 1,262,860, was adjudicated, to-wit:

(a) *Waxham vs. Smith, et al.,* decided by the Circuit Court of Appeals for the 9th Circuit, April 9th, 1934, reported in 70 F. R. (2) 457, and printed as an appendix to the petition (pp. 26 to 35).

(b) *Buckeye Incubator Co., et al., vs. Blum,* decided by the Circuit Court of Appeals for the 6th Circuit, July 6th, 1928, and reported in 27 F. R. (2) 333. The trial court's decision in said Blum case is reported in 17 F. R. (2) 456.

(c) *Buckeye Incubator Co., et al., vs. Hillpot,* decided by the 3rd C. C. A., Feb. 10th, 1928, and reported in 24 F. R. (2) 341. The trial court's decision in said Hillpot case is reported in 22 F. R. (2) 855.

SECTION IV.

THE PETERSIME CASE.

The title of this case in the Circuit Court of Appeals for the 6th Circuit was *Buckeye Incubator Co., et al., vs. Petersime, et al.* It was decided June 10th, 1927, and is reported in 19 F. R. (2) 721.

In the petition, page 3 thereof, it is stated, in substance, that the holding made by the 6th Circuit Court of Appeals in said Petersime case was the same as the holding made by the 8th Circuit Court of Appeals in the instant or Snow case.

SECTION V.

PRIOR ADJUDICATIONS OF THE SMITH PATENT 1,262,860 IDENTIFIED IN THE APPENDIX.

All of the contested prior adjudications of the Smith patent 1,262,860, in suit, wherein the method claim 1 thereof, was in issue, with the exception of the Waxham case in 9th C. C. A., are identified in the appendix to this brief, arranged in the order of the dates of the trial court's decisions, and accompanied by sufficient comment to make clear which thereof are pertinent and which thereof are non-pertinent, as to the question of the true meaning and scope of claim 1 of said Smith patent.

If these prior decisions be inspected and considered, it will be seen that there are only three prior adjudications reaching Circuit Court of Appeals which are of any controlling weight as to the true meaning and scope of said claim of said patent, to-wit, the adjudications in said Petersime case, in said Blum case and in said Hillpot case hereinbefore specifically identified.

SECTION VI.

JURISDICTION.

Respondents admit the jurisdiction of the Court.

SECTION VII.

THE RESPONDENTS' CONTENTIONS.

The respondents deny each and all of the "Reasons Relied on For Allowance of Writ" set forth on pages 14 to 17, inclusive, of the petition and deny each and all of the "Assigned Errors" specified on page 20 and argued about on pages 21 to 25, inclusive, of the petitioner's brief; and respondents make the hereinbelow identified contentions in opposition to the granting of said petition, to-wit:

CONTENTION NO. 1—AS TO SPECIFIC QUESTION PRESENTED IN PETITION.

The petition is fatally defective on its face.

The specific question submitted on page 6 of the petition reads as follows (italics ours):

> "Does an *infringer* avoid claim 1 of the patent by arranging the eggs *in a different order*, or by omitting the shifting of the eggs during the first eighteen days of incubation?"

A. By the usage of the word, "infringer," in the said question, it is obvious that only a moot question is presented. The question presupposes an infringement of the patent and as a result the desired answer is assumed or begged in the question itself. The Supreme Court does not pass on moot questions.

B. After presupposing an infringement, it is asked whether claim 1 of the patent would be avoided by arranging the eggs "in a different order." What is meant by "in a different order"? This expression must mean in a different order than the order disclosed in the patent; and, if so, the assumed method of incubation, including the step of arranging the eggs in a different order, is necessarily outside of the scope of the claim of the patent for lack of disclosure of the subject matter in the patent.

C. Even if the Supreme Court should find that arranging the eggs in a different order than that disclosed in the patent and omitting shifting of the eggs during the first eighteen days of incubation would not avoid infringement of the Smith patent, still there would be no basis for the issuance of the prayed-for writ; for this would not of itself be determinative of the correctness of the holding of the Circuit Court of Appeals of the Eighth Circuit on the question of infringement.

Non-infringement was found in the instant or Snow case on several grounds: One of these grounds was that claim 1 of the patent is limited by the disclosure in the patent to a method of incubation wherein an air current is used and this air current is a column of air passing through a column of eggs in a definite direction. The said Court found *as a fact* that in respondents' method of incubation there was no such air current. The Court's own language is as follows, appearing on page 568 of the reported case, to-wit:

> "As to the air currents, the arrangement is different. The conception and operation of appellee's device is a column of air passing through the column of eggs in a definite direction—from eggs in advanced stages to those less advanced. In appellants' device, the concep-

tion and operation is a wide, general diffusion of air kept moving around all of the eggs without relation—as to direction—to the location of eggs in particular stages of incubation. In fact, the arrangement of eggs by appellants could not permit of such directioning of air currents.

Thus differing in both essentials of the patent—arrangement of eggs and air current—from the device disclosed by the patent, appellants' device is not infringing."

CONTENTION NO. 2—AS TO THE ALLEGED CONFLICT BETWEEN THE EIGHTH AND NINTH CIRCUITS.

The decision of the Circuit Court of Appeals for the Eighth Circuit in the instant or Snow case does not conflict with the decision of the Circuit Court of Appeals for the Ninth Circuit in the case of *Waxham vs. Smith, et al.,* for the controlling reason that the differences between the two decisions do not involve any material questions of law but turn primarily on questions of fact.

In the Waxham case, the Circuit Court of Appeals for the Ninth Circuit did not undertake to determine the true meaning and scope of claim 1 of the Smith patent in suit when construed in the light of the disclosure of the patent and distinguished from the prior art and the estoppels arising from the file-wrapper record of the patent; but, on the contrary, said Court expressly stated that it made no attempt to determine this question. In the paragraph of said Court's decision beginning near the bottom of page 458 of the reported case, the Court first identified several of the prior adjudications of the Smith patent in suit and then, among

other things, made the following statement on page 459 (italics ours), to-wit:

> "In view of the decisions above referred to, interpreting the Smith patent, we deem it unnecessary to further discuss either the *nature or character of the invention* or to *describe the method of incubation covered by the Smith patent* or to attempt to define the *limitations placed upon the patent* by these decisions, which, in that regard are not entirely consistent."

The differences between the controlling facts in the instant case, and in the Waxham case may best be brought out by comparing statements of the Courts in the two cases in parallel columns:

The Eighth Circuit in the instant or Snow case. 70 F. R. (2d) 568.	*The Ninth Circuit in the Waxham case.* 70 F. R. (2d) 460.
"Appellants' device is based on an entirely different method. As to arrangement of eggs, it mixes up those in various stages of incubation —not in the same tray but as to trays, there is no part of the egg column set aside to eggs in a particular stage but trays of eggs in one stage are layered in with trays in other stages in a predetermined order. Another difference is that a tray is never moved when once placed in the col-	"There is a definite and continuous current of air utilized in the Waxham device moving at a velocity not materially different from the speed of the air current in the Smith patent, and accomplishing substantially the same purpose."

umn. As to the air currents, the arrangement is different. The conception and operation of appellee's device is a column of air passing through the column of eggs in a definite direction—from eggs in advanced stages to those less advanced. In appellants' device, the conception and operation is a wide, general diffusion of air kept moving around all of the eggs without relation—as to direction—to the location of eggs in particular stages of incubation. In fact, the arrangement of eggs by appellants could not permit of such directioning of air currents.

Thus differing in both essentials of the patent—arrangement of eggs and air current—from the device disclosed by the patent, appellants' device is not infringing."

From the above it will be seen that the Eighth Circuit in the Snow case found as a fact that there was no general current movement of air in the Snow machine, but, on the contrary, there was merely a general diffusion of the air. On the other hand, the Ninth Circuit in the Waxham case found

as a fact that there was a definite and continuous current of air used in the Waxham machine substantially the same as that of the Smith patent. These respective basic facts determined by the Circuit Courts of Appeals in the two different Circuits led the Eighth Circuit to declare that the patent was not infringed and led the Ninth Circuit to declare that the patent was infringed.

It is not denied but that the two Courts in the Eighth and Ninth Circuits took slightly different views as to the scope of claim 1 of the Smith patent but these differences were immaterial to the question of infringement in view of the wide differences between the respective status of fact in the two cases. There is no sufficient conflict between the two Circuit Courts of Appeals in the Eighth and Ninth Circuits to warrant issuance of the writ.

The situation is similar to that which existed in *Layne & Bowler Corporation vs. Western Well Works, Inc., et al.*, 261 U. S. 387, wherein a writ of certiorari had been granted for alleged conflict of decisions but wherein, at the hearing, it developed that there was no real conflict and the case was dismissed on the ground that the writ of certiorari had been improvidently granted.

CONTENTION NO. 3—AS TO THE ALLEGED CONFLICT BETWEEN THE EIGHTH AND SIXTH CIRCUITS—RE BLUM CASE.

There is no conflict, whatever, between the decision of the Circuit Court of Appeals for the 8th Circuit in the instant or Snow case, and the decision of the Circuit Court of Appeals for the 6th Circuit in the case entitled, *Buckeye Incubator Co., et al. vs. Blum*, decided July 6th, 1928, and reported in 27 F. R. (2) 333.

In this Blum case, the said Circuit Court of Appeals for the 6th Circuit affirmed the decision of the trial court, Judge Westenhaver, rendered February 14th, 1927, and reported in 17 F. R. (2) 456. Judge Westenhaver, in his decision, very carefully considered the disclosure of the Smith patent, the disclosures of the prior art and the estoppels arising from the file wrapper record of the Smith patent in suit, with a view of determining the true meaning and scope of the method claims 1 and 2 of the Smith patent there in suit and his conclusion was summarized in the following paragraphs taken respectively from page 461 and page 462 of the reported case:

> "Smith is not now entitled to have a construction which covers merely eggs in different stages of incubation in one chamber, with heated air applied to or forced about them. He made an effort to get claims broad enough to admit of this construction, and failed. He acquiesced in that rejection and accepted claims which called for the application of a current of air. This expression, whether we consider merely its normal meaning, or whether we determine its meaning from the disclosures of the specifications, or whether we determine the same from these repeated Patent Office rejections, must be held limited to a method which calls for the creation and driving by force of a current of air in some more or less definite or predetermined direction through a column of eggs arranged in an order which presents first to the current those in the most advanced stage. In my opinion, defendant has not appropriated this element or step of claim 1, and is not guilty of infringement. * * *
>
> "I still think that defendants" (machine) "has many

> limitations and disadvantages. Be that, however, as it may, its method is not Smith's invention, nor the method called for by the words in claim 1 'applying a current of air.' Even if Smith's invention is one of great merit, and his patent claims entitled to a liberal range of equivalents, it is not permissible to give those claims a construction broad enough to include a method which does not use or apply his current of air."

The Circuit Court of Appeals for the 6th Circuit affirmed said trial court's decree on the grounds stated in the last of the above quoted paragraphs of Judge Westenhaver's decision, without passing on the question of whether or not in the usage of the machine of the Smith patent, the heated current of air must first strike the eggs in the most advanced stage and then later pass to the eggs in earlier stages of incubation.

The hearing before the Circuit Court of Appeals for the 6th Circuit in the Blum case occurred July 6th, 1928, or several months subsequent to the decision of the 3rd Circuit Court of Appeals in the Hillpot case which was decided February 3rd, 1928, and the dictum appearing in the decision of the Hillpot case, written by Judge Wooley, was obviously called to the attention of the judges of the 6th Circuit Court of Appeals in the Blum case with a request that said 6th Circuit should modify its holding made in the Petersime case. The said 6th Circuit Court did not pass on the question whether its reasoning in the Petersime case was defective or not, but simply placed its affirmance of the trial court on the ground that the defendant in the Blum case did not use the current of air called for in the relied-upon method claims of the Smith patent.

On page 3 of the petition it is alleged that the Sixth Cir-

cuit Court of Appeals, in its decision in the Blum case, *receded* from its holding earlier made in the Petersime case, 19 F. R. (2d) 721, and expressed a view conforming to the views of the Ninth Circuit Court of Appeals in the Waxham case. This statement is repeated in petitioner's brief (p. 23). Said statements are not correct, but, on the contrary, are groundless. Said Court in said Blum case simply refused to pass on whether or not the method claims 1 and 2 of said Smith patent were limited to a circulation of air wherein the air current first strikes the eggs in the advanced stages of incubation and thereafter passes onto eggs in earlier stages of incubation.

The decision itself is short but makes the above stated facts distinct.

After referring to the assumed defect in its reasoning in the Petersime case, said Court (pp. 334, 335) made the following statement:

> "We think we need not consider the effect of this defect in the reasoning—if it is a defect—of our former opinion. The result in that case rests also upon the theory that the patent contemplates a distinct, or at least an identifiable, current of air flowing like a stream in one direction. Upon reconsideration, we are satisfied that this theory is correct. Whether there is such a fairly distinct current, as distinguished from the general agitation employed by the defendant here, and in less degree by the defendant in the Petersime case, is said to be of no practicable importance in achieving the successful result. Perhaps so; and yet dependence upon that theory in order to sustain the patent, is required, both by the proceedings in the Patent Office and by the prior art, including Smith's too old public use. Smith

learned or knew he must differentiate in this respect in order to get his patent.

The decree below is affirmed."

It will be seen from the foregoing quotation that the Sixth Circuit Court of Appeals in the Blum case affirmed the trial court's holding of non-infringement on the ground that Blum did not employ the current of air called for in claim 1 of the Smith patent. In other words, that Court of Appeals grounded its finding of non-infringement on one of the same identical grounds on which non-infringement by the respondent was founded in the instant case by the C. C. A. of the Eighth Circuit.

In other words, the decision of the Circuit Court of Appeals for the 6th Circuit in the Blum case instead of conflicting is in harmony with the decision of the 8th Circuit in the instant or Snow case.

CONTENTION NO. 4—AS TO THE ALLEGED CONFLICT BETWEEN THE 8TH AND 3RD CIRCUITS.

There is no conflict whatever between the holdings made by the C. C. A. of the 8th Circuit in the Snow case and the holdings made in the C. C. A. of the 3rd Circuit in the case entitled, *Buckeye Incubator Co., et al. vs. Hillpot*, decided Feb. 10, 1928, and reported in 24 F. R. (2d) 341.

The portions of said decision in the 3rd C. C. A. of the Hillpot case quoted on pages 10 to 12, inclusive, of the petition are mere *dicta*, and, in effect, were stated so to be directly in the decision itself. In the very next paragraph appearing on page 344 of the reported case, said Court made the following statement (italics ours):

"But the issue of infringement in this case does not

turn in law on such an interpretation of the claims alone, or in fact on what, as thus far stated, seems a mere reversal of the steps of the patented methods. *It turns on another fact, until now purposely omitted, and on its consequent air movement.* Looking for the invention by reading the claims in the light of the specification and the file-wrapper history of the patent prosecution, one fixed and definite thing is disclosed, first, with reference to its presence in the apparatus and next with reference to its use in the methods. That is a 'corridor' between tray tiers, and a corridor of a kind defined by its purpose. The specification describes this by saying:

'The invention comprises a wall chamber * * * subdivided longitudinally by two parallel rows of curtains *3* and *4* to provide a central compartment or corridor *5* and said compartments *6* and 7' (tray tiers).

This physical arrangement is provided specifically to perform the function of maintaining and directing the air current created by the motor-driven fan. Without such an arrangement the air would go where it pleased. With such an arrangement the air, confined in a corridor partitioned from the tray tiers by curtains, will move in a current or column to the point of outlet which usually is at the bottom of the corridor, when, after mushrooming, it will pass below the tiers and ascend through the egg trays in a current or column because it is confined there by the same curtains that first prevented its escape from the corridor. *The essence of the invention therefore is forced circulation of heated air in predetermined direction, or, stated differently, forced circulation of columns of heated air through columns of eggs.* * * * Yielding to the demands of the Patent

> Office that the 'circulation of air shall be included and defined,' Smith acquiesced in repeated rejections of his claims, proposed others and finally accepted those allowed, in each of which is embodied the conception of air movement by currents in defined channels."

Then after comparing the air circulation in the Smith and Hillpot machines, the said Court (p. 345) expressed its conclusion as follows:

> "We are constrained to find that Hillpot did not infringe the claims of the Smith patent in suit."

From the foregoing quotations, it will be seen that in the Hillpot case the said 3rd Circuit Court of Appeals placed its holding of non-infringement on one of the identical grounds that non-infringement was declared by the C. C. A. for the 8th Circuit in the instant or Snow case. In other words, the holdings of the said two Courts are harmonious.

SECTION VIII.

CONCLUSION.

It is respectfully submitted that, in the foregoing portions of this brief, it has been conclusively shown (1) that the petition is fatally defective on its face and (2) that no conflict on any material question of law exists between the decision of the 8th Circuit Court of Appeals in the instant or Snow case, and any of the other alleged conflicting decisions of other Circuit Courts of Appeals identified in said petition.

In other words, the respondents have shown that the petitioner's alleged "Reasons Relied On For Allowance Of Writ" (stated on page 14 of the petition) are all ground-

less, and that positive reasons of controlling weight have been specified conclusively showing why the prayed for writ should not be granted.

Therefore, the respondents respectfully pray that the said petition be denied.

Dated July 19, 1934.

E. H. SNOW, AND E. H. SNOW DOING
BUSINESS AS SNOW'S HATCHERIES
AND SNOW'S INCUBATOR COMPANY,
Respondents.

BY JAMES F. WILLIAMSON,
RALPH E. WILLIAMSON,
Attorneys.

APPENDIX.

Prior Adjudications of the Smith Patent 1,262,860, Identified.

Buckeye Incubator Co. & Samuel B. Smith vs. Bert W. Boling, Trading as the Brownstown Poultry Farm, at Brownstown, Indiana:

This was Equity case 812 in the U. S. District Court for the District of Indiana, Indianapolis Division. The case was tried before district judge Thomas W. Slick in January, 1926, who dismissed the plaintiff's bill of complaint for non-infringement in a decree signed and filed by him February 8, 1926, and which became final. This case was not reported but is referred to in the decision of district judge Hough in a later case entitled, *Boling vs. Buckeye Incubator Co., et al.,* D. C. S. D. Ohio, May 18, 1929, reported in 33 F. R. (2) 347, wherein the structure and mode of operation of the Boling incubator involved in said Indiana case, was described on pages 340-351 of judge Hough's decision.

Buckeye Incubator Co., et al. vs. Wolf, D. C. N. D. Ohio, May 9, 1923, 291 F. R. 253:

Two of Smith's patents were sued upon, including the one numbered 1,262,860 and all the claims thereof were in issue and were held to be valid and infringed, but said judge Westenhaver made no effort to determine the exact meaning and scope of the relied-upon claims, but, on the contrary, on page 256 of his decision made the following statement, to-wit:

"The claims need not be specifically stated. No question of invention or infringement turns on a close construction of all or any of the claims."

Wolf vs. Buckeye Incubator Co., et al., C. C. A. 6th, March 4th and April 11th, 1924, 296 F. R. 680:

> The decree of the trial court by judge Westenhaver was affirmed without any effort on the part of the Circuit Court of Appeals to determine the exact meaning and scope of the relied-upon claims 1 and 2 of the Smith patent.

Buckeye Incubator Co. vs. Cooley, D. C. N. J., Apr. 23rd, 1925:

> The decision of the trial court in this case was rendered by district judge Bodine but has not been reported. The method claims of the Smith patent 1,262,860, were in issue and held valid and infringed, but no effort was made to determine the exact meaning and scope of said claims.

Buckeye Incubator Co., et al. vs. Cooley, C. C. A. 3rd, Feb. 8th, 1927, 17 F. R. (2) 453:

> The trial court was here affirmed as to the validity and infringement of the method claims 1, 2 and 3 of the Smith patent 1,262,860, but no effort was made to determine the exact meaning and scope of said claims. The decision of said Circuit Court of Appeals was written by circuit judge Wooley, who also wrote the decision of said Court in the Hillpot case, 24 F. R. (2) 341, and, in the first sentence of the third paragraph on page 342 of that decision, made the following remark in respect to the Cooley case, to-wit:
>
> > "In the Cooley case, infringement was so plain there was no occasion to construe the claims."

A similar remark, applying both to the Wolf case and the Cooley case was made by judge Westenhaver in his

decision in the Blum case, 17 F. R. (2) 456, wherein on page 457, he made the following statement (italics ours):

> "Defendant uses an incubator known as the Aero, made by the Aero Incubator Company, Springfield, Ohio. The question in this case is whether the hatching method of this apparatus is an infringement. It is an open question now to be determined *for the first time.* In the former litigation, the apparatus held to infringe was an exact copy of Smith and it was unnecessary to determine with exactness the scope of the method claims. It was then said: 'No question of invention or infringement turns on a close construction of all or any of the three claims.'"

Buckeye Incubator Co., et al. vs. Petersime, et al., D. C. S. D. Ohio, Western Div.:

In this case, an oral decision was rendered by district judge Hickenlooper, June 30th, 1926, and a written memorandum thereof was approved Sept. 17, 1926. This decision is not reported but a copy thereof appears on pencil numbered pages 43 to 48, inclusive, of the Book of Decisions submitted to the trial court and to the Circuit Court of Appeals for the 8th Circuit in the instant case. In judge Hickenlooper's decision, it is not specifically stated which claims of the Smith patent were relied upon but in the decision of the C. C. A. for the 6th Circuit, 19 F. R. (2) 721, it is stated that the method claims 1, 2 and 3 were in issue.

Judge Hickenlooper made an extensive review of the prior art then before him and indicated that, in his judgment, Smith had made no contribution to that art involving patentable invention, but being constrained by a

prior decision of the Circuit Court of Appeals for the same Circuit, he treated the said claims as valid, but held, that when distinguished from the prior art the claims in issue were of narrow scope and distinguished from the method of hatching eggs practiced by defendant in that case and dismissed the bill for non-infringement. In the next to the last paragraph of judge Hickenlooper's decision, he made the following statement:

"* * * the patentee has voluntarily, and apparently, with reliance upon the idea that it was a marked step forward, included in each of his process claims the element of sequence in which the heated air would be applied to the eggs, first, to those of the most advanced stage of incubation, and last to those just placed in the incubator.

This element of the process is entirely lacking in defendant's device. There is no definite defined sequence of applying the air currents; the eggs are all in one chamber in which the air is thoroughly mixed and the heat is applied uniformly alike to all stages of incubation.

Under those circumstances we are constrained to hold whether viewed as a combination patent or as a process that there is no infringement."

Buckeye Incubator Co., et al. vs. Petersime, et al., C. C. A. 6th, June 10th, 1927, 19 F. R. (2) 721:

The hearing was before circuit judges Dennison, Moorman and Knappen. Circuit judge Moorman wrote the decision. In said decision the said Circuit Court of Appeals for the 6th Circuit did carefully consider and construe the method claims 1, 2 and 3 of said Smith pat-

ent and affirmed the trial court. In said decision said Circuit Court of Appeals pointed out the differences between the three method claims in issue and then, respecting claim 1, made the following statement:

> "It is thus to be seen that all of the claims call for a current of heated air limited in claims 2 and 3 to power-driven and vertically directed. The question is whether the broader phrase of claim 1, 'applying a current of heated air' includes the agitation of air, not in defined currents but so that it will produce a diffusion of heat units resulting in uniformity of temperature.
>
> Looking to the language of the claims, as indeed to the device that Smith uses, it would seem that he had in mind a process by which the warm air taken into the corridor would be currently directed, so as to strike first the eggs in the more advanced incubation, take to them the additionally needed oxygen, and carry the heat units therefrom to other parts of the two compartments, thus effecting in part, at least, a uniformity of temperature throughout the egg chambers. This interpretation, we think, is borne out by the specification."

Then after making some specific references to the specification of the Smith patent, the said Circuit Court of Appeals made the following statements:

> "The file wrapper history of Smith's patent tends to support the same conclusion. This conception of a current of air driven in a definite or predetermined direction is different, we think, from the Petersime process, by which diffusion of heat units and uniformi-

ty of temperature is obtained by the slow stirring or agitation of the air in the egg chamber.

Judgment affirmed."

Buckeye Incubator Co., et al. vs. Blum, D. C. N. D. Ohio, Feb. 14, 1927, 17 F. R. (2d) 456:

The decision was written by district judge Westenhaver. Claims 1 and 2 of the Smith patent 1,262,860 were held valid, but to be of such narrow scope, when distinguished from the prior art and the estoppels arising from the file wrapper record that they were not infringed by the defendant's method of hatching eggs and the bill of complaint was dismissed.

Buckeye Incubator Co., et al. vs. Blum, C. C. A. 6th, July 6, 1928, 27 F. R. (2d) 333:

The hearing was before circuit judges Dennison and Moorman and district judge Anderson. The trial court's holding of infringement was affirmed on the single ground that in the usage of the Blum machine Smith's current was not employed. Said C. C. A. did not pass on the question whether the other ground stated by the trial court was present or not.

Buckeye Incubator Co., et al. vs. Hillpot, D. C. D. N. J., Aug. 4, 1927, 22 F. R. (2) 855. Decision by district judge Bodine:

Claims 1 and 2 of Smith patent 1,262,860 were in issue and held to be of narrow scope when distinguished from the prior art and the estoppels arising from the file wrapper record and although treated as valid, were held not infringed by the defendant's method of hatching eggs and plaintiff's bill was dismissed.

Buckeye Incubator Co., et al. vs. Hillpot, C. C. A. 3rd, Feb. 10, 1928, 24 F. R. (2) 341:

> The hearing was before circuit judges Buffington, Wooley and Davis. The opinion was written by circuit judge Wooley. Careful independent effort was made to determine the true meaning of the method claims of said Smith patent and the trial court was affirmed.

Buckeye Incubator Co., et al. vs. F. & H. Hatchery, et al., D. C. S. D. Illinois, Nov. 30, 1928. Unreported:

> In this suit the patent was declared not infringed. Defendant in the suit had purchased incubators from the patentee's licensee and had merely increased the capacity of these incubators.

Boling vs. Buckeye Incubator Co., et al., D. C. S. D. Ohio, Western Div., May 18th, 1929, 33 F. R. (2) 347:

> This was a suit to restrain the defendants from bringing suits against plaintiff's customers in view of the prior adjudication in the Indiana case identified at the head of this list, and the prayed-for injunction was granted. The structure of the Boling incubator involved in the said Indiana case is described on pages 350 and 351 of this decision.

Buckeye Incubator Co. and Samuel B. Smith, Appellants, vs. Bert W. Boling, Appellee, C. C. A. 6th, Feb. 13, 1931, 46 F. R. (2) 925:

> The trial court reversed as to injunction and injunction dissolved.

Buckeye Incubator Co. & Samuel B. Smith vs. Miller Hatcheries, Inc., D. C. E. D. Mo., March 6, 1929:

> This case is not reported in the Federal Reporter but a copy of the decision appears on pages 83-87 of the Book

of Decisions hitherto referred to. All of the claims of the Smith patents 1,262,860 and 1,263,138 were in issue and held valid and infringed. Defendant's machines in that case, however, were simply original Smith machines which had been modified to get increased capacity and the trial court held this was not a matter of legitimate repairs but a reorganization in accordance with the Smith patent.

Miller's Hatcheries, Inc., et al. vs. Buckeye Incubator Co., et al., C. C. A. 8th, May 19th, 1930, 41 F. R. (2) 619:

The hearing was before circuit judges Booth and Gardner and district judge Sanborn. The decision was written by judge Booth. The trial court was affirmed. Under the Doctrine of Comity, the claims in issue were treated as valid because of the prior adjudications thereof and no attempt, whatever, was made to determine and state the exact meanings and scope of claims 1 and 2 of the Smith patent 1,262,860 in suit.

Samuel B. Smith and Buckeye Incubator Co. vs. Herbert A. Waxham, Doing Business as the Waxham Hatcheries, D. C. S. D. Cal., Central Division, June 30, 1932.

Claims 1 and 2 of the Smith patent 1,262,860 were held valid and infringed.

The case was not reported in the Federal Reporter or Supplement, but it appears on pencil pages 107 to 126 of the Book of Decisions hitherto referred to.

The case was tried before a master and his reports do not indicate on their faces that the entire prior art essential for consideration was before him or that he had given any due consideration to the estoppels arising from the file wrapper record of the Smith patent.

The district judge, Paul J. McCormick, approved the master's report in his order of June 30, 1932, but admitted therein that the question of infringement was a close one. His own words on that point are as follows:

> "The only debatable issue here is that of infringement because of the limitation as to order of eggs within the incubator under a proper interpretation of claim 1 of the Smith patent 1,262,860. *I believe this question to be close.*"

Samuel B. Smith and Buckeye Incubator Co. vs. Jensma, Smith & Nampa Hatcheries, D. C. Idaho, Oct. 7, 1931, Vol. 1, Federal Supplement, p. 999:

> Claims 1 and 2 of the Smith patent 1,262,860 were here held valid and infringed; but no attempt was made to determine the true meaning of said claims when distinguished from the prior art and the estoppels arising from the file wrapper record of the patent. The second paragraph of the said decision includes statements to the following effect (italics ours), to-wit:
>
> "* * * the issue of non-infringement is presented by the pleadings under the claims sued on. *No evidence was offered by the defendants* to refute the undisputed testimony of the plaintiffs, which clearly shows that the defendants have made and are using incubators embodying the inventions shown in plaintiff's patent, particularly, claims one and two thereof, in infringement of its rights."
>
> Then the last paragraph of said decision reads as follows (italics ours):
>
> "*No accounting for profits or awards for damages* are requested by the plaintiffs as they were waived at

the trial and the relief granted is the prayer of plaintiffs for an injunction."

From said quoted statements it is perfectly obvious that this was really not a contested case, but a case conducted practically with the consent of both parties for what amounts simply to a consent decree. It has the earmarks of a collusive suit. Obviously it has no weight as to the meaning and scope of claim 1 of the Smith patent 1,262,860 there in suit.

FILE COPY

FILED
NOV 26 19
CHARLES ELMORE

Supreme Court of the United States

OCTOBER TERM, 1934.

No. 102.

IN EQUITY.

SAMUEL B. SMITH,

Petitioner,

vs.

E. H. SNOW, AND E. H. SNOW, DOING BUSINESS AS SNOW'S HATCHERIES AND SNOW'S INCUBATOR COMPANY,

Respondents.

BRIEF FOR RESPONDENTS.

JAMES F. WILLIAMSON,
RALPH E. WILLIAMSON,
Counsel for Respondents.

Hayward Brief Co., 601-7 Fourth Ave. So., Minneapolis

SUBJECT INDEX.

	Page
Chapter I—Statement of the Case	1
Identifications	1
The Subject Matter Involved	4
The Relied on Claim Quoted	6

ARGUMENT.

Chapter II—Summary of Argument	7
Chapter III—The True Meaning of Relied on Claim 1 of the Smith Patent in Suit	11
The Problem of Egg Incubation	11
Section 1—The True Meaning of Claim 1 as Determined From the Patent Itself	13
Disclosure of the Smith patent No. 1,262,860 in suit	13
(a) As to the Structure of the Machine	14
(b) As to the Stated Mode of the Smith Machine's Operation	17
To What the Disclosed Process of Hatching Eggs is Confined	23
The Disclosure of the Patent is Limited to a Special Type of Stage Incubation	23
The Claim Does Not Call for Stage Incubation Except by Inference	25
The Patent Discloses that the Air is Never Recirculated in Closed Cycles—No Air is Ever Recirculated in the Same Condition—True Circulation Stated	26
Note As to the Smith Commercial Machine	38

Authorities as to Interpretation of the Patent Claims From the Specification of the Patent 38

Section 2—The True Meaning of Claim 1 of the Patent As Determined From the Prior Art. 43

The Patentee Smith's Prior Public Usage..... 43

Controlling Law as to Prior Public Use..... 48

Prior Patents and Other Publications..... 48

Bonnemain Incubator 49

Winkler Patent 52

Stulik Patent 58

Zimmer Patent 58

Partial Conclusion As to Stage Incubation..... 59

Guerin Patent 60

Bassini and Heyden Patent..... 61

Van Keuren Patent..... 62

Bell Patent 65

Koons Patent 67

Comment As to Patents and Publications Taken From Arts Analogous to the Incubating Art.. 67

Proctor & Knowles Patent..... 70

Goldstein Patent 72

Schmidt & Schutterle Patent..... 73

Peters & Hungerford Patent..... 77

Article from Knight's Dictionary..... 78

Section 3—The True Meaning of Claim 1 of the Patent As Determined From the File-Wrapper Record 79

Conclusion From the File-Wrapper of the Smith Patent in Suit..... 92

Section 4—The True Meaning of Claim 1 of the Smith Patent No. 1,262,860, As Heretofore Determined by the Courts..... 96

The Prior Adjudications of this Smith Patent 1,262,860, in Suit are Identified in the Appendix. 96
The Petersime Case..... 96
The Blum Case..... 101
The Hillpot Case..... 113
The Fallacious Dictum in the Hillpot Case..... 117
The Waxham Case..... 123
Conclusion as to the True Meaning of the Relied on Claim of the Smith Patent in Suit..... 127
Chapter IV—Non-Infringement 128
Some Matters Requiring Advance Consideration for Properly Weighing the Testimony..... 131
a. Tests of the Machines in Question by the Respective Parties to the Suit..... 131
b. As to the Two Experts..... 136
The Structure of Respondents' Incubator and the Hatching Method Carried Out by the Use of the Same 137
Verified Description of the Structure of Respondent's Incubator 137
The Hatching Method Practiced by Respondents. 141
Verification of the Fact that Respondents Do Not Circulate the Air in General Current Form When Carrying Out Their Hatching Method.. 147
No Reliance Can Be Placed on Petitioner's *Ex Parte* Test Data to Show the Air Movement in Respondents' Incubator..... 159
The Anemometer Readings and the Arrows on Pl. Ex. 12 to 12KK and 13 to 13KK Show Neither the True Air Movement Nor the True Velocity of Air Movement in Respondents' Incubator 160
Pl. Ex. 13 to 13KK and 22 and 23 Colored by

Taggart Do Not Show the True Air Movement in the Snow Incubator..... 164
Conclusion as to Non-Infringement..... 169
Chapter V—Some of the Fallacious Contentions in Petitioner's Brief 170
Fallacious Contention That Increasing the Volume and Velocity of Air Circulation is the Mechanical Equivalent of the Use of Curtains..... 171
Fallacious Contentions That the Claim Should be Given a Broad Interpretation..... 174
General Conclusion 177
Appendix—Prior Adjudications of the Smith Patent 1,262,860 Identified 178

TABLE OF CASES AND TEXT BOOKS CITED.

Page

Bemis, et al., vs. Stevens & Bros., C. C. N. D. Ill., 177 F. R. 717 135

Bethlehem Steel Co. vs. Niles-Bement Pond Co., 166 F. R. 880 135

Boling vs. Buckeye Incubator Co., et al., D. C. S. D. Ohio, 33 F. R. (2) 347 .....180, 184

Buckeye Incubator Co., et al., vs. Blum, D. C. N. D. Ohio, 17 F. R. (2) 456 .....94, 96, 101-110, 130, 179, 182

Buckeye Incubator Co., et al., vs. Blum, C. C. A. 6th, 27 F. R. (2) 333 ..3, 94, 96, 101, 110-112, 125, 130, 174, 183

Buckeye Incubator Co., et al., vs. Boling, D. C. Ind. Unreported 180

Buckeye Incubator Co., et al., vs. Boling, C. C. A. 6th, 46 F. R. (2) 965 184

Buckeye Incubator Co., et al., vs. Cooley, D. C. N. J. Unreported 178

Buckeye Incubator Co., et al., vs. Cooley, C. C. A. 3rd, 17 F. R. (2) 453 .....109, 179

Buckeye Incubator Co., et al., vs. Hillpot, D. C. D. N. J., 22 F. R. (2) 855 .....94, 96, 113-114, 183

Buckeye Incubator Co., et al., vs. Hillpot, Hillpot vs. Buckeye Incubator Co., et al., C. C. A. 3rd, 24 F. R. (2) 341 .....3, 94, 96, 113, 114-123, 125, 126, 128, 129, 131, 174, 179, 183

Buckeye Incubator Co., et al., vs. F. & H. Hatchery, et al., D. C. S. D. Ill. Unreported 183

Buckeye Incubator Co., et al., vs. Miller Hatcheries, Inc., D. C. E. D. Mo. Unreported 184

Buckeye Incubator Co., et al., vs. Petersime, et al., D. C. S. D. Ohio. Unreported 68, 96, 97, 109, 180

Buckeye Incubator Co., et al., vs. Petersime, et al., C. C. A. 6th, 19 F. R. (2) 721.....93, 96, 97, 98, 99, 101, 110, 113, 125, 130, 174, 180, 181

Buckeye Incubator Co., et al., vs. Stone, D. C. Ore. Unreported 179

Buckeye Incubator Co., et al., vs. Wolf, D. C. N. D. Ohio, 291 F. R. 253.....109, 178, 179

Burns vs. Meyer, 100 U. S. 671..... 94

Carnegie Steel Co. vs. Cambria Co., 185 U. S. 403..... 136

Carson vs. American Smelting & Refining Co., C. C. A. 9th, 4 F. R. (2) 463..... 135

City of Elizabeth vs. American Nicholson Pavement Co., 97 U. S. 126..... 48

Expanded Metal Co., et al., vs. Board of Education of City of St. Louis, et al., C. C. A. 8th, 111 F. R. 395.... 40

Hall vs. MacNeale, 107 U. S. 90 48

Hillpot vs. Buckeye Incubator Co., et al., Buckeye Incubator Co., et al., vs. Hillpot, C. C. A. 3rd, 24 F. R. (2) 341 .....3, 94, 96, 113, 114-123, 125, 126, 128, 129, 131, 174, 179, 183

Houser, et al., vs. Starr, C. C. A. 6th, 203 F. R. 364.... 94

Hubbell vs. United States, 179 U. S. 77.....93, 94

Haggerty, et al., vs. Rawlings Manufacturing Co., C. C. A. 8th, 14 F. R. (2) 928..... 41

International Crown Tooth Co. vs. Gaylord, 140 U. S. 55 48

I. T. S. Rubber Co. vs. Essex Rubber Co., 272 U. S. 429 .....93, 94

Jewell Filter Co. vs. Jackson, C. C. A. 8th, 140 F. R. 340 41

Jones vs. Cyphers, C. C. A. 2nd, 126 F. R. 753..... 69

Keystone Bridge Co. vs. Phoenix Iron Co., 95 U. S. 274. 94

Kokomo Fence Machine Co. vs. Kitselman, 189 U. S. 8.. 93

Kuehmstad vs. Farbenfabriken of Elberfeld Co., C. C. A. 7th, 179 F. R. 701..... 135

Miller Hatcheries, Inc., vs. Buckeye Incubator Co., et al., C. C. A. 8th, 41 F. R. (2) 619..... 184
Mitchell vs. Tighlman, 19 Wallace 287..... 38
Morgan Envelope Co. vs. Albany Paper Co., 152 U. S. 425 93
Permutit Co. vs. Harvey Laundry Co., et al., D. C. W. D. N. Y., 274 F. R. 937..... 135
Plunger Elevator Co. vs. Standard Plunger Elevator Co., C. C. A. 1st, 165 F. R. 906..... 134
Railroad Co. vs. Mellon, 104 U. S. 112..... 94
Rawson & Evans Co., et al., vs. Atlas Glass & Mirror Co., D. C. N. D. Ill., 42 F. R. (2) 241..... 42
Roemer vs. Peddie, 132 U. S. 313..... 93
Root vs. Third Avenue Railroad Co., 146 U. S. 210.... 48
Seymour vs. Osborne, 11 Wallace 516.....38, 40
Shepard vs. Carrigan, 116 U. S. 593..... 93
Smith, Administratrix, vs. Magic City Kennel Club, Inc., et al., 282 U. S. 784..... 93
Smith & Griggs Mfg. Co. vs. Sprague, 123 U. S. 249.... 48
Smith, et al., vs. Jensma, Smith and Nampa Hatcheries, D. C. Idaho, 1 Fed. Supp. 999..... 185
Smith vs. Snow, et al., 17 Pat. Quar. 112..... 2
Smith, et al., vs. Waxham, D. C. S. D. Cal., Central Div. Unreported 185
Snow, et al., vs. Smith, C. C. A. 8th, 70 F. R. (2) 564.. .....2, 7, 8, 11, 13, 33, 35-37, 110, 112, 122, 125, 126, 127, 128, 129, 130, 176, 177
Walker on Patents (6th Ed.), Sec. 237..... 93
Waxham vs. Smith, et al., C. C. A. 9th, 70 F. R. (2) 457 .....3, 123-127, 131
Webber Electric Co. vs. Freeman Electric Co., 256 U. S. 668 93

Westinghouse vs. Boyden Power Brake Co., 170 U. S. 537 38
White vs. Dunbar, 119 U. S. 47..... 94
Wolf vs. Buckeye Incubator Co., et al., C. C. A. 6th, 296 F. R. 680..... 178
Worley, et al., vs. Loker Tobacco Co., et al., 104 U. S. 340 48

Supreme Court of the United States

OCTOBER TERM, 1934.

No. 102.

IN EQUITY.

ON WRIT OF CERTIORARI TO THE UNITED STATES CIRCUIT COURT OF APPEALS FOR THE EIGHTH CIRCUIT.

SAMUEL B. SMITH,

Petitioner,

vs.

E. H. SNOW, AND E. H. SNOW, DOING BUSINESS AS SNOW'S HATCHERIES AND SNOW'S INCUBATOR COMPANY,

Respondents.

BRIEF FOR RESPONDENTS.

CHAPTER I.

STATEMENT OF THE CASE.

IDENTIFICATIONS.

This is a suit in equity for the alleged infringement of claims 1 and 2 of the U. S. patent No. 1,262,860, entitled "Incubator" granted to the plaintiff-petitioner, Samuel B.

Smith, April 16, 1918, on an application filed by him in the U. S. Patent Office October 26, 1916.

The suit was brought in the Fourth Division of the U. S. District Court for the District of Minnesota. The defenses set up in the defendants' answer were invalidity of the relied upon claims of said patent in suit and the non-infringement thereof by the defendants.

The case was tried in November, 1932, at Minneapolis, Minnesota, before his Honor, Judge Joseph W. Molyneaux, District Judge. The decision of said trial court was filed February 7, 1933 (R. 20-24), not reported in Federal Supplement, but reported in 17 Pat. Quar. 112-114. In his said decision, Judge Molyneaux held the patent to be valid and the relied upon claims 1 and 2 thereof infringed. The said trial court's interlocutory decree (R. 24-26) was signed and filed on February 11, 1933.

From the said interlocutory decree the defendants appealed to the Circuit Court of Appeals for the Eighth Circuit and the cause was heard before their Honors, Circuit Judges Kimbrough Stone and John B. Sanborn and District Judge A. Lee Wyman, at St. Louis, Mo. The decision of said Circuit Court of Appeals for the Eighth Circuit was filed April 12, 1934, is reported in 70 F. R. (2) 564 and appears in the Record (R. 984). The decree of said Circuit Court of Appeals was dated and filed April 14, 1934 (R. 991).

In its said decision and decree the Circuit Court of Appeals for the Eighth Circuit held and decreed that the said relied upon claims 1 and 2 of said Smith patent 1,262,860 in suit were valid but had not been infringed and reversed the decree of said trial court and ordered the bill of complaint to be dismissed.

Petition for rehearing was filed by the appellee (the peti-

tioner here) April 30, 1934, and this petition was denied in an order of said Circuit Court of Appeals for the Eighth Circuit dated and filed May 5, 1934 (R. 1005).

Petition was then filed in this Court for a writ of certiorari directed to the Circuit Court of Appeals for the Eighth Circuit on the general ground that the said Circuit Court of Appeals had rendered a decision in the cause here at bar in conflict with other earlier decisions of the U. S. Circuit Courts of Appeal as to the meaning and scope of claim 1 of the Smith patent in suit.

Three of these alleged conflicting decisions were identified, to-wit:

> The decision of the Ninth U. S. Circuit Court of Appeals in the case entitled, *Herbert A. Waxham, et al., vs. Samuel B. Smith, et al.,* reported in 70 F. R. (2) 457, and now before this Court on a writ of certiorari directed to said Ninth Circuit Court of Appeals.
>
> The decision of the Third U. S. Circuit Court of Appeals in the case entitled, *Buckeye Incubator Co., et al., vs. Hillpot,* and *Hillpot vs. Buckeye Incubator Co., et al.,* reported in 24 F. R. (2) 341.
>
> The decision of the Sixth U. S. Circuit Court of Appeals in the case entitled, *Buckeye Incubator Co., et al., vs. Blum,* reported in 27 F. R. (2) 333.

The petition for writ of certiorari directed to the Eighth Circuit Court of Appeals in the instant case was granted by this Court in an order signed and filed by his Honor, Chief Justice Hughes, October 8, 1924.

The Subject Matter Involved.

On page 20 of the printed document containing Samuel B. Smith's petition for certiorari in the instant case appears the following heading and statement as to the assigned errors intended to be urged by the petitioner, to-wit:

"IV. SPECIFICATION OF ASSIGNED ERRORS INTENDED TO BE URGED.

The errors intended to be urged are:

A. The Circuit Court of Appeals erred in reversing the District Court and holding that the Snow incubator did not infringe claim 1 of the Smith patent-in-suit.

B. That the Circuit Court of Appeals for the Eighth Circuit erred in restricting claim 1 of the patent to a definite order or arrangement of eggs.

C. That the Circuit Court of Appeals for the Eighth Circuit erred in not holding the Smith patent valid and infringed.

D. That the Circuit Court of Appeals for the Eighth Circuit erred in ordering dismissal of the complaint.

E. That the Circuit Court of Appeals for the Eighth Circuit erred in not affirming the decree of the District Court; and

F. That the Circuit Court of Appeals for the Eighth Circuit erred in not granting the relief prayed in the bill of complaint."

On page 16 of the brief recently served and filed in this case on behalf of the petitioner appears the following heading and statement, to-wit:

"THE ERRORS ASSIGNED AND TO BE ARGUED.

The errors assigned in the petition for writ of certiorari and to be argued here are:

1. The Circuit Court of Appeals for the Eighth Circuit erred in restricting claim 1 of the patent in suit to the precise arrangement of eggs described in the specification of the patent.

2. The Court erred in holding that that claim is not infringed."

On comparison of the two different statements, it will be seen that the alleged error now numbered 1 in the petitioner's present brief does not appear in his petition for the writ of certiorari. The nearest approximation is the error which was alleged under the letter B on page 20 of the petition for the writ, but the two statements are, nevertheless, materially different in respect to the limitations stated. In the original petition, it was alleged that the said Court for the Eighth Circuit "erred in restricting claim 1 of the patent to a definite order or arrangement of eggs." In the petitioner's present brief, it is alleged that the said Court "erred in restricting claim 1 of the patent in suit to the precise arrangement of eggs described in the specification of the patent."

It will be seen, therefore, that the petitioner is now, in his present brief, seeking to raise a question which was not authorized in the writ of certiorari. It is, of course, obvious that there might easily be a definite order or arrangement of eggs, without this being the "precise arrangement of eggs described in the specification of the patent."

Obviously, the respondent is under no obligation to consider this new and unauthorized assignment of error.

From the foregoing, it is obvious that the writ of certiorari has brought the instant case here to this Court for review on the merits as to claim 1 of the Smith patent in suit; and that the issues are the same as they were before the trial court and before the Circuit Court of Appeals for the Eighth Circuit, to-wit, the validity and the infringement of said claim.

The Relied on Claim Quoted.

The said claim 1 of the Smith patent 1,262,860 in suit (Italics ours), reads as follows:

> "1. The method of hatching a plurality of eggs *by arranging them at different levels* in a closed chamber having restricted openings of sufficient capacity for the escape of foul air without undue loss of moisture and *applying a current of heated air*, said current being created by means other than variations of temperature and of *sufficient velocity to circulate*, diffuse and maintain the air throughout the chamber at substantially the same temperature, *whereby the air will be vitalized, the moisture conserved and the units of heat will be carried from the eggs in the more advanced stage of incubation to those in a less advanced stage for the purpose specified.*"

NOTE:

The structure of the machine of the Smith patent in suit and the hatching method disclosed therein is set forth in Chapter III of this brief.

The structure of respondents' machine and the hatching method carried out therein is set forth in Chapter IV of this brief.

CHAPTER II.

SUMMARY OF ARGUMENT.

It is our general contention that claim 1 of the Smith patent 1,262,860 in suit must be given the meaning accorded thereto by the Circuit Court of Appeals for the Eighth Circuit in the instant case—70 F. R. (2) 564.

More specifically stated, it is our contention that said claim 1 of said patent is limited, (a) by the disclosure of the patent itself; (b) by the prior art, including the patentee, Smith's, own prior public usage at dates more than two years before he applied for his patent, the proven prior patents and publications; (c) by the estoppels arising from the file wrapper record of the patent; and (d) by prior adjudications of the same claim of said patent by the U. S. Courts; in each and all of the following respects:

1. To a method of hatching eggs wherein air in a current form is caused to circulate within a chamber containing eggs. (This is not the same as forced draft.)

2. To a method of hatching eggs wherein a column of air is caused to move through a column of eggs.

3. To a method of hatching eggs wherein a special type of stage incubation is used including the shifting of eggs from one position to another successively as the incubation of the eggs progresses.

4. To a method of hatching eggs wherein a special type of stage incubation is used including locating the eggs in the earlier stages of incubation together in the upper part of a chamber and locating the eggs in the later stages of incubation together in the lower part of the same chamber.

5. To a method of hatching eggs wherein the air circu-

lated in a chamber containing eggs is confined to travel in definite paths by means of curtains or equivalent partitions.

6. To a method of hatching eggs wherein vitalized air is caused to move first to eggs in an advanced stage of incubation and thence to eggs in an earlier stage of incubation.

As a corollary to the above, it follows that respondents' method of hatching eggs does not infringe the relied on claim of the patent, if it does not respond in respect to each and all of the above specified limitations. It is respondents' contention that the hatching method used by respondents does not respond to the claim, when given its true meaning, in respect to any one of the above listed limitations.

To establish the above specified contentions, respondents will consider the disclosure of the Smith patent, the prior art, the file-wrapper record of the patent and the prior adjudications of the patent, in the order named, and will then, after the true meaning of the claim has been fully pointed out, consider the question of infringement of that claim.

Great emphasis, in the argument in this brief, is laid upon the limitations imposed upon the claim by the disclosure in the patent itself, for two reasons:

1. The Circuit Court of Appeals for the Eighth Circuit, in the instant case, did not deem that it was necessary to go beyond the face of the patent to find that claim 1 was so limited in scope that it was not infringed by respondents.

2. Petitioner rests his entire contention for infringement on a *false premise*. In petitioner's brief, page 6, it is stated:

> "It is a further essential that the process must be carried out in a substantially closed chamber in which the air passes over and over the eggs in repeated circuits or closed cycles."

Page 7, it is stated:

> "This means that the air is passing in repeated cycles over and over again through the same mass of eggs."

Page 8, it is stated:

> "It will also be observed that, if the air is moving in a closed cycle through the incubator, the position of the fan in that cycle is wholly immaterial."

Then on page 17, petitioner's brief writers make the following conclusion:

> "As substantially the same air repeatedly moves over all the eggs again and again, it is entirely immaterial in what order the eggs in different stages of incubation may be in the incubator. The currents of air persisting throughout the chamber transfer the heat from the older eggs to the fresher eggs no matter what the arrangement of the eggs may be."

By petitioner's statement that the air moves over and over the eggs in repeated closed cycles, it is necessarily implied that there is no beginning or end of a circuit of air travel and it is therefore necessarily implied that the air passing through and about all the various eggs at every point in the air circuit is in the same condition. It is further implied that the air is recirculated in the same condition in the hatching chamber after having been before circulated. That petitioner's said premise is false and that no air is ever recirculated in closed cycles or in the same condition in the hatching chamber or that the air passing through and about all the various eggs is not in the same condition at every point in the air cir- uit, is evident from the disclosure of the patent and this will be pointed out in the next chapter of this brief. As petitioner's said premise, as to air movement in closed cycles, is false, his conclusions based thereon that

the claim is not limited either to a columnar circulation of air through a column of eggs or to any special type of stage incubation or to a method wherein air is confined to travel in definite paths by means of curtains or equivalent partitions or to a method wherein vitalized air is caused to move first to eggs in the advanced stage of incubation and thence to eggs in an earlier stage of incubation is also false.

CHAPTER III.

ARGUMENT.

THE TRUE MEANING OF RELIED ON CLAIM 1 OF THE SMITH PATENT IN SUIT.

The Problem of Egg Incubation.

Before considering the Smith patent in detail, it is essential that certain vital facts governing egg incubation should be understood. These facts are concisely and correctly summarized by his Honor, Judge Stone, in the decision of this case by the Circuit Court of Appeals for the Eighth Circuit. These facts are not disputed by petitioner and they cannot be disputed. We, therefore, quote from Judge Stone's reported decision, 70 F. R. (2) 564, pp. 565-566:

> "The patent and this controversy are comprehended only if certain basic facts which govern incubation are understood. These have to do with the proper development of the embryo of the egg into a chick and, of course, depend upon the features of such development existing naturally in the egg. During the twenty-one days necessary for complete incubation, the problem requires consideration of the vital effects of temperature, moisture, and ventilation. Temperature is involved because development of the embryo requires a temperature of about 100 degrees Fahrenheit and this requirement continues during the entire incubation period. The maintenance of this desirable temperature is complicated by the fact that the temperature disposition of the egg changes during incubation. During approximately the first half of the incubation period the egg is receptive of heat from a surrounding temperature of 100

degrees while during the last half it is giving off heat under" (unto) "such surrounding temperature. This change is fairly regular and is progressive. Because of this change in the temperature characteristic of the egg at different stages of incubation, it is obvious that temperature control—that is, maintenance of all eggs at all times at about 100 degrees—presents a different problem depending on whether the eggs in the incubator are all at the same stage or are at different stages of incubation. Smith addressed himself to the situation where the eggs were in all stages of incubation. His problem, therefore, was to supply about 100 degrees of heat to all eggs in the first half of the incubation period stages and to remove from those in the later stages any excess over 100 degrees—to maintain all eggs at about 100 degrees.

Moisture was another element of the problem because while eggs constantly give off moisture, the chick will be below normal if this evaporation takes place unduly. In short, it must be controlled and kept normal. Ventilation is important because the incubating eggs give off enough carbon dioxide to be harmful if it is not released. Since Smith was concerned with eggs which were at all stages of incubation, these features of moisture and ventilation were constantly present. His entire problem was to maintain a temperature for all eggs of about 100 degrees with provisions for maintaining the proper moisture conditions and for sufficiently purifying the air of the carbon dioxide."

SECTION 1. THE TRUE MEANING OF CLAIM 1 AS DETERMINED FROM THE PATENT ITSELF.

Disclosure of the Smith patent No. 1,262,860 in suit.

The Circuit Court of Appeals for the Eighth Circuit in the instant case took a correct view of the Smith patent in suit and in its decision, 70 F. R. (2) 564, it held that claim 1 of the patent was not infringed by respondents. Judge Stone very carefully considered the disclosure of the patent, and, without going any further than the face of the patent itself, based said Court's entire decision on the ground that the disclosure necessarily limited claim 1 to such a narrow meaning that non-infringement was clearly established. It, therefore, is necessary that a correct understanding be had of what the Smith patent in suit discloses.

All of the statements made by Judge Stone in the decision of said Court are correct, but, in view of the petitioner's fallacious contention, to which attention was called in the last part of the last previous chapter, it is necessary to trace the disclosure more in detail, than was done by Judge Stone, in order to bring out the true operation of the machine when in use for hatching eggs, according to the method disclosed in said patent. We will, however, make the discussion as short as possible.

The said Smith patent purports to disclose an "improved apparatus and method" for hatching eggs in large quantities. The drawings illustrate and the specifications describe a machine which constitutes the apparatus referred to in the first sentence of the second paragraph of the specification. In substance, it is represented or implied that, in the operation of this machine or apparatus, the alleged improved method of hatching eggs is carried into effect.

(a) *As to the Structure of the Machine.*

Said Smith machine includes the hereinbelow named mechanical elements related as hereinbelow stated:

A large rectangular casing, or walled chamber 2, corresponding in size to an ordinary room. The interior of this casing is subdivided by two vertically disposed curtains 3 and 4 spaced apart from each other, and from the side walls of the casing, thereby dividing the casing into a central compartment or corridor 5 and two side compartments numbered, respectively, 6 and 7. Said casing 2 has a door 8 in its front vertical wall opening into the corridor 5. In each of said side compartments 6 and 7 are suitably mounted a plurality of vertical tiers of racks adapted to support mesh-bottomed trays (see Fig. 2), with the trays superimposed, one above the other, and slightly spaced apart from each other. The three racks nearest to the upper ends of said side compartments 6 and 7 and the three racks nearest to the bottom of said respective compartments 6 and 7, are stationary racks adapted to removably hold trays in horizontal positions. The racks disposed between the said two sets of stationary racks of each tier are called "tilting racks 10," and these are suspended by links 11 from overhead supports in such a way that the said racks, and the egg-containing trays carried thereby, can be tilted so as to make the trays take positions inclined to the horizontal plane. A portion of one of these tilting racks is illustrated in Fig. 4.

The central compartment or corridor 5 has, a short distance below its top, a cross partition or ceiling made up of trap doors 19 hinged to one of the upper side walls 22 of said corridor and adapted to be latched to the other side wall when in horizontal position; and which trap doors support a series of propelling fans 18 disposed with their axes in the

vertical plane and the blades of which fans extend downward through holes 20 provided in the said trap doors 19. The top wall of the casing 2 is double with the two plates thereof spaced apart from each other in a vertical plane. The lower plate of said top wall, the sections 22 of the corridor walls and the trap doors 19 define a space or chamber 21, above the said trap doors or ceiling of the corridor, in which are mounted coils of heating pipes 23 and above the lower plate of the top wall of the casing is located a valve-controlled steam supply pipe or jet 26 for moistening the air (see Fig. 3 and lines 34 to 43, page 2 of the specification). That portion of the lower plate of the top of the casing, which affords the top wall of said chamber 21, is provided with valve-controlled air inlet openings 24 immediately above the respective fans 18. There are two of these valved openings 24 illustrated in the drawings and they both communicate with the exterior atmosphere through a large open hole in the top wall of the casing (not numbered). Fresh air can thus reach the chamber 21. The top wall of the casing is also provided with used air outlets, shown as in the form of open-ended thimbles or pipes 28, the lower ends of which are in communication with the spaces above the tiers of trays within the side compartments 6 and 7, and which spaces are, in turn, in communication with the chamber 21 which contains the fans and the heating coils, hitherto noted. The used air replaced by the fresh air can thus get out of the machine. As shown, the air inlet openings 24 have an area equal to the conjoint area of the air outlets 28.

In lines 97 to 105, page 2 of the specification, it is stated that any suitable thermostatic means may be employed for regulating the temperature, and that this thermostat might be of the kind commonly used in incubators, such as is illus-

trated in the patent there identified, and it is further stated that the thermostat would be "suitably connected" to the valve controlling the steam or hot water, as the case may be, which passes through the pipes 23, obviously to supply heat when the temperature in the incubator falls below a certain point and to cut off the supply of heat when the temperature in the incubator rises above that point.

Having regard to the spaces 27 between adjacent pairs of the tilting racks 10, as shown in Fig. 3 of the drawings, they are *closed* at their lower ends by strips of flexible fabric, there marked 28 (although this was a duplication of that number), and, in lines 53 to 64, on page 2 of the specification, it is stated that these spaces 27 are thus closed at their lower ends so as to *compel* the air to circulate *through the mesh bottoms* of the trays and around and about each egg in the lower trays of the tilting racks.

By reference to the drawings, it will be seen that the two suspended curtains marked, respectively, 3 and 4, hang directly alongside and close to the inner ends of the trays and have such vertical dimensions that their lower ends or edges are located below the uppermost of the lower sets of stationary hatching trays.

Hence, the portion of said corridor 5 below the fans 18 is only in communication with the said side compartments 6 and 7 in the zone below the lower ends or edges of said curtains 3 and 4. No modification of structure is disclosed or suggested.

(b) *As to the Stated Mode of the Smith Machine's Operation.*

It is said that the "method of heating is such that the heated air is adapted to the eggs in various stages of incubation." It is also said, "There is a forced circulation of hot air through the chamber which is adapted preferably to maintain all eggs at temperatures between 100° and 105° Fahrenheit, approximately" (page 1, lines 13 to 19). It is also stated, page 1, lines 19 to 40 (Italics ours, in all quoted portions of this brief unless otherwise specifically stated):

> "* * * and *this improved system contemplates that fresh eggs will be placed in a horizontal plane,* preferably by means of trays supported in horizontal planes, *and after the eggs have been subject to the circulation of hot air for a predetermined time* (the air circulating largely around the eggs) *they will be placed in a tilted or inclined position in a different location* but still subject to the same *column of air* and at this period of incubation they will be tilted in different planes at regular intervals during the time they remain in this latter position, *and after they have remained for a predetermined time they will be again moved to a different position with reference to the forced circulation of hot air* and so placed therein that the air will tend to keep the eggs below 105° temperature, *and in this last named position the air will be forced to pass between the different eggs and will in effect act as a cooling medium for the eggs.*"

This means, of course, that the eggs, when they are first placed, in fresh condition, in the incubator, will be placed in a horizontal plane in trays supported in the upper horizontal groups of three stationary racks in the side compartments 6

and 7. Then after the eggs have been subject to the hot air circulation for a predetermined time, they are moved down to be received within the upper tray spaces of the tilting racks 10 in the side compartments 6 and 7. As the eggs progress in incubation they are moved down from upper tray spaces in the tilting racks to lower tray spaces and subjected to the same *columnar* circulation of air, whereupon they are eventually moved to the bottom tray spaces in the tilting racks, the fabric strips numbered 28 in Fig. 3 of the drawings closing the lower ends of the spaces 27 forcing the air to pass between the different eggs and act as a cooling medium for the eggs. It should be noted that the above quoted portion of the specification in parenthesis, line 25, page 1, makes it clear that when the eggs are held in the upper horizontal racks the air circulates largely around the eggs rather than through the egg trays and between the different eggs, while when the eggs are in the lower portions of the tilting racks, care is taken to cause the air to pass between the different eggs so as to act as a cooling medium for the eggs. In other words, the eggs in the early stages of incubation are given a different air treatment than the eggs in the most advanced stages of incubation and this is for the particular purpose of preventing the eggs in the more advanced stages from being burned up as will be brought out more clearly later in this brief.

Going on with the description in the patent, it is further stated, page 1, lines 40-54:

> "The temperature of circulating air should be such as will prevent the eggs in the early stage of incubation from falling below 100° and *the speed or velocity of the circulating air should be such as to carry the heat away from the eggs in the later stage of incubation* and there-

by hold the temperature of those eggs at 105° or slightly below that * * * but the air is impelled with sufficient velocity to carry the heat away from the eggs which happen to be in the advanced stage of incubation."

It should be here again noted that the patentee emphasizes the velocity of air circulation for carrying the heat away from the eggs in the later stage of incubation, but he does not emphasize velocity of the circulating air for raising the temperature of the eggs in the earlier stage of incubation. In other words, he makes it clear that by reason of the fact that the heated eggs in the advanced stage of incubation are placed together in the lower part of the tilting racks, the air must be circulated rapidly between these eggs to carry off the heat units.

Page 1, lines 87-104, read as follows:

"These trays are provided with open mesh bottoms 14 upon which the smaller ends of the eggs rest in close and solid formation, and each tray of eggs occupies the upper rack 9 for the first three days, and is then transferred to a place in the upper end of the tilting rack 10. *During the next fifteen days the trays in the tilting rack are shifted from higher to lower planes* therein and tilted at frequent intervals to stand in oppositely-inclined positions. The tilting of the eggs is preferably arranged to put the eggs substantially on their sides. When the eggs in the lower-most trays in the tilting racks 10 are about ready to hatch each tray is transferred to the stationary rack 12 where the chicks may be removed as occasion requires."

The patentee here describes the special form of stage incubation that he uses in his process. Nowhere in the patent is

there a description of any other type of stage incubation that could be used, nor is there described or suggested any other manner of handling the eggs in the incubator.

Lines 11 to 50, page 2 of the patent specification, read as follows:

> "The fans or series of fans 18 mounted upon the hinged trap doors 19 forming the ceiling of the central corridor 5 constitute the means for forcing the hot air through the chamber and there are circular openings 20 provided in said doors within which the fans are arranged properly. The longitudinal space 21 above the fans has open communication above the side walls 22 with the upper ends of the rack compartments behind the curtains 3 and 4 *and these curtains extend a sufficient distance,* as indicated in Fig. 1, *to cause the heated air distributed by the fans to pass downwardly through the central corridor to a point near the bottom of the chamber where it can pass into the space occupied by the trays.* As explained later *the trays near the bottom are preferably arranged so that the air is forced to pass between the eggs in each tray thereby cooling or holding the temperature of those eggs down.* Thence the air passes into spaces above the lower series of trays until it reaches the distributing space 21 above the fan. Coils of heating pipe 23 are arranged in the space 21 to heat the air and *more or less fresh air may be taken in through the valved opening 24 above the space 21* and *this fresh supply of air may be charged with steam* to a greater or less degree by means of a valve controlled jet or pipe 26, see Fig. 3. The outlets 28 for the release of *foul air* are made of such restricted capacity as to prevent the undue escape of moisture. It is possible to

limit the openings and so conserve the moisture *by reason of the vitalizing effect of the power driven current* upon the body of the air within the chamber."

In this same section of the specification of the patent, it is made clear that the curtains are used to cause the air to be carried downwardly to such a point that the air will be first carried to the hot eggs in the lowermost portions of the tilting racks, so as to cause the air to be forced between the eggs in these trays to cool the eggs. In other words, one purpose of the curtains is to prevent the air circulated by the fans from moving freely into the spaces occupied by the upper or cooler eggs until this air has first passed to the hot eggs in the lowermost trays of the tilting racks to cool the eggs in those trays. Attention is also called to the fact that the air so circulated is vitalized by fresh air and moisture in the space 21 just before it enters the fans and is driven downwardly by the fans through the corridor between the curtains. By reason of the confining action of the curtains, the vitalized air is made to pass first to the eggs in the later stage of incubation, *i. e.*, the eggs in the lower parts of the tilting racks, before that vitalized air is allowed to pass to the eggs in the earlier stage, *i. e.*, the cooler eggs in the upper portions of the tilting racks.

Page 2, lines 56-78 of the patent specification, read as follows:

"* * * and it will be also noted that the vertical spaces 27 between the adjacent tilting racks 10 are closed at their lower ends by flexible strips of fabric which are attached to and extend upward at each side of each rack so as to compel the air to circulate through the mesh bottom and *around and about* each egg as heretofore referred to, and as the eggs further advanced in

incubation are contained in these lower trays and as the danger is that the temperature will rise in these eggs to a point injurious to incubation *the improved method disclosed herein* permits the circulating air to act as a medium to prevent the overheating at this stage of incubation and *this is accomplished by promoting an induced draft within the lower trays.* It is obvious that the fans can be so arranged and can be operated at such speed as to cause the hot air to circulate fast enough to keep the temperature throughout the chamber between the limits of 100° and 105°."

Here it will be noted the inventor defines his improved method as one wherein an induced draft is promoted within the lower trays, *i. e.*, the trays containing the heated eggs in the later stage of incubation. It will be also noted that the patentee specifies the fabric strips closing the spaces at the lower ends of the tilting racks, as being used to compel the circulation around and about each egg in the lower trays. It should be further noted that there is no statement made that by speeding up the fans the desired circulation can be obtained *without the use of curtains.*

Having described in detail the mode of operation of his machine, and the method of hatching eggs carried into effect thereby, the patentee in the paragraph of the patent beginning line 79 and ending in line 96, of page 2, defines in definite terms what his improved method is. This paragraph reads as follows, and it is the key to the meaning of the relied on claim 1 of the patent:

"It, therefore, appears that the improved apparatus and *method contemplates* the application of *hot air circulating in a column* with such speed as to keep the temperature substantially uniform and *so arranging the*

eggs that the fresh eggs *are placed at one point in the column of air and held in a horizontal plane until they reach a predetermined stage of incubation* and *then put at a different point in the same column* of air and kept in planes inclined to the horizontal and *thereafter placed at such a point in the column of air that the forced draft* of air *acts to hold the eggs at a uniform temperature* and to prevent them from becoming overheated and thereafter placing the eggs into final position for the hatching operation."

To What the Disclosed Process of Hatching Eggs is Confined.

So far, with few words of comment, we have allowed the drawings and the descriptive portion of the specification to speak for themselves. The limitations on the method of incubation disclosed in the patent may now be understood.

The Disclosure of the Patent is Limited to a Special Type of Stage Incubation.

Obviously the eggs are so set and handled that a special type of stage incubation is present. It is true that the eggs are set at different times and hatched at different times, which is the definition of stage incubation from the broad point of view. It is also true that eggs of different ages are placed in the same chamber so that heat from the hotter eggs assists in heating the cooler eggs. But the patent disclosure is not broad enough to cover any type of stage incubation where eggs at different ages are placed in the same chamber for hatching as contended for by petitioner. The patent states that when the eggs are first set, they are placed in trays in horizontal planes in the upper stationary hori-

zontal racks. After the newly set eggs have been subjected to the column of air circulating around the same for some time, they are shifted downwardly to the upper tray spaces in the tilting racks and as incubation progresses, the trays of eggs are successively shifted downwardly, from time to time, in the tilting racks, from upper to lower levels until, toward the end of the hatching period the eggs in the most advanced stage of incubation are located in the lower tray spaces of the tilting racks. As the eggs take on heat from the air, during approximately the first half of the incubation period, and as they give off heat to the air, during approximately the latter half of the incubation period, the cooler eggs, that is the eggs in the earlier stages, taking on heat, are always grouped or massed together in the upper stationary racks and in the upper portions of the tilting racks; whereas the eggs in the later stages, giving off heat, are always grouped or massed together in the lower tray spaces of the tilting racks with the very hottest eggs, *i. e.*, the eggs in the most advanced stage of incubation at the bottom. When the eggs have been in the incubator for eighteen days, they are moved from the tilting racks to the stationary hatching racks in the bottom of the incubator where the chicks break their shells.

The stage incubation above just described, is the only type of stage incubation disclosed in the Smith patent. Repeated references in the description are made to this particular type of stage incubation and no reference is made to any other type.

The Claim Does Not Call for Stage Incubation Except by Inference.

The first portion of claim 1 of the patent reads as follows:

> "The method of hatching a plurality of eggs *by arranging them at different levels* in a closed chamber * * *."

Mere arrangement of eggs at different levels in a closed chamber is not stage incubation. The claim does not specify in so many words that the eggs at different stages of incubation are arranged at different levels.

There is nothing further in the claim to show or imply that stage incubation is one of the essential elements called for until the "whereby" clause is reached at the end of the claim. This "whereby" clause reads as follows:

> "* * * whereby the air will be vitalized, the moisture conserved and *the units of heat will be carried from the eggs in the more advanced stage of incubation to those in a less advanced stage for the purpose specified.*"

This "whereby" clause in the claim presupposes that the eggs are set in stage incubation and when it is interpreted with the first portion of the claim above quoted, it can only mean that the eggs in the more advanced stage are at one level and the eggs in the less advanced stage at another level, the arrangement of the advanced stage eggs and the less advanced stage eggs being such that the air will circulate first to the eggs in the advanced stage and then to those in the less advanced stage. In other words, *the claim does not call for stage incubation in so many words, but it implies stage incubation and it refers back to the descriptive portion of the specification to obtain the meaning of the stage incubation implied.* As only one type of stage incubation is dis-

closed in the patent, namely the type where the eggs are set from day to day in the upper portions of the egg racks and shifted successively downwardly as incubation progresses so as to group the eggs in the earlier stages together and to group the eggs in the later stages together in order to carry the air from the eggs in the later stages to the eggs in the early stages, it is clear that the stage incubation of the claim must be the stage incubation defined and disclosed in the patent and that only. The claim is therefore limited to a special type of stage incubation wherein the eggs are shifted from one position to another successively as the incubation of the egg progresses. The claim is further limited to a special type of stage incubation wherein the eggs in the earlier stages are grouped together in the upper part of a chamber and the eggs in the later stages of incubation are grouped together in the lower part of the same chamber. That is the only way in which the whereby clause of the claim can be realized.

The Patent Discloses that the Air is Never Recirculated in Closed Cycles—No Air is Ever Recirculated in the Same Condition True Circulation Stated.

Petitioner's brief writers have set up the fallacious contention that the relied on claim 1 of the patent is not limited in respect to the movement of air first to the eggs in the more advanced stage of incubation and then to those in the less advanced stage. In an attempt to establish this contention, they have advanced the theory that the Smith patent discloses that the air passes over and over the eggs in closed cycles, necessarily implying that there is no beginning or end of the air circuit and that the air after making one circuit is thereafter always recirculated in the same condition.

This is a fallacy that is self-evident from the patent itself.

By reference to Fig. 3 of the drawings of the Smith patent, it will be seen that the valve controlled steam inlet pipe 26 delivers the steam into the space between the upper and lower plates of the double walled top of the casing, and by reference to Fig. 1 of the drawings, it will be seen that the upper or outer member of said two walls has a large fresh air intake opening, through which the fresh air sucked in by the fans, gets into the said space between the two plates of the top of the casing. This incoming fresh air is, therefore, moistened by the steam from the jet 26, before it reaches the inlet openings 24 and enters the chamber 21.

Now let it be assumed that the eggs have been set in the machine disclosed in the Smith patent and that the machine is in action. Then, the gist of the machine's mode of operation can be briefly stated as follows:

All of the incoming fresh air is moistened by steam from the steam jet 26 within the space between the two walls of the double walled top of the casing and thereafter, if the thermostat calls for heat, said air is heated by the steam coils 23 when it gets into the chamber 21 above the ceiling of the corridor 5. The incoming fresh, moistened and sometimes heated air will be joined in the chamber 21 by such portion of the used air as is drawn by the fans from between the side walls or beams 22 and the lower plate of the double walled top 25 of the casing, or in other words, by that part of the used air drawn from the upper parts of the compartments 6 and 7 by the fans,—after part of the used air in these compartments has exhausted to the atmosphere through the outlets 28. The used air so drawn from above the egg trays into the chamber 21 will be commingled with the fresh, moistened air admitted to this same chamber

through the inlet openings 24 and this fresh, moistened air *will vitalize* the used air with oxygen and moisture, so that *all the air forced downwardly by the fans is vitalized air*. In view of the size of the air inlet openings 24 as compared to the passages between the walls 22 and the lower plate 25 of the double walled top of the machine and also in view of the fact that the fans 18 are respectively located immediately below the two fresh air inlet openings 24 and run at high speed, the proportion of fresh air, drawn in, moistened and mixed with the used air in the chamber 21 must necessarily be large.

At the trial of the case, the respondents introduced into evidence as "Defendants' Exhibit H" a commercial specimen of the Smith incubator, made by the Smith Incubator Co., sold by that Company to respondents, and owned by respondents. It was not denied by petitioner that this machine "Exhibit H" commercially embodied the invention of the patent. This machine "Exhibit H" was tested by respondents' expert, Prof. Rowley, in *inter partes* tests prior to the trial and in explaining his tests made on that machine, Prof. Rowley (R. 195) testified that the said machine had a central fresh air inlet opening of 10 inches in diameter and that the velocity of air movement through the said opening was 412 feet per minute. The correctness of this statement was not challenged. This opening was unrestricted by valves or dampers in the commercial machine. By simple mathematical computation therefore (multiplying the area of the fresh air opening, $\frac{\pi D^2}{4}$ or $\frac{3.1416 \ (10)^2}{4}$, by the velocity of air travel in inches per minute, 412 times 12), it is found that fresh air was introduced into that commercial "Smith machine Exhibit H" to the extent of *388,302*

cubic inches of fresh air per minute. By actual measurement of respondents' specimen of the Smith machine, "Exhibit H" introduced into evidence, it is found that the interior dimensions of the machine are approximately 12 feet 6 inches long by 9 feet 6 inches wide by 7 feet 6 inches high. By simple mathematical computation therefore (transposing the figures to inches and multiplying them together), the cubic content of that machine "Exhibit H," without considering the large space taken up by eggs, egg trays, racks and other equipment within the machine is 1,539,000 cubic inches. By comparison of the amount of fresh air admitted to the machine per minute with the cubic content of the machine, it is found that *there is admitted* to the machine *during each minute* of its operation a quantity of *fresh air equal* approximately to *one-fourth the internal volume of the entire incubator.* If the space occupied by eggs, egg trays, racks, fans and other equipment in the machine is deducted from the internal volume of the machine in cubic inches, to secure a fair comparison, it will, of course, be found that the ratio of fresh air admitted per minute to the total space occupied by air in the machine is much higher. It is, therefore, *conclusively proved that the quantity of fresh air admitted in the commercial Smith machine is large.*

Petitioner's brief writers on page 8 of petitioner's brief, made the following statement:

> "In the operation of the Smith commercial machines, this interchange of foul and fresh air is only *one-half of one per cent* of the total volume of air in circulation (Vol. I, p. 68)."

Elsewhere in petitioner's brief, statements are made to the effect that the air interchange in both the Smith machine and respondents' machine is only one-half of one per cent.

This is an incorrect statement of the evidence in the case. On page 68 of the record, petitioner's expert, Mr. Taggart, when testifying about the Smith patent and the Smith commercial machine, gave the following answers to the following questions:

> "Q. What is the percentage, actual percentage of total air in the circuit which passes, which is interchanged from outside to inside?
>
> A. I didn't explain the openings for the intake of fresh air and discharge of foul air. Above each side, as shown here, there is a restricted opening for the intake of a certain amount of fresh air, and above each egg column there is shown an opening 28, with a discharge of foul air.
>
> The Court: Will enough air reach in there so that the foul air will escape in preference to the other air?
>
> The Witness: No, sir, *there is an interchange of from one to three per cent of air in actual operation every time.* In machines of our own manufacture that we are putting on the market at the present time we hold that exchange of air down to one-half of one per cent. We have never put machines out that have over about *three per cent.*"

In other words, Taggart himself admitted that the interchange of air was from one to three per cent. He failed to specify, however, the time period in which this interchange took place. His statement is therefore meaningless. As proved above, the air interchange in one of the Smith commercial machines that respondents owned was over twenty-five per cent per minute.

The quantity of fresh air admitted into the machine of the Smith patent and moistened before reaching the fans, is im-

portant for the reason that this air is relied upon to vitalize all the air in the machine driven down into the corridor by the fans. The cycle of air movement is begun in the chamber 21 above the ceiling of the corridor 5 of the patented structure where the fresh moistened air is mixed with the used air to be circulated.

Referring back again to the mode of operation of the machine of the patent, the propelling fans 18 deliver the vitalized body of air to the corridor 5 in conical columns or streams with the smalier ends of the said conical columns at the upper ends thereof directly below the blades of the fans, and inasmuch as those fans run at approximately 1,750 revolutions per minute, those columns of air will be made to travel downwardly at high speed and under considerable pressure. The curtains 3 and 4 define a restricted space, and the only space through which these columns of air can travel downwardly in said corridor, under the propelling action of the fans, and hence, said columns of air must travel clear down to the zone of the corridor which is below the lower edges of said curtains, whereupon said columns of air will strike the floor of the corridor and be thereby deflected laterally into the lower ends of the side compartments 6 and 7 beneath the lowermost trays holding the incubating eggs, and will then pass on upward in columnar form through the mesh bottoms of the tiers of superimposed egg containing trays and into the spaces above said tiers of trays and below the lower plate of the top wall of the casing. From those spaces directly above the said tiers of trays, a considerable quantity of the used air (called "foul" in the specification) will be discharged to the atmosphere through the outlets 28 in the top of the casing, and the remainder of the used air will move onward into the chamber 21 to complete the cycle

of air movement. Each time fresh air meets and commingles with used air a new cycle of air movement begins, for the reason that the used air moving into the chamber 21 above the fans is never recirculated into the corridor, and thence, to the eggs *in the same condition* that it is in when it is drawn into the chamber 21 after having passed through the eggs in the egg trays. It is revitalized by moist, fresh air in the chamber 21 above the eyes of the fans and when the thermostat calls for heat it is also heated in this chamber by the heating coils 23 before being passed onto the corridor and then to the eggs in the egg trays. The air action in the machine is continuous, but *the same air is never recirculated in continuous cycles in the same condition.* On the contrary, some of the used or so-called "foul" air is discharged and carries out with it enough of the carbon dioxide emitted by the eggs to prevent injurious accumulation of this carbon dioxide, and a corresponding amount of moistened fresh air is drawn in and commingled with the portion being re-used and this serves to vitalize the whole composite body of air which is propelled into the corridor 5 by the fans 18.

Now, if the manner of setting and handling the eggs in stage incubation in the Smith patent is recalled, to-wit: That the fresh eggs are first placed in horizontal planes in the upper horizontal stationary racks and then that these eggs are next shifted to the uppermost tray spaces of the tilting racks and thereafter shifted step by step downward until they reach the lowermost tray spaces of the tilting racks, so that the eggs in the most advanced stage of incubation are at the lowest level and those in the earlier stages of incubation are at higher levels, then it is perfectly clear, from the machine's mode of operation above described, *i. e.*, the hatching method, that the vitalized air always first

strikes the eggs in the most advance stage of incubation and then strikes the eggs in the earlier stages of incubation thereby carrying off the heat from the eggs in the advanced stages and delivering some of this heat to the eggs in the earlier stages as stated in the Smith patent and as held to be essential to the hatching method defined in claim 1 of the patent by the Circuit Court of Appeals in the present case.

When it is understood that the heated eggs in the advanced stages of incubation are grouped or massed together in the lower portions of the tilting racks, and that it is these eggs that are giving off the greatest quantities of carbon dioxide and that it is, therefore, to these same eggs that the greatest quantities of fresh air and moisture must be supplied to prevent the embryo chicks from dying therein and that it is these same eggs "between which" air must be rapidly circulated to keep them in cool condition, then it is clear why it is essential that the air vitalized by the moist, fresh air admitted through the inlet openings above the eyes of the fans must be circulated first to the eggs in the most advanced stage of incubation and then to the eggs in the less advanced stage. It is also clear why the patentee stressed this particular type of air circulation of the vitalized air first to the eggs in the advanced stage of incubation and then to those in the less advanced stage in the specification of his patent and made it clear that he contemplated no other type of air circulation. The thermostat is automatically cut out so that no heat is supplied to the heating coils during the major part of the time that the incubator is in full operation. Also, the fresh air supplied through the air inlet openings is normally at a temperature considerably below 99° to 100°, the temperature at which the incubator is maintained. From these facts, it will be appre-

ciated that the fresh air which acts with the moisture to vitalize the air circulated, also acts to cool that portion of the air moving first to the eggs in the advanced stages to thereby assist in carrying off the heat units therefrom. In other words, this cooling effect produced by the fresh air admitted makes it still more positive that the air must be circulated first to the eggs in the most advanced stage and then to those in the less advanced stage if the disclosed process of hatching is to be carried out.

To be sure that the vitalized air will strike the eggs in the most advanced stage first, and carry off the heat therefrom, and supply these eggs with the requisite moisture and fresh air for successful hatching, the patentee uses his curtains 3 and 4 so as to prevent the vitalized air from moving from the corridor to the eggs in the less advanced stages before the air first struck the eggs in the most advanced stage. He also uses these curtains to assure a high velocity of air travel about and between the eggs in the most advanced stages. From the corridor where the air travels at the greatest speed, the air is caused by the curtains to move into and between the lowest eggs in the egg tiers whereupon the velocity of air travel, after the eggs in the most advanced stages are struck, is naturally reduced by the obstructions in its path. This is shown in the test data of the plaintiff's commercial machine prepared by plaintiff's expert witness, Mr. Taggart, in "Plaintiff's Exhibits 7, 7a and 7b" (R. 449 to 453) wherein anemometer readings, showing the speed of air movement, indicate that the speed of air travel to the lowermost egg trays is much greater than the speed of air travel through the uppermost egg trays. Without this extra velocity in the lowermost egg trays, and without the supply of fresh, moistened air, *i. e.,* vital-

ized air, to the eggs therein, these eggs would burn up and kill the embryo chicks therein. The curtains or corresponding partitions are accordingly, therefore, essential to the Smith hatching method to assure the movement of the vitalized air first to the eggs in the most advanced stage of incubation and then to the eggs in the less advanced stage of incubation.

Judge Stone states in the Circuit Court of Appeals decision in this case, after quoting from the patent and discussing the method disclosed therein 70 F. R. (2) 567, as follows (Italics ours):

> "From the above description it is evident that the disclosure was of a method embodying two coacting elements: A column of eggs in trays wherein the trays would be *progressively located in three different locations* beginning with the fresh eggs, then in a second location and finally in a last location; the circulation, through or around the eggs in the column, of temperature controlled heated air (with moisture and ventilation provision) in such manner as to carry off the surplus heat units from the advanced eggs to those less advanced."

Judge Stone then goes on to discuss the three claims of the patent, distinguishes claim 3 from claim 2, holds that claim 2 cannot be infringed by the Snow process and then states that whether or not claim 1 is infringed depends on whether the claim must be given a broad scope as contended for by appellee there (petitioner here) or whether the claim must be given only a narrow scope as urged by appellants there (respondents here).

Then Judge Stone goes on to show, by numerous quotations from the patent, that the patent discloses only a par-

ticular arrangement of the eggs in stage incubation including the shifting of the eggs successively downwardly from one position to another, and that the patent discloses only a movement of the air in columns through the egg trays and that the patent discloses only a movement of the air first to the eggs in the advanced stage of incubation and then to the eggs in the less advanced stage of incubation. He then summarizes on page 568 of the reported decision, his conclusions as to the meaning of claim 1, as follows (Italics ours):

> "From the above, it would seem that the arrangement, location, and change of location of the eggs at various stages of incubation was an essential feature of the disclosure. Nowhere is there a suggestion that the patentee has discovered that the desired results can be reached without or by some other arrangement, location or changes. Having disclosed this as an essential of his method with no hint, revelation, or teaching to the contrary the broad claim to arrangement of the eggs 'at different levels' cannot be extended to an arrangement of trays in a tier which alternates fresh and advanced eggs and where a tray is never moved from its position during the entire incubation period. The disclosure is limited to positions, in the egg column, of eggs in different 'stages' of incubation and the change or shift of such positions—the eggs in the 'early' stage of incubation are in one position where they remain a 'predetermined time' when they are shifted to another place in the column; from this second position, they are (after remaining a 'predetermined time') again shifted to a third position in the column.
>
> The arrangement of the air currents ('columns') is repeatedly stated to be such as to carry the heat given

off from the advanced eggs to those less advanced. When this is considered in connection with the above arrangement of eggs at various stages of incubation, it is difficult to see how the desired results can be secured except by a current of air passing first through the trays containing the most advanced eggs. That is the way appellee has devised his apparatus; it is the only way revealed by the patent or in practice; and it is successful.

Claim 1 (and, also, claim 2) must be so limited to preserve either of them. So limited, the question of infringement remains."

Then later, when discussing the infringement question, Judge Stone (p. 568) makes a further statement reading as follows:

"The conception and operation of appellee's device is a column of air passing through the column of eggs in a definite direction—from eggs in advanced stages to those less advanced."

In his conclusion, on the infringement question, Judge Stone states, page 568:

"Thus differing in both essentials of the patent—arrangement of eggs and air current—from the device disclosed by the patent, appellants' device is not infringing."

From the above it will be seen that the Circuit Court of Appeals for the Eighth Circuit, in the instant case, correctly held claim 1 of the patent limited to cover only a hatching method wherein eggs at different stages of incubation were held within a chamber and shifted successively from time to time as incubation progressed so as to group the eggs in the advanced stages and to group the eggs in the less advanced

stages and wherein there was a current movement of air to carry a column of air through a column of eggs in a definite direction from eggs in the advanced stages to those less advanced.

NOTE AS TO THE SMITH COMMERCIAL MACHINE:

The Smith commercial machine departs somewhat from the machine described in the Smith patent. In the commercial machine the double walled top of the machine described in the patent is done away with and the air moistening device is located directly in the compartment over the fans. Resulting difference in the action is that the fresh air admitted through the intake openings moves into this same chamber above the fans before it is moistened, and it is then moistened coincidently with the remoistening of that portion of the used air moving from above the egg trays and in that chamber commingled with the fresh air. This makes no difference as to the cycle or circuit of air movement, inasmuch as before any air is recirculated by the fan it is revitalized by quantities of fresh air and moisture, so that the air first striking the eggs in the advanced stages of incubation is vitalized air.

Also in the Smith commercial machine the upper stationary egg racks are done away with and the capacity of the tilting racks is correspondingly increased. The fabric strips closing the spaces between the lower ends of the tilting racks in the machine described in the patent are done away with, but the curtains are shortened in the commercial machine to a point just above the lower stationary hatching racks so that the velocity of air movement about and between the eggs in the most advanced stage of incubation remains about the same as in the machine described in the patent.

Authorities as to Interpretation of Patent Claims From the Specification of the Patent.

In resorting to the specification to determine the meaning of the terms used in the relied on claim 1 of the Smith patent here in suit, the Circuit Court of Appeals in this case did exactly what the long well settled law of the subject not only authorizes but required it to do.

Seymour vs. Osborne, 11 Wallace 516-547.

In this case, the Supreme Court, among other things, made the following statement, to-wit:

"Where the claim immediately follows the description of the invention, it may be construed in connection with the explanations contained in the specifications and where it contains words referring back to the specifications it cannot possibly be construed in any other way."

It should be noted that claim 1 of the Smith patent in suit terminates in the expression—*"for the purpose specified,"* thereby referring the claim back to the specification to be construed.

Mitchell vs. Tighlman, 19 Wallace 287.

This case involved the Tighlman patent 107,666 of Oct. 3, 1884, for a process, defined in the claim in the following words, to-wit:

"The manufacturing of fat acids and glycerine from fatty bodies by the action of water at a high temperature and pressure."

And the Court held that claim must be interpreted by reference to the specification, and construed the same to be so limited as to mean

"A process for decomposing fats and converting them into oleate margerate and stearate and a solution of glycerine by, among other measures, mixing the fat thoroughly with one-half or one-third as much water by means of a perforated piston forced through the mixture back and forth and by subjecting it for ten minutes to the temperature of from 510° to 600° Fahrenheit in a closed vessel capable of resisting the consequent pressure of 2,000 pounds and which is filled by the mixture and to which nothing else is admitted."

Westinghouse vs. Boyden Power Brake Co., 170 U. S. 537, 557-558.

In this case the Supreme Court applied the doctrine of *Seymour vs. Osborne.*

Expanded Metal Co., et al., vs. Board of Education of City of St. Louis, et al., C. C. A. 8th, Oct. 7, 1901, 111 F. R. 395.

This case was for the alleged infringement of the Golding patent No. 297,382, of April 22, 1884, for "Metallic Screening," and the Circuit Court of Appeals for the Eighth Circuit, in a decision written by the elder Sanborn, a high authority on patent law, affirmed the trial court in the dismissal of the bill of complaint for anticipation and non-infringement.

The claim of the patent read as follows, to-wit:

"As an article of manufacture, metallic screening formed of slashed and stretched metal, substantially as hereinbefore set forth."

In its said decision, the said C. C. A., among other things, made the following statements:

"The claim of the patent is expressly limited to a metallic screening formed of slashed and stretched metal, substantially as set forth in the specification. General language in a claim which points to an element or device *more fully described in the specification is limited to such an element or device as is there described,* and this claim *is limited to a screening slashed and stretched, substantially as set forth in the specification. Smith vs. Vulcanite Co.,* 93 U. S. 486, 493; *Adams Electric R. Co. vs. Lindell R. Co.,* 77 Fed. 432, 449, 23 C. C. A. 223, 240; and *Mitchell vs. Tighlman,* 19 Wallace 287, *supra.* The defendants manufactured a metallic screening without slashing and stretching it, substantially as set forth in the specification of appellant's pat-

ent and consequently they did not infringe the latter's monopoly."

O. H. Jewell Filter Co. vs. Jackson, C. C. A. 8th, Aug. 26, 1905, 140 F. R. 340. (Decision written by the elder Sanborn.)

This is a leading case on the subject here under consideration and contains a collection of authorities. The status of fact, however, is too complex for a brief statement. The following few remarks, however, will be sufficient to make clear the point of the decision.

The Jewell and Jewell patent No. 509,126, for improvements in apparatus for agitating the sand or filtering materials in a gravity filter was the one sued upon, and the relied upon claim called for a number of elements including

> "a finger bar pivotally mounted or attached to a carrying arm upon the agitator shaft (having certain special features set forth in the claim) adapted for stirring and loosening up the filter material * * * substantially as and for the purpose specified."

The said Court pointed out that the said expression "carrying arm," as used in that claim, must be interpreted in accordance with the description thereof given in the specification of the patent, and that, when so limited, the claim was differentiated from the defendant's machine.

Haggerty, et al., vs. Rawlings Mfg. Co., C. C. A. 8th, Sept. 25, 1926, 14 F. R. (2) 928-930.

In this case, the patent under consideration was for an athlete's guard, and the word "guard," as used in the relied upon claims, was, by reference to the specification, limited to the specific form of guard disclosed in the specification proper and illustrated in the drawings; and, after citing the

Supreme Court's decision in *McClain vs. Ortmayer,* 141 U. S. 419, and the *Jewell Filter Co. vs. Jackson, supra,* and others, said Court of Appeals affirmed the trial court in the dismissal of the bill of complaint, for non-infringement.

Rawson and Evans Co., et al., vs. Atlas Glass and Mirror Co., D. C. N. D., Ill., July 1, 1930, 42 F. R. (2) 241.

This is an extremely pertinent case. The status of fact was very similar to the status of fact in the case here at bar.

The suit was for the alleged infringement of the Andres patent, No. 1,281,262, of October 15, 1918, for improvement in *processes* of coating glass with precious metal; and a general term used in the relied upon claims was limited by reference to the specification and the bill dismissed for non-infringement. That general term was expressed in a clause which in the first claim of the patent read as follows:

"* * * a solution containing chloride of gold, potassium, carbonate and sugar diluted, as a substance effective to control or regulate the chemical reaction."

In the body of the decision, the Court identified some of the leading authorities on the interpretation of claims authorizing reference to the specifications, and then made the following statement:

"It is obvious therefore that the language of the claims 'a solution containing chloride of gold, potassium carbonate and sugar' can be read only in the light of the description and specification of Andres, wherein he specifically defines the diluted solution which plaintiffs now claim to be the basis of his invention. Thus to construe the language of the claims in the light of the specifications *defines* for us the gilding solution of Andres and *distinguishes it* from that of Pratt who speaks

of a diluted solution of chloride or gold, *caustic soda and glycerine.*"

Many more decisions from the U. S. Supreme Court and Circuit Courts of Appeal could be cited to the same effect, but the cases above identified are deemed abundantly sufficient.

SECTION 2. THE TRUE MEANING OF CLAIM 1 OF THE PATENT AS DETERMINED FROM THE PRIOR ART.

It follows inevitably, from a consideration of the prior art, that claim 1 of the Smith patent 1,262,860 must be given the same meaning as accorded thereto by the Circuit Court of Appeals for the Eighth Circuit in the instant case.

The Patentee Smith's Prior Public Usage.

The patentee, Samuel B. Smith, publicly and commercially used at Cleveland, Ohio, during the hatching seasons of 1913 and 1914 at dates more than two years before he filed his application for patent here in suit (October 26, 1916), an incubator of almost identical structure with that disclosed in his patent with the exception that the said prior use machine did not use the confining curtains of the patented machine and in the use of the said prior use machine it does not appear that the same specific type of stage incubation was used.

The proofs relating to this prior use machine, include said Smith's own testimony appearing (R. 134-139) and the two newspaper articles, stipulated photostats of which are in evidence, respectively, as "Defendants' Exhibit A" and "Defendants' Exhibit B." "Defendants' Exhibit A" is a photostat of page 5 of the Cleveland, Ohio, "Plain Dealer," issue

of Feb. 23, 1913 (R. 529-530), and the article is entitled "Mammoth Incubator Will Turn Out 20,000 Chicks Per Week." "Defendants' Exhibit B" is a photostat of page 5 of the Cleveland "Leader," issue of February 22, 1914 (R. 532), and the article is entitled "Cleveland Boasts Largest Hatchery."

Samuel B. Smith, at the trial of the case, was called as a hostile witness and cross examined as such. He testified (R. 134) that he built an incubator at Attica, Ohio, in 1912, and moved it to Cleveland, Ohio, and there commercially and publicly used it for hatching eggs throughout the years 1913 and 1914, that the chicks hatched were sold by him (R. 135) and that the percentage of hatch from that machine was from 40 to 45% (R. 138) of the eggs set. He described the machine (R. 134-135 and 137) as consisting of three large compartments or rooms about 9½ feet wide, about 12 feet long and about 10 feet high. He stated that there was one fan in the center of the ceiling of each compartment and that there was a corridor in each compartment with eight tiers of egg trays, fourteen trays high, at each side of the central corridor. The egg trays were so mounted on carriers that the carriers could be turned to turn the eggs. Heating pipes (R. 134) were on the floors of the compartment below the fans. The fans were driven at a speed of 1,750 revolutions per minute (R. 135) and the temperature of the air was kept at about 100° under thermostatic control (R. 135). There were no curtains in the corridor of this machine segregating the corridor from the egg trays (R. 136). He further stated that although each compartment of the incubator was filled with the same age eggs, the three different compartments were loaded with eggs at three different times succeeding each other in regular order. In other words, he stated that one compartment was first filled with eggs and, after

an interval of several days, another of the three compartments was filled with eggs and at a later date the third compartment was filled with eggs. As a result, the eggs in the different compartments hatched at different times. Although Dr. Smith denied that he used stage incubation in this machine and it is clear that he did not use the special type of stage incubation disclosed in his patent, it is equally clear that he had stage incubation of one form in that prior use machine. The eggs were set in stages in the different compartments of the machine and they were hatched in stages from the different compartments of the machine.

Mr. Smith stated (R. 135):

> "The air was driven down to the floor by the fan and came up around the eggs and led in between the columns of eggs. A small amount might go through the trays but a majority of it went up around between the columns."

From this statement, it is very clear that in that prior use machine the fan in the center of the ceiling of each compartment forced the air downwardly through the central corridor of the machine to the floor where the air took on heat from the heating pipes and then the air moved through and around the egg trays and circulated back to the fan. In other words, it is clear that except as modified by presence of the curtains in the machine of the patent and the interchange of fresh air for used air, the air circulation in the patented process is practically identical with the air circulation in the prior use machine. Of course, in the prior use machine the air was not made to circulate first to the eggs in the advanced stage of incubation and then to the eggs in the less advanced stage, both because curtains were not used and because the eggs in each compartment were all of the

same age and were not shifted and grouped with the cool eggs, *i. e.,* the eggs in the less advanced stage at the top of the egg tiers and the hot eggs, the eggs in the most advanced stage at the bottom of the egg tiers. However, the heat generated by the hatching eggs could not but have helped to supply the necessary heat to all the eggs, inasmuch as air was moved by the fans around and about all the eggs in each compartment. The trays of the eggs in the respective tiers in each compartment were spaced apart from each other in a vertical plane, and these spaces were open to the corridor. Of necessity, it follows that the heat generated by the hatching eggs got into the moving body of air and distributed heat to it.

That the said usage was a public and commercial usage was admitted by Dr. Smith (R. 135) in his answers to the following questions, to-wit:

"Q. How long did you commercially use that machine at Cleveland, Ohio, in that form that you have described?

A. Two years.

Q. Two years?

A. Yes.

Q. And you sold the hatches did you not?

A. Yes, sir.

Q. So that was for commercial use, was it not?

A. Yes, sir."

Then again on R. 137 Dr. Smith when testifying about the same machine, gave the following answers to the following questions, to-wit:

"Q. And did you succeed in hatching eggs?

A. Yes, sir.

Q. This machine as you then used it—I mean the one that you brought from Attica, and as you used it

there at Cleveland, Ohio, in 1913 and 1914, was open to the inspection of the public, was it not?

A. Yes, sir.

Q. You did invite people to come there?

A. Yes, sir.

Q. And, to your knowledge, were more or less newspaper articles, describing that machine, published in the daily papers of Cleveland, or some articles?

A. Yes, there were articles published."

Then the witness went on to identify the two newspaper articles, "Defendants' Exhibits A and B," and he stated that those articles referred to his machine that he used in Cleveland in 1913 and 1914 (R. 139). He stated that the articles in the newspapers were based on information that he no doubt had given the reporters. The said newspaper articles, "Defendants' Exhibits A and B," furnish a description of the machine that Dr. Smith used publicly and commercially at Cleveland, Ohio, for more than two years before he applied for his patent in suit (R. 529-532).

From a consideration of the above described old prior use Smith machine and its operation, it is obvious that there was in public use, more than two years before the filing of the application maturing into the patent in suit, an incubator wherein fans were used for forcing air to circulate through and about eggs in a multiplicity of tiered trays and wherein, at least part of the air once circulated was caused to recirculate again to the eggs. It is equally clear that in that prior use machine, Smith used a type of stage incubation although not the special type of stage incubation disclosed in his patent. It is, therefore, clear that Smith's own prior public use of his incubator at Cleveland, Ohio, during the years 1913 and 1914, preclude him from a valid interpreta-

tion of claim 1 of his patent which would make it cover the broad combination of forced draft and stage incubation.

Controlling Law as to Prior Public Use.

There can be no question whatever that, under the long well settled law of the subject, the testimony given by the plaintiff, Samuel B. Smith, himself, when on the stand as a hostile witness, with or without the corroboration afforded by the two newspaper articles, "Defendants' Exhibits A and B," conclusively establishes the prior public and commercial usage by Smith, at Cleveland, Ohio, of his above described machine to carry into effect his above described method of hatching eggs throughout the years 1913 and 1914. The testimony is conclusive not only beyond a reasonable doubt, but beyond even a shadow of a doubt. Said Smith's usage does not come within the exception stated by the U. S. Supreme Court in the *"City of Elizabeth vs. American Nicholson Pavement Co.,* 97 U. S. 126," but comes within the general rule set forth by this Court in the following cases:

Hall vs. Mac Neale, 107 U. S. 90;

Worley, et al., vs. Loker Tobacco Co., et al., 104 U. S. 340;

Smith & Griggs Mfg. Co. vs. Sprague, 123 U. S. 249;

International Crown Tooth Co. vs. Gaylord, 140 U. S. 55;

Root vs. Third Avenue Railroad Co., 146 U. S. 210.

Prior Patents and Other Publications.

The prior patents and publications make it clear that the patentee Smith was a late comer in a highly developed art and that if he did anything to warrant the issue of a patent to him, he did very little and at most the claim 1 of the

patent in suit is open to only a very narrow interpretation and to that interpretation accorded it in this case by the Circuit Court of Appeals for the Eighth Circuit.

The art of artificial incubation is a very old art dating, at least, from the time of the ancient Egyptians, where it was highly developed. More recent developments as shown by patents and publications make it clear that all the major problems of artificial incubation were recognized and met before Smith, the present patentee, appeared in the field.

Although numerous patents and publications were set up in the defendants' answer in this case, and many of them were introduced at the trial of the case and correctly described by defendants' expert witness, Professor Rowley, and his testimony in regard thereto has been for the most part incorporated in the record, only the most pertinent of these prior patents and publications will be here briefly described:

The Bonnemain Incubator.

This is disclosed in an article entitled "Incubation Artificial," appearing on pages 652 and 653 of "Ure's Dictionary, of Arts, Manufactures and Mines," published by Longmanns, Green & Co., London, England, in 1867 (R. 805-809). This article was never presented in any of the prior litigation under the Smith patent.

The said Bonnemain incubator as illustrated and described is adapted for large capacity. It consists of a large casing or chamber within which are located a tier of five superimposed vertically spaced egg containing trays. A hot water circulating pipe G running from a water boiler controlled by a heat regulator extends into the casing of the incubator above the highest tray and serpentines downward-

ly so that coils thereof are located between all the pairs of trays. There is a chick room or nursery directly adjacent one side of the main casing and the hot water pipe extends through this nursery in the form of a coil, and then extends back through the egg containing chamber through the lowest tray to the boiler R. Saucers N containing water supply the necessary humidity to the heated air within the casing, so that an atmosphere is created analogous to that under the body of the hen.

Special attention is called to the way in which the eggs were set and handled in the Bonnemain incubator. This is made clear in the following quotation taken from page 653 of the article (R. 809) (Italics ours):

> "When we wish to hatch eggs with this apparatus, the fire is to be kindled in the boiler, and as soon as the temperature has risen to above 100° F., the eggs are introduced; but only one-twentieth of the whole number intended, *upon the first day; next day a like number* is laid upon the trays, and *thus in succession for twenty days,* so that upon the twenty-first day the eggs first placed may be hatched for the most part and we may obtain daily afterwards an equal number of chicks."

Of course, it is obvious that, when the eggs are so set stage incubation within the same chamber is present. Moreover, inasmuch as it is said one-twentieth of the whole lot of eggs are set on successive days, it is also obvious that the successive settings must occupy *different places* in the incubator. Further, as only one tier of superimposed eggs is shown in the cut, it further follows that these different places must be at *different levels* within the casing of the incubator.

Obviously, the air circulation within the casing of the incubator is effected under the joint effect of heat and

gravity. Hence, from the stated way in which the eggs are set, it *necessarily* follows that the earlier settings of eggs, *i. e.,* the eggs in the more advanced stages will be developing more heat than the later settings of eggs, *i. e.,* the eggs in the less advanced stages; and therefore, heat from the eggs in the advanced stages of incubation will be transmitted through the air to the eggs in the earlier stages of incubation, not only by convection currents of the air but also by radiation.

Petitioner's brief writers, page 5 of their brief, attempt to make it appear that Smith was the first to hatch eggs in large quantities with tiered eggs set in stages in the same chamber and to stabilize the temperature of the eggs in the early stages of incubation and the temperature of the eggs in the later stages of incubation by utilizing the heat taken from the hot eggs to warm the cool eggs. Bonnemain successfully did this same thing before the French Revolution, as appears from the article in Ure's Dictionary.

The testimony in regard to the Bonnemain incubator appears in the record (R. 252-254) where the article itself is read into the record and the testimony of defendants' expert, Professor Rowley, relative to the said article, appears on pages 261 and 319 to 325 of the record. Although plaintiff's expert, Mr. Taggart (R. 406-407), attempts to show that the Bonnemain incubator was not adapted for successful commercial use in hatching eggs, he did not deny but that it could be used to hatch chicks.

The Winkler U. S. Patent, No. 286,756, Dated October 16, 1883, Entitled "Incubator" (R. 609).

This Winkler patent was repeatedly cited on the file wrapper record of the patent in suit. It discloses a large capacity incubator, wherein the eggs are so set and handled that stage incubation was present, and that the heat from the eggs in the advanced stage of incubation was carried to the eggs in the earlier stage of incubation. It is, therefore, a pertinent and material disclosure and must be understood. It discloses exactly the same kind of stage incubation as disclosed in the Smith patent in suit.

Part of the third paragraph of the specification, to-wit, lines 16 to 43, page 1, reads as follows:

> "The object I have in view in this invention is to overcome certain patent difficulties which attend the operation of machines now in use. A brief recital of these will serve to explain more clearly my object. During the progress of incubation the temperature must vary. At the beginning the eggs require a greater heat than at the close, because toward the end the embryo, having increased, furnishes a certain amount of heat for itself. For this reason the temperature produced by the apparatus should be gradually decreased during the process. This necessitates the complete charging of the incubator at the start. One lot of eggs cannot be introduced today and another in a week, because the temperature would be unsuitable for either one lot or the other. In large machines this immediate and large collection of eggs presents the difficulty of getting them fresh enough, or requires an outlay of money. My machine is so constructed as to allow the introduction of a fresh lot of eggs at short intervals, and gives to each lot its own

required temperature. This enables me to use successively perfectly fresh eggs without trouble, and makes the process continuous, which is a very desirable result in poultry-raising. Again, when all the eggs have reached an equal stage, and the young begin to come out, they are all crowded in the same apartment, or many are in several chambers. They hatch practically simultaneously, so that a great many are always wet. This necessitates the constant opening of the doors to remove them, which, by lowering the temperature, affects injuriously the other eggs; or, if allowed to remain, the young, in struggling about while still wet, smear the unhatched eggs and prevent their hatching; or they injure themselves on the broken shells or in the interstices between the eggs. My machine hatches them in small batches removed from the unhatched eggs, so that the temperature is not lowered by removing them, nor are they injured, nor do they injure the other eggs. Again, the ordinary machines are not adapted for all kinds of eggs (goose, turkey, duck, and chicken eggs placed therein promiscuously), because these having different periods of incubation, the periods of temperature for one kind will not answer for another. My machine provides for this, so that I am enabled to place all kinds of eggs and give to each its required period and temperature. These are some of the difficulties which I overcome."

The essential features of this Winkler incubator and its mode of operation may be correctly stated as follows:

The illustrated incubator includes a large rectangular casing, wherein the incubation of the eggs takes place, and a shallow lateral extension which receives the hatching eggs. Mounted in the main casing, is an endless conveyor of the

chain and slat type, which extends downwardly from the top of the casing in successive undulations over suitably spaced drums, or rollers, to the bottom of the casing, at which point the hatching eggs are delivered to the top of a horizontal belt located in the bottom of the lateral extension where the hatching is completed.

The said chain and slat conveyor then runs idle from the bottom to the top of the front wall of the main casing, as best shown in Figs. 1 and 2 of the drawings. Below the working runs or undulations of said conveyor and directly adjacent thereto, are stationary floor screens, the ends of which curve upwardly adjacent the rotary drums to guide the eggs moving downwardly with the moving conveyor. One end wall of the casing is provided with two horizontal doors marked, respectively, d and d^1, one near the top of the casing and the other at the lower end of that wall, and in the opposite end wall of the casing is another similar horizontal door marked d^2. One or the other of these three doors may be opened for permitting eggs to be placed on the said traveling conveyor. The choice will depend on whether or not the eggs are chicken eggs, duck and turkey eggs, or goose eggs, as these respective kinds vary in the number of days required for hatching. When chicken eggs are used, they are placed on the conveyor through the door marked d^2.

Said slat and chain conveyor is moved intermittently by a clockwork driving mechanism and this intermittent movement is properly timed. The eggs are turned by the travel of the conveyor. The eggs are set at different times and hatch at different times.

In the specification (lines 53-73, page 2 thereof) appears the following statement:

> "Knowing the times at which the conveyor is advanced its set distance, I am ready with a fresh lot of

eggs to put through the doors into the slats which are within reach. At the next time, these eggs have been carried forward and empty slats presented, into which I put another lot, and so on. In this way I put in, *at short intervals,* a limited number. The eggs being discharged below, the slats ascend empty, and the operation is continuous. The turning of the eggs is entirely automatic, for the reason that they rest on a stationary downwardly inclined floor, and are advanced by the traveling slats, between which they lie. They thus *roll,* and the distance which the conveyor advances at one time is regulated to turn them a quarter or a half turn, as the case may be. The curved ends of the floor sections D receive the eggs as they come around the drums. When they reach the bottom the chicks will have picked the shells, and the eggs must not thereafter be turned."

In the paragraph of the specification, beginning in line 92 on page 2, it is stated how heat and moisture are supplied to the eggs in the incubating chamber or interior of the main casing of the machine. Water jackets G are located in the casing and the sections thereof are of such construction that they overlie all the folds of the conveyor, but are independent of each other and so suspended that they may be independently raised or lowered to vary the space between the same and the eggs. The ends of the sections of said water jackets G are connected with each other by two flexible pipes h, one of which joins the bottoms of the jackets and the other the tops thereof, whereby the free circulation of the water is permitted. Under the main casing of the machine, are located coal stoves H having boilers I; and from the tops of these boilers extend flexible pipes i to the upper portion of the lower end of the lower section of said water jackets G.

Then flexible pipes i^1 join the bottom of the boilers with the lower portion of the lowest water jacket G. This is the way in which the heat is supplied to the incubating chamber.

Water containing pans K, located some on the floor of the incubating chamber and some between the so-called undulations or folds of the traveling conveyor, supply the requisite moisture to the heated air within said chamber.

The side walls of the incubating chamber are provided with a series of small holes k, so arranged that some thereof are directly under every undulation or fold of the egg conveyor, as clearly shown in Fig. 4 of the drawings, and the top wall of the incubator casing is provided with restricted air outlets, best shown in Fig. 1 of the drawings.

The clockwork mechanism by which the egg conveyor is intermittently advanced under step by step motion, is described in lines 38-66 on page 3 of the specification; but it is not thought necessary to detail the same here.

From the stated way in which the eggs are set and handled in this machine, it is perfectly obvious that stage incubation is present and that the eggs at different stages of incubation are so located that heat developed by the eggs in the advanced stages of incubation will be delivered to the eggs in the earlier stages of incubation. It is also obvious that there is present in the closed chamber of the incubator a plurality of eggs arranged at different levels and that this closed chamber has numerous inlets for fresh air in its sides and restricted openings in its top for the escape of foul air without undue loss of moisture. The air is constantly being moistened. The air is circulated under the action of heat and gravity and the supply of moistened fresh air substituted for the discharged foul air, keeps the body of air within the incubating chamber constantly vitalized.

The Winkler patent was briefly considered by Professor

Rowley, under direct examination, and his testimony then given appears on pages 263 and 264 of the printed record, which is substantially correct as far as it goes, with the exception of the incorrect usage of some of the reference letters, but is not complete enough for the full understanding of the Winkler disclosure.

Professor Rowley was shortly cross examined on this patent by plaintiff's counsel, Mr. Ely, and his testimony then given appears on pages 318-319 and on page 325 of the printed record; and by reference thereto, it will be seen that this cross examination did not cause Professor Rowley to make any change in the testimony given by him on direct. It simply brought out some more details of the disclosure.

Plaintiff's expert, Mr. Taggart, when on the stand in rebuttal, made a brief reference to this Winkler patent and what he then said appears at the head of page 407 of the record. The first sentence of which reads as follows:

"The Winkler patent describes stage incubation."

Especial attention is called to this adverse admission made by plaintiff's expert, as it admits the identical thing for which the Winkler patent was cited on the file wrapper record and the identical thing for which it was identified in the defendants' answer and introduced into evidence at the trial of the case.

What said Taggart there says in the additional sentences to the effect that, in his opinion, the Winkler patent is inoperative to hatch eggs, is not corroborated or substantiated in any way, and is directly in the teeth of the disclosure made in the Winkler patent. It is simply one of the numerous instances on the record, wherein this self interested witness expressed opinions showing on their face that his wish was the father of his thought.

The Stulik German Patent, No. 155,917, Dated November 7, 1901, and Entitled "Incubating Process and Device For Group Charging and Simultaneous Treatment of the Groups of Eggs Inserted at Different Times Into the Incubating Apparatus."

A photostatic copy of this patent is bound into the record on pages 729-733, inclusive, and a certified official English translation thereof is bound into the printed record at pages 733-743, inclusive. This patent was cited as a reference by the Patent Office during the prosecution of the application maturing into the Smith patent in suit.

Briefly stated, the German patent to Stulik disclosed an incubator wherein the eggs were set in stages and were hatched in stages, the eggs in different stages being all set in the same chamber and wherein, therefore, stage incubation was present. The stage incubation used by Stulik was somewhat different than the stage incubation of the Smith patent in suit for the reason that the air moved by convection straight through the machine from the eggs in the less advanced stage of incubation to those of the eggs in the most advanced stage of incubation. Although the eggs in the less advanced stages derived heat from the eggs in the most advanced stages to some extent by radiation, very little heat was carried from the eggs in the more advanced stages to the eggs in the less advanced stages through air movement.

The Zimmer U. S. Patent, No. 1,075,747, Dated October 14, 1913, Entitled "Semi-Fireless Incubator" (R. 795-803).

This patent was not cited in the file-wrapper record of the Smith patent in suit. It was considered by defendants' expert, Professor Rowley, under direct examination (R. 267 to 270) and under cross examination (R. 313 to 318).

The Zimmer patent discloses an incubator and hatching method wherein the eggs were set in stage incubation within the same chamber and wherein the heat of the hatching eggs in the later stages of incubation were utilized to supply the necessary heat to the cool eggs in the earlier stages of incubation. The heat was transferred from eggs of one stage to eggs of another stage by convection movement of the air and by radiation. The particular type of stage incubation disclosed in the Zimmer patent is somewhat different than the particular type of stage incubation disclosed in the Smith patent in suit.

Partial Conclusion as to Stage Incubation.

In view of the disclosures made in the above considered article, taken from Ure's Dictionary of Arts, Manufactures and Mines, published in 1867, the disclosure made in the *Winkler* patent, the disclosure made in the Stulik patent, and the disclosure made in the Zimmer patent, it is perfectly obvious that Samuel B. Smith, the patentee of the patent here in suit, did not originate stage incubation. The said article in Ure's Dictionary disclosed stage incubation over fifty-eight years before Smith used it. Winkler disclosed it in his patent of October 16, 1883, above considered, or at a date over thirty-two years before Smith appeared; and Stulik disclosed it in his German patent 155,917, of November 7, 1901, at a date over fourteen years before Smith appeared in this field, and in the introductive part of his specification, Stulik made it clear that at least two forms of stage incubation had been in commercial use before he made his improvement thereon disclosed in his said patent.

The Winkler patent disclosed the same identical form of stage incubation that is disclosed in the specification of the

Smith patent in suit, including the shifting of the said eggs at intervals, from higher to lower levels, and thereby got the eggs so disposed relative to each other within the casing that the heat generated by the eggs in the advanced stages of incubation was transmitted to the eggs in the earlier stages of incubation.

As has been before brought out in this brief, Smith, himself, used a form of stage incubation in the method of hatching eggs publicly and commercially practiced by him in Cleveland, Ohio, during the years 1913 and 1914, more than two years before he filed his application maturing into the patent in suit. The stage incubation used by Dr. Smith at that early date, however, was not the particular type of stage incubation disclosed in the patent and to which claim 1 of the patent is limited for the reason that in his prior art machine the eggs of different ages were not all set in the same chamber and were not successively shifted in position from higher to lower levels, so as to cause the heat to pass from the eggs in the more advanced stages to those in the less advanced stages, as required by claim 1 of the patent.

The Guerin U. S. Patent, No. 3,019, Dated March 30, 1843, Entitled, "Egg Hatching Apparatus" (R. 745).

This patent was identified and briefly explained by Professor Rowley (R. 261-263), and he was shortly cross examined regarding same on page 331 of the record. It was not cited during the prosecution of the Smith application.

This is a very early incubator patent and discloses a large capacity incubator, wherein the eggs are placed and held in tiers of superimposed trays, arranged along one or more sides of a large building. In the drawings, three trays are shown in each tier. There was space below the tiers or trays used as

a nursery for the hatched chicks. Heat was supplied by steam from a boiler. The pipes extended around all sides of the building near the floor thereof below the trays of eggs. The furnace for the boiler had a comparatively high stack. The room had large fresh air inlets L located directly below the tiers of trays. Water was supplied to the air from a water trough extending entirely across the floor of the room. Reliance was placed upon gravity and the heat to circulate the air. The outlets for the used air are not specified but probably were through the doors or other openings in the building.

This patent was introduced simply to show how early large capacity incubators had been disclosed in this art, wherein the eggs were held in many tiers of many superimposed trays, and wherein the circulated air was heated and moistened, and kept vitalized by a constant admission of fresh air.

The Bassini and Heyden U. S. Patent, No. 330,457, Dated November 17, 1885, Entitled, "Incubator" (R. 623-629).

Professor Rowley briefly considered this Bassini and Heyden patent, under direct examination (R. 270-271), and under cross examination (R. 329-331). This patent was cited in the file-wrapper record of the Smith patent in suit.

This Bassini and Heyden patent illustrates and describes an incubator having a rectangular casing, the interior of which contains, adjacent to its side walls, two tiers of superimposed egg-containing trays, with the two tiers so spaced apart as to afford a central corridor between the tiers of trays, but in communication therewith. The interior of the incubator is heated by hot water from an exterior boiler B through coils of circulating pipes e disposed within the in-

cubator so as to afford a complete circuit for the water flowing from the top of the boiler back to the bottom of the same. The trays have bottoms composed of spaced bars of frames slidably mounted within the incubator, so that by sliding these frames the eggs can be turned. Fresh air is admitted to the interior of the casing through opening a, controlled by a pivoted lid (see Fig. 1) and the foul or used air is let out through a hole or opening in the top wall of the incubator covered by a damper j and subject to thermostatic control, which includes an electric solenoid magnet having the free end of its armature connected to said damper, and which solenoid is located in an electric circuit from a battery controlled by a mercural thermometer located in the central corridor of the incubating chamber, as best shown in Figs. 1, 2 and 3. In the incubator are located pans g underneath the lowermost egg-containing trays and through which pans the tubes of the lower coil of the water circulating pipes pass, as shown in Fig. 2, and it is said that this will produce evaporation from said pans and thus supply the needed moisture. The air circulates under the joint effect of heat and gravity, and under the thermostatic control, it is obvious that the used or foul air will be let out and be substituted by fresh air, so as to keep the temperature uniform and vitalizing fresh air present in the incubating chamber.

The Van Keuren U. S. Patent, No. 1,160,793, Dated November 16, 1915, Entitled, "Incubator," and Granted on an Application Filed June 12, 1915 (R. 719-727).

This patent was considered briefly by Professor Rowley (R. 273-274), under direct examination. Professor Rowley was not cross examined respective to this patent.

This patent was repeatedly cited as a reference on the file wrapper record of the Smith patent here in suit, and no attempt was made by Smith to carry his invention back beyond the filing date of Van Keuren's application. Hence, under the settled law of the subject, the disclosure of this Van Keuren patent must be treated as part of the prior art in respect to Smith.

The disclosure of this Van Keuren patent is material and of controlling weight in respect to some of the features involved in the machine of the Smith patent and the mode of operation thereof.

The Van Keuren patent discloses an incubator of considerable capacity. Its casing is of rectangular form in cross section and, by suitably placed partitions, the interior thereof is divided off into two side compartments and a central corridor. In the side compartments are located tiers of superimposed egg-containing trays. The side walls of the corridor are afforded by the vertically disposed partition plates or corridor walls 7 which terminate near the bottom of the casing, but slightly above the same so as to afford openings 8 extending from the corridor into the side compartments of the casing below the tiers of eggs. The top of the corridor is closed by a top plate 9 extending to the vertical side plates 7 of the corridor. To the said top plate 9 of the corridor is fixed a horizontal deflecting plate 10.

Underneath the casing is located a moistening tray 32 slidably mounted in a box 33, which box has a series of openings or slots 35 in its top, which afford communication with the lower part of the corridor and the side compartments of the incubator.

A heater, of the shape shown in Fig. 6, has a laterally extended circulating flue 22, which, when the parts are in working position, takes the position shown in Fig. 5 of the draw-

ings, so that the circulating coil and its guard plates 27 are entirely within the corridor of the casing and the shell of the heater is outside of the casing. The outlets for the products of combustion are afforded by the stack 20 and its hood having exit openings in its side walls above the stack 20. The radiator coil 18 and its guard plates 27 do not fill the space within the central corridor as can be clearly seen on reference to Figs. 2, 4 and 5.

Fresh air is available to this space of the corridor through the slots in the opening of the box 33 holding the open tops of the moistening tray 32 and the slot 37 in the bottom wall of said corridor. This fresh air is then heated in the corridor of the said radiating coil 18 and, under the action of the heat, will rise, but as it cannot get out at the top of the corridor, it comes back down along the inner surfaces of the side walls 7 of that corridor, until it reaches the lower edges of the same or openings therein, which permit it to pass laterally into the spaces 8 below the lowermost of the egg-containing trays in the side compartments. Thence, the heated air travels upward through the tiers of superimposed trays to the top of the incubator, where a large part of the up-moving currents of air will strike the under side of the horizontal deflector 10 and be forced to travel around the outer edges of said deflector, before it can reach the air outlets afforded by the ventilator 38, which extends the whole length of the incubator on the top of the casing thereof.

The egg-containing trays are stated to have bottoms made up of wire screen cloth and the perforations or meshes thereof show in Fig. 2 of the drawings.

The circulation of the air is effected under the effect of heat and gravity. Fresh air is constantly coming in and used air constantly going out and the incoming air is moistened to afford the requisite amount of oxygen and water to

the eggs. The carbon dioxide emitted by the eggs is carried out with the discharged air. In other words, the air being used within the incubator is kept vitalized all the time.

Obviously, this Van Keuren patent makes a clear disclosure of a practicable incubator from which disclosure Smith could have taken and probably did take some of the principal conceptions embodied in the machine of the Smith patent and in its mode of operation. The two casings are practically identical and are sub-divided by partitions in the same way so as to afford a central corridor and two side compartments. In both the air is heated in the corridor, and by the partitions forming the corridor walls it is forced to travel first down through the corridor to points below the lower edges of the corridor walls and then to travel laterally under the tiers of eggs and up through and about the eggs in the trays. So far as air circulation is concerned, there is no material difference between the air circulation of the Smith patent and the air circulation of Van Keuren, with the exception that in the Smith patent there are propelling fans near the top of the corridor while in Van Keuren there are no fans, Van Keuren relying on heat and gravity to effect the circulation of the air. Also in the Smith patent, part of the used air in the incubator is revitalized and recirculated in a new cycle of air movement, while in the Van Keuren patent this is not the case.

The Bell U. S. Patent, No. 691,837, Dated January 28, 1902, Entitled, "Incubator" (R. 655-661).

This Bell patent was repeatedly cited on the file-wrapper record of the Smith patent in suit and was briefly considered by Professor Rowley under direct examination (R. 272). Rowley was not cross examined in respect to the Bell pat-

ent. The Bell patent discloses a large house-like casing within one side of the chamber of which are located three tiers of superimposed egg trays, nine trays to a tier. The chamber forms a corridor at the opposite side thereof from the egg trays. Obviously, the incubator is of great capacity. Below the tiers of trays is located a suitable heater for maintaining the proper temperature in the chamber and water containing pans for moistening the air. Access to the corridor is afforded by a door.

Fresh air is supplied through inlet pipes numbered 14 in the drawings extending through the side walls of the chamber of the incubator. An outlet for the used air is mounted in the top wall of the chamber of the incubator and the flow of air through this outlet is controlled by a thermostatically operated damper, the thermostat of which is operated by the temperature of the air within the chamber of the incubator. The air outlet lets the used air into the garret, under the sloping roof of the room, and it is stated that the sloping sections of the roof are "provided with sufficient cracks to permit the hot air to escape from this upper chamber, which thereby partially confines the escaping hot air, causing the same to escape slowly and preventing the lower egg receiving compartment from becoming suddenly chilled" (Bell patent, page 2, lines 1 to 6).

The Bell patent obviously discloses a practicable incubator of large capacity affording all the necessary conditions for the successful hatching of eggs. Attention is called to the fact that, while the manner of setting the eggs is not stated in the specification it is obvious that the eggs can be readily set in the stage incubation in the Bell machine after the manner of Bonnemain, or any other desired type of stage incubation can be used in the Bell machine.

The Koons U. S. Patent, No. 916,454, Dated March 30, 1909, Entitled, "Incubator" (R. 689-704).

This Koons patent was cited on the file-wrapper record of the Smith patent in suit. It was considered by Professor Rowley under direct examination (R. 274-276). Rowley was not cross examined in regard to this patent.

It is sufficient to state in regard to this Koons patent that it discloses an operative incubator consisting of a closed chamber within which the eggs are stacked in tiered racks and to which heat is supplied by a thermostatically controlled heater having a stack. A fresh air inlet is provided in the lower part of the chamber and this fresh air flows up and around the various egg trays. Air outlet openings running from the chamber to the stack of the heater are provided and these air outlet openings create a *forced draft* through the chamber of the incubator. This forced draft is created on the ejector principle in the same manner as is the forced draft through the boiler flues of a locomotive. In other words, the forced draft is produced by suction created by the pull of the air going out of the chimney or stack of the heater.

Koons, therefore, discloses an incubator and a hatching process wherein forced air current is "created by means other than variations in temperature." He emphasizes this forced draft air circulation and his patent contains claims to his means of producing the same.

Comment As to Patents and Publications Taken From Arts Analogous to the Incubating Art.

There were introduced into evidence, at the trial of this case, a number of patents and prior publications relating to

arts differently named from but analogous to the incubating art. These patents and publications are considered pertinent for the reason that in these other arts as well as in the incubator art, the problems and solutions to these problems were the same. The material acted on was, of course, different. In the incubating art the material acted upon was eggs. In these other arts, the material acted on was in some cases, tobacco, and in some cases macaroni and like products. As in the incubator art, whether the machines and processes described therein were utilized for curing tobacco, or for drying macaroni or for other like purposes, temperature control, moisture control and fresh air control, with economy and simplicity were the desideratums. It is, therefore, proper for this Court to consider these patents in the said related arts.

There were also introduced into evidence at the trial of this case several patents and publications relating to the household ventilating art. These patents and publications are pertinent as Judge Hickenlooper pointed out, in the District Court case, on this same patent, entitled *Buckeye Incubator Co., et al., vs. Petersime, et al., unreported.* The problems in household heating and ventilation are identically the same as those under consideration in artificial incubation. The temperature in the space being heated and ventilated must be maintained such as to permit persons to live comfortably, in the same manner as the temperature in an incubator must be maintained properly to promote the development and life of the chicks in embryo.

The proper amount of moisture must be maintained in the air in which persons live to promote healthy conditions in the same manner as the proper amount of moisture must be supplied to the incubating chambers within which eggs are hatching. The proper amount of fresh air must be admitted

and the proper amount of used air must be discharged from the rooms wherein human beings live to promote healthy conditions in the same manner that the proper quantities of fresh air and the proper quantities of used air are respectively admitted to and discharged from the chambers within which chicks are being hatched.

That the Courts have considered the art of incubation to be analogous to the art of heating and ventilating is shown by the decision of the Circuit Court of Appeals for the Second Circuit in the case entitled *"Jones v. Cyphers,"* decided Nov. 24, 1903, and reported in 126 F. R. 753. This was a suit for the alleged infringement of certain claims of the Jones patent No. 586,088 dated July 6, 1897, for "Improvements in Incubators and Brooders" and these claims were held invalid for lack of patentable invention over the disclosures made in the prior patent to Schulze No. 101,168 of March 22, 1870, for a "System of Heating and Ventilating" and the prior patent to Vanderheyden No. 504,544 of Sept. 5, 1893, for a "Sanitary House." It was urged in that case by the plaintiff-appellant that these prior patents were not in an analogous art but to this the Court replied as follows:

> "Whether houses and incubators are or are not in the same class is unimportant. The patent in suit deals with the problem of ventilating an incubator; the two earlier patents with the problem of ventilating a house or a room; and we are clearly of the opinion that the devising of systems of ventilation belongs to a single art, whether such systems are to be applied to a hospital, a sewer, a ship's hold, a cold storage box, an *incubator* or any other structure where circulation of air is sought to be secured."

The Proctor and Knowles U. S. Patent No. 426,321, Dated April 20, 1890, Entitled "Drying Machine" (R. 765-771).

This patent was not cited during the prosecution of the Smith application in the Patent Office. It was considered at the trial of the case by Professor Rowley under direct examination (R. 277 and 278). There was no cross examination of Rowley relative to this patent.

Although various forms of the machine of the patent were illustrated and their operation described, attention is called particularly to that form shown in Fig. 8 of the drawings, inasmuch as the machine there illustrated is very similar in construction, and in operation to the incubator of the Smith patent in suit. Double rooms were shown in Fig. 8 of the drawings but it is only necessary to consider one of these rooms.

The Proctor and Knowles machine shown in Fig. 8 consists of a large rectangular casing or "room" corresponding in size to the incubator of the patent. This room is divided near its top by a horizontal false ceiling to form an upper gallery and a lower chamber within which the material to be operated upon is held. The outer portions of this false ceiling B are perforated. A so-called funnel G or cowl projects downwardly from the central portion of the false ceiling B and acts as a confining and directing skirt for air streams blown downwardly by a fan C mounted in a central aperture in the false ceiling B. The fan C draws its air from the gallery of the machine, some fresh air being admitted to the gallery in much the same manner as the Smith patent through a door H (air inlet). Used air is allowed to escape from the casing through a door I (air outlet) and thence to a stack J. Steam coils F, furnishing heat to the room, are arranged about the upper portions of the sides of the cowl

G immediately below the false ceiling B.

In operation, the fan C draws air from the gallery above the same, part of this air being fresh air admitted through the inlet door H and part of it being used air drawn through the perforations in the false ceiling B to the gallery after it has been first circulated to the chamber within which the goods being treated are held. The fan C forces the air downwardly through the cowl G in columnar form, this cowl confining the air and directing it in much the same manner as do the curtains in the corridor of the Smith incubator. The air moves downwardly through the center of the chamber in the Proctor and Knowles machine and then it mushrooms out as shown by the arrows in Fig. 8 and moves upwardly, chiefly in columnar form, part of the air being exhausted through the air outlet door I and part of it passing back to the gallery where it is again recirculated in the next cycle of movement in the machine.

Although the patent does not state that moisture is supplied to the air, it is obvious that this might be done by any mechanic skilled in the art if the Proctor and Knowles machine were to be used as an incubator, for example, as shown in numerous incubator patents, some of which have already been called to the attention of this Court. It is also obvious that eggs could be set in stage incubation in this Proctor and Knowles machine after the manner of Bonnemain or after the manner of Winkler without requiring invention. In other words this Proctor and Knowles machine could, with ordinary common sense, have been used as an incubator by any one conversant with the incubator art long before Smith ever applied for his patent and when so used the method of hatching carried out therein would have been practically identical with that disclosed in the Smith patent.

The specification of the Proctor and Knowles patent shows

on its face that the machine was not intended to be confined to any particular specific usage, but was intended to be used in all kinds of drying machines.

The Goldstein U. S. Patent, No. 1,137,752, Dated May 4, 1915, Entitled, "Apparatus For Curing or Artificially Aging Cigars," Granted On An Application Filed June 20, 1914 (R. 715-719).

This Goldstein patent was repeatedly cited on the file-wrapper record of the Smith patent in suit. Professor Rowley's testimony under direct examination appears (R. 282-283). He was not cross examined in regard to this patent.

Briefly stated, the Goldstein machine was designed for curing or artificially aging cigars. This machine includes a large outer casing and an inner casing having one end wall and two side walls common with the outer casing. The other end wall of the inner casing is spaced from the other end wall of the outer casing to form a corridor within which is located near the bottom a hot water heating coil 11, near the middle a motor driven fan 12 and near the top a humidostatically controlled humidifier 13 consisting of a tank within which water is held and electrical heating elements disposed for heating and evaporating the water therein. The top wall of the inner casing is spaced below the top wall of the outer casing, while similarly the bottom wall of the inner casing is spaced above the bottom wall of the outer casing to form air circulation passages 9 communicating with the corridor. The top and bottom walls of the inner casing are apertured to permit the travel of air therethrough. A hot water boiler supplies the hot water to the heating coil 11 and a thermostatically controlled mechanism maintains the temperature within the inner and outer casing uniform at all times. The

inner casing is provided with a door through which access may be had to the same for the insertion and withdrawal of the goods to be treated.

The fan 12 located in the corridor draws air upwardly from about the heating coil 11 and forces the same over the humidifier 13 where moisture is imparted to the air, whereupon the air travels laterally through the upper passage 9 and then moves downwardly through the openings in the top of the inner casing into the inner casing to treat the goods contained therein, whereupon the air passes downwardly through the openings in the bottom of the inner casing into the lower passage 9 and runs laterally through this passage back into the corridor to the heating coil 11 and recycles. By providing air inlet and outlet openings in this machine, which could be done by anybody familiar with the incubation art, as it existed at the date of said patent, the machine could be used for hatching eggs. The air circulation is quite similar to the air circulation in the Smith machine with the exception that the air travels in different directions, through the corridor and through the material treated in the Goldstein machine, than does the air in the Smith machine.

The Schmidt & Schutterle U. S. Patent, No. 1,010,809, Dated Dec. 5, 1911, Entitled "Apparatus for Drying Macaroni and Like Bakery Products" (R. 783-794).

This Schmidt and Schutterle patent was not cited on the file-wrapper record of the Smith patent in suit. It was considered under direct examination by Professor Rowley (R. 280-282) and under cross examination (R. 332).

Upon inspection of Fig. 1 of the drawings, of this patent, it will be seen that there is disclosed a large casing which looks almost exactly like the Smith incubator with the excep-

tion that the Schmidt and Schutterle machine has two doors at its front while the Smith machine has only one door.

From the drawings and description, it will be seen that the interior of the casing is partitioned by a vertical transverse wall W having a large screened opening therein to afford a corridor at the rear end of the machine wherein there is placed heating coils E and an air moistening or humidifying device (steam spray 15). Mounted within the opening of the wall W within this corridor there is mounted a long bladed fan B mounted to turn on a horizontal axis. Forward of the wall W is located the compartment within which trucks or carriages for carrying the material to be treated are located. These trucks or carriages are of two types and one of the types illustrated is in the form of a rack carrying mesh bottomed trays. There is also a ceiling horizontally disposed directly above the corridor and tray containing compartment but stopping short of the front end of the latter. This ceiling is so placed as to afford a gallery within the casing above the same, which gallery is in communication at its front end with the tray containing compartment and it is in communication at its rear end with the corridor. Where the ceiling 10 projects over the corridor it is provided with a hinged door 12, shown best in Fig. 2 of the drawings, which door through suitable mechanism can be raised and held in raised condition. A fresh air inlet door 7, shown in Figs. 2, 3 and 4, is provided in the rear wall of the machine to admit fresh air to the corridor while used air outlet doors 9, shown clearly in Fig. 1 as well as on the other views, are provided in the top of the machine.

When the machine is in operation with the door 12 over the corridor in the raised dotted line position shown in Fig. 2, and with the air inlet door 7 opened and with one or both of the outlet doors 9 opened, the action of the machine is as

follows: The fan B will draw air from the corridor and force this air chiefly in horizontal direction through the material stored in the racks of the trucks in the tray-containing compartment. Part of the air drawn into the fan B will be fresh air admitted to the corridor through the air inlet door 7, while part of the same will be air drawn from the gallery into the corridor, *i. e.*, air that has at least once been recirculated through the machine. The fresh air mixes with the used air in the corridor and the composite body of fresh and used air is heated by the heating coils E and moistened by the steam admitted from the moistening device 15. It is, therefore, air vitalized by moisture and fresh air and tempered by the heating coils that is passed through the material held within the racks in the tray-containing compartment. The air moves through and about the various trays in the racks and then passes to the front of the tray compartment where it moves upwardly to the overhead gallery above the ceiling 10. The air then travels in the gallery toward the rear of the machine, some of the used air being discharged to atmosphere through the air outlet doors 9 and the remainder of the air being drawn into the corridor to be reconditioned by moisture, heat and fresh air preparatory to the next cycle of movement.

Although the patentees stated that the machine was designed especially for drying macaroni, they further stated, page 1, lines 25 to 28 of the patent, that the apparatus was not necessarily limited to this single use or product. It is obvious that this machine without any change whatsoever is capable of use for the successful hatching of eggs. Professor Rowley so stated in his testimony. He further brought out the fact that this machine in its operation incorporated all features necessary for the successful hatching of eggs. Part of his testimony in this respect (R. 281-282) and certain

questions put to him relative to this machine read as follows:

"* * * Now, in this apparatus, we have an apparatus which has got all the elements of an incubator. We have got a chamber and heating control; we have got humidity; we have got new air supply and old air provided for; we have got in the compartment racks or trays which could be used for egg trays, or a space which could be provided with suitable egg trays. If, in that space, suitable egg trays were provided, this machine has all the elements for hatching, just the same as in the other incubators. We have got temperature, humidity and air circulation and new air—the requirement would be suitable egg trays. * * *

* * * Q. Now state whether or not, in your opinion, the machine disclosed in that patent that you have just been discussing, to-wit, the Schmidt and Schutterle patent 1,010,809, of Dec. 5, 1911, could be used just as it is there disclosed, for hatching eggs? * * *

* * * Q. Go ahead.

A. Yes.

Q. You said you can?

A. I answered your question 'Yes!'"

Eggs could be set in this machine by any one conversant with the incubator art in precisely the same way that they were in the Bonnemain incubator disclosed in the article taken from "Ure's Dictionary" and when so set staged incubation would have been present together with a fan-produced forced draft so that a method of hatching would have been carried out corresponding to the method that petitioners allege claim 1 of the patent in suit is broad enough to dominate.

The Peters and Hungerford U. S. Patent No. 843,909, Dated Feb. 17, 1907, Entitled "Atmosphere Regulating System" (R. 773-778).

This Peters and Hungerford patent was not cited on the file-wrapper record of the Smith patent in suit. It was considered by Professor Rowley under direct examination (R. 286-288) and his testimony shows that in the heated and ventilated room illustrated in the drawings, all the conditions essential for the incubation of eggs therein are present, and (R. 288) Professor Rowley states that this identical apparatus could, in his judgment, be used successfully as an incubator. He also states that the Peters and Hungerford disclosure of heating a room and ventilating and air conditioning the same is common practice according to his own experience. Professor Rowley was not cross examined in respect to the patent.

By reference to the drawing and specification of the Peters and Hungerford patent, it will be seen that there is provided a room to which conditioned air is forced by a blower. From the blower 16 the air may be made to pass to either a cooler or a heater or through both by means of by-passes, one of which is under thermostatic control from the room, and the other of which is under humidostatic control from the room. After the air is heated or cooled it passes to an air moistening device 48 under humidostatic control from the room to permit the air to take on the proper humidity. The air is admitted to the room from a trunk conduit and is drawn off from the room by means of the blower. As much air as desired taken from the room may be recirculated or it is possible to mix this used air with any desired quantity of fresh air or to circulate fresh air alone.

It is made clear by the patentees, Peters and Hungerford,

that their device can be used anywhere to maintain uniform conditions as regards temperature, humidity and ventilation.

Eggs could be set in stage incubation in the room of the Peters and Hungerford patent after the manner of Bonnemain and hatched successfully.

The Article Entitled, "Ventilator" Appearing in Volume III of Knights American Mechanical Dictionary on Pages 2704 and 2705 Thereof (R. 811-813).

By reference to said article, it can be seen that it includes a large cut, having printed below the same the following words, to-wit, "Sectional view of the Senate wing, United States Capitol, showing the pressure and exhaust ventilating apparatus"; the said dictionary shows on its title page that it was published by Houghton, Mifflin and Company at Boston in 1884.

This is, of course, a proper subject for judicial notice but the photostat exhibit was stipulated by counsel for the parties.

Professor Rowley briefly considered the disclosure made in this article under direct examination (R. 284-285) and under cross examination (R. 328-329). The description contained in the article itself is short and reads as follows:

This article is illustrative of the fact that the same type of air conditioning is used for human beings as is used in incubators for hatching chicks. The U. S. Senate Chamber could be used as an incubator.

SECTION 3. THE TRUE MEANING OF CLAIM 1 OF THE PATENT AS DETERMINED FROM THE FILE-WRAPPER RECORD.

The estoppels arising from the file-wrapper record of the Smith patent in suit, while the application for that patent was being prosecuted in the U. S. Patent Office, confine the claim to the meaning accorded thereto by the Circuit Court of Appeals for the Eighth Circuit in this case.

A certified copy of the file-wrapper record of the Smith patent is in evidence as "Defendants' Exhibit O" (R. 847-890).

Said file-wrapper record will now be traced in so far as deemed necessary to determine the meaning accorded to the relied on method claim 1 at the time the patent was granted. It will be helpful to first make a brief summary statement.

Four groups of method claims were presented, at different times, and the first three of these successive groups of method claims were successively rejected on references cited and thereafter eliminated by the applicant; but the fourth group of claims were all narrower and were passed as allowable and matured into what are now claims 1, 2 and 3 of the patent.

Petitioner's chief contention in this case is that claim 1 of the patent calls simply for stage incubation and forced draft combined in a hatching process. *All of said rejected and eliminated groups of claims contained one or more claims, which, in substance, called simply for stage incubation and forced draft and none thereof were ever allowed.* Petitioner is, therefore, now estopped from receiving any such broad interpretation of the claim. This fact will now be verified by tracing the file-wrapper record in detail.

When the application was first filed, it contained five method claims, numbered respectively 1, 2, 3, 4 and 25 and

of these claims, claims 1 and 25 were the broadest. They read as follows:

> "1. The method of hatching eggs by arranging the eggs in a column and applying heated forced air about the eggs, the heated air being adapted to the eggs in various stages of incubation.
>
> 25. The method of hatching eggs by arranging the eggs in a column one above the other and forcing heated air through said column."

Claim 2 was more limited than claims 1 and 25 inasmuch as it called for the eggs in the earliest stages of incubation to be arranged in substantially horizontal planes at one place in the egg column and it further called for the eggs in the later stages of incubation to be arranged in planes inclined to the horizontal and at a different place in the same column of air.

Claim 3 was narrower than claims 1 and 25 inasmuch as it called for the eggs in different stages of incubation to be placed in different parts of the column of heated air, and it also called for the eggs in the more advanced stages to be arranged in tilted position.

Claim 4 was narrower than claims 1 and 25 inasmuch as it called for the eggs in the earliest stages of incubation to be in one place in a column so arranged that the air can circulate around them and the eggs in the more advanced stages of incubation to be arranged in a different place of the column of air whereby the air will be forced through and around the eggs.

Claims 2, 3 and 4 carried limitations therefore which prevented them from being given an interpretation to cover merely stage incubation and forced draft. Claim 1, however, was a broad claim calling simply for a method of hatch-

ing eggs wherein stage incubation and a forced draft was employed. Claim 25 was by far the broadest claim of the lot in that it simply called for a method of hatching eggs by arranging the eggs in a column one above the other and forcing heated air through the column. In other words, claim 25 makes no call for stage incubation.

On the first official action, paper No. 2 (R. 873), and dated Nov. 1, 1916, the original method claims 1 and 25 were rejected on the prior U. S. patents to Morgan 272,744 of Feb. 20, 1883; Winkler 286,756 of Oct. 16, 1883; Bassini, et al., 330,457 of Nov. 17, 1885; Campbell 344,474 of June 29, 1886; Boyd 828,181 of Aug. 7, 1906; Van Keuren 1,160,793 of Nov. 16, 1915, and on the German patents to Mann 117,089 of Feb. 4, 1901, and Stulik 155,915 of Nov. 11, 1904.

In respect to these references, it was stated, in the official action, as follows, to-wit:

> "The references show the 'column.' The air is forced by the arrangement of the heating means which causes the heated air to rise and thus produce the circulation of air."

Then the said original method claims 2, 3 and 4 were rejected in a paragraph reading as follows, to-wit:

> "Claims 2, 3 and 4 are rejected on Stulik suggesting arranging the eggs in different places in the column at different periods of incubation in view of Perkins, 745,458, of December 1, 1903, suggesting inclining some of the eggs."

Then on the first amendment filed March 6, 1917, paper No. 3 (R. 879), the applicant amended claim 1 by substituting the word "impelled" for the word "forced" in line 2 of the claim and he made minor amendments in claims 2 and 3. With the amendment applicant's attorneys presented an ar-

gument and asked for reconsideration and allowance of the claims.

On the next or second official action, dated March 24, 1917, paper No. 4 (R. 885), the Examiner again rejected all of the method claims citing some additional references. His action in part reads as follows:

> "Claim 1 is rejected on each of Bassini, *et al.*, Campbell, and Bell and Boyd, suggesting eggs in a column and heated air that arises and passes around them in view of each of Endemann, 120,253, October 24, 1871; Jones, 152,644, June 30, 1874; Verna, 891,019, June 16, 1901, suggesting 'impelling' the air. * * *
>
> "Claims 2 and 3 are rejected in the same manner as claim 1, in view of Winkler, suggesting eggs of various stages of incubation arranged at different places in the column of air (in Winkler air comes in through k and goes out through the openings in A) and of Christianson, suggesting some eggs in inclined planes. This gives the process claimed as it would not be inconsistent with the process disclosed in this claim to apply heat in the middle of the column of air.
>
> "Claim 4 is rejected in the same manner as claim 3, omitting Christianson.
>
> "Claim 25 is rejected in the same manner as claim 1."

Then, after considering also the apparatus claims, and rejecting most thereof, the Examiner ended his letter with a sentence which reads as follows, to-wit:

> "As the references indicate, applicant has new matter in his application, but has not *limited* his claims sufficiently to bring it out."

Then the applicant submitted a second amendment, filed April 7, 1917, paper No. 5 (R. 893). In this amendment

claim 25 was cancelled. Claims 2, 3 and 4 were further limited by amendment and claim 1 was amended to read as follows (the part added by this second amendment and by the first amendment being here placed in Italics):

> "1. The method of hatching eggs by arranging the eggs *of various stages of incubation* in a column and applying heated air *impelled* about the eggs, the heated air being adapted to the eggs in various stages of incubation."

Although claims 1, 2, 3 and 4 were narrowed by the limitations added to the original claims, it is clear that the amended claim 1 calls simply and only for a method of hatching eggs wherein stage incubation in a column and a forced draft were employed. The expression in that claim "applying heated air impelled about the eggs" is the same identical thing as a call for forced draft.

On the next or third official action, dated April 12, 1917, paper No. 6 (R. 899), all of the amended method claims were rejected in paragraphs of Examiner's letter reading as follows, to-wit:

> "Claims 1 and 4 are rejected on the same references as in the last office action, taken with Winkler, which suggests trays arranged with the newest at top and oldest at bottom but with heaters in the middle of the column. This would give the method claimed.
>
> "Claims 2 and 3 are rejected in the same manner as claim 1 in view of Christianson."

On the next or third amendment, paper No. 7, filed April 23, 1917 (R. 903), the applicant cancelled all his standing claims, numbered 1 to 12, inclusive, which included all of the method claims then in the case and substituted six new method claims which form the second group of method claims

submitted. These substituted claims are numbered from 1 to 6, inclusive, and they read as follows:

"1. The method of hatching eggs by arranging the eggs in various stages of incubation in a column, the eggs in different stages of incubation being in different levels, and applying heated air driven at a predetermined speed about the eggs, whereby the heated air will be adapted to eggs in various stages of incubation.

"2. The method of hatching eggs by arranging in *one chamber* eggs in various stages of incubation, the eggs in different stages of incubation being in different parts of said chamber, and applying heated air driven at a predetermined speed or velocity about all the eggs, whereby the heated air will be adapted to eggs in various stages of incubation.

"3. The method of hatching eggs, consisting arranging eggs in various stages of incubation in an enclosure, the eggs in different stages of incubation being placed in different levels and applying heated air to said eggs, said heated air being driven by mechanical means at a predetermined speed about the eggs to maintain same at a maximum degree of temperature of 105° and a minimum degree of 100°.

"4. The method of hatching eggs by arranging the eggs in various stages of incubation in an enclosure and placing the eggs in different stages of incubation in different places in the enclosure, and thereafter forcing heated air at a predetermined speed or velocity about all of the eggs, whereby the eggs in the most advanced stages of incubation will be maintained at a degree of temperature less than 105° by the velocity of heated air, substantially as specified.

"5. The method of hatching eggs by arranging eggs

in various stages of incubation in an enclosure and placing the eggs in different stages of incubation in different places in the enclosure, and thereafter driving the heated air by mechanical means at a predetermined speed about all of the eggs and driving same through and between the eggs in the more advanced stage of incubation, whereby the temperature of said eggs will be maintained at something less than 105° temperature, for the purpose specified.

"6. The method of hatching eggs by arranging eggs in various stages of incubation in an enclosure and placing the eggs in different stages of incubation in different places in the enclosure, and thereafter driving the heated air by mechanical means at a predetermined speed about all of the eggs and driving same through and between the eggs in the more advanced stage of incubation, whereby the temperature of said eggs will be maintained at something less than 105° temperature, said eggs in the more advanced stage of incubation being raised in tilted position, for the purpose specified."

Attention is called to the fact that these claims, although much narrower than original claims 1 and 25, first submitted, still called for stage incubation and forced draft, but the stage incubation called for was of a type wherein the eggs in different stages of incubation were located at different levels and the forced draft circulated the heated air at a predetermined speed adapted to the eggs in various stages of incubation. The temperature of maintenance of the eggs, *i. e.*, below 105°, was specified in claims 3, 4, 5 and 6 and in claim 3 there was a limitation placed on the temperature at which the eggs could be maintained at a maximum of 105° and a minimum of 100°. It should be

here noted that although the patent specifically states that in accordance with the Smith process, the eggs are to be maintained at a temperature of between 105° and 100° F., neither the Smith commercial machine nor the Snow machine operate at a temperature above 100° F. The temperature maintained in these machines is above 99° and below 100°. Attention is also called to the fact that in the second group of claims submitted and above quoted, an attempt to differentiate the Smith process from the references was made by including in the claims the words, "at a predetermined speed."

In the argument accompanying the amendment, attention was called to the added limitations in the claims and the importance thereof, in the judgment of applicant's solicitors.

In the next or fourth official action dated May 3, 1917, paper No. 8 (R. 911), all of the six substituted method claims, in the second group submitted, were rejected in paragraphs reading as follows, to-wit:

> "Claims 1 and 2 are rejected on each of Morgan, Perkins, Boyd and Stulik, in view of Winkler. In each of the first four references, the temperature of the heated air in the column is kept the same by the thermostat that controls the heater which drives the air, so that the speed of driving the air is predetermined by adjusting the thermostat. Winkler suggests the eggs in different stages of incubation being in different levels.
>
> "Claims 3, 4 and 5 are rejected in the same manner as claim 1, in view each of Endemann, Jones, *et al.*, and Verna, suggesting the mechanical means.
>
> "Claim 6 is rejected on Perkins, in view of Winkler, Perkins suggesting the tilting of some of the eggs."

Then after new attorneys had been appointed for prosecut-

ing the applications, paper No. 9 (R. 913), a fourth amendment was submitted, filed June 28, 1917, paper No. 10 (R. 915). In this fourth amendment, the applicant cancelled claims 1 to 8, inclusive, then standing in his application, which included *all* of the second group of six method claims last previously inserted in the case, and he substituted three new method claims. The third group submitted, read as follows, to-wit:

"1. The method of hatching a plurality of eggs in different stages of incubation by subjecting all of said eggs to heated air and by supplementing the natural draft of the heated air with the forced draft to increase the velocity of heated air about the eggs without changing the temperature of heated air, whereby the units of heat will be carried from the eggs in the more advanced stage of incubation to those in a less advanced stage.

"2. The method of hatching a plurality of eggs in different stages of incubation by subjecting all of said eggs to heated air and by using a forced draft to increase the velocity of heated air without changing the temperature, whereby the units of heat will be carried away from the eggs in the more advanced stage of incubation to those in a less advanced stage, for the purpose specified.

"3. The method of hatching a plurality of eggs in different stages of incubation by subjecting all of said eggs to heated air and by supplementing a draft produced by mechanical means to increase the velocity of the air without increasing the temperature thereof whereby the units of heat will be carried from eggs in more advanced stage to those in the less advanced stage of incubation."

Upon inspection of these so substituted method claims, in the third group submitted, and by comparison with the first and second groups of method claims, which had been previously submitted, it will be seen that the third group submitted above quoted were more limited than the first group submitted and in certain respects they were more limited than the second group submitted. Each of the third group of claims still called for a method of hatching eggs which included stage incubation and forced draft but each claim also called for the natural draft of the heated air to be *supplemented* by a forced draft to increase the velocity of the air "whereby the units of heat will be carried from the eggs in the more advanced stage of incubation to those in the less advanced stage." The amendment was accompanied by an argument, said to be a repetition in substance of an oral one previously made by the applicant's attorneys with the Examiner, wherein the forced draft was emphasized and stated to be the "essential feature of the invention," and further stating that the applicant seemed to be the first to employ a *forced draft.* The attorneys' exact words were:

> "A great many experiments have been made to provide a natural draft that would equalize the temperature, but the best that could be accomplished disclosed a difference of about 15 degrees between the upper and lower part of the egg chamber, whereas when a forced draft was employed a substantially equal temperature was maintained throughout the chamber, showing that the *essential feature of the invention* is a forced draft and applicant seems to be the first to employ a forced draft."

On the next or fifth official action, dated June 30, 1917, paper No. 11 (R. 921), the said third group of method claims

1, 2 and 3, were all rejected on references. Most of this action is here quoted:

> "Attention is called to Figs. 1 to 5, inclusive, and 7 of Koons, 916,454, March 30, 1909, in which if the pipes 54 were omitted there would be a natural draft around 12, through 8 and out of the egg chamber as indicated by the arrows in Fig. 1. The use of the pipes 54 adds a 'forced draft' that increases the speed of the air but does not heat the air in 1. To arrange the eggs on the trays so that the air will first strike the eggs in the more advanced stage and then those in the less advanced stage is suggested by Winkler.
>
> "Claims 1, 2 and 3 are rejected as explained, and also on Scott, 709,650, of September 23, 1902, class 119/140, having a 'forced draft' produced by 22 in view of Winkler, suggesting using a plurality of trays to produce the mode of operation in the last three lines. These claims are also rejected on Boyd in view of each of Scott and Koons suggesting connecting the part k of Boyd to the heater to get a forced draft and of Winkler suggesting putting the more advanced eggs in the lower tray.
>
> "In claim 3, mechanical means does not distinguish from the structure of the references. *Even if it did, there would be no invention in a method claim in substituting a fan for the draft forcing means of Koons and Scott.*"

Then the fifth or final amendment was filed on Feb. 26, 1918, paper No. 12 (R. 925). The descriptive portion of the specification was amended, line 23, page 4, by insertion of the following matter therein:

> "The outlets 28 for the release of foul air are made of such restricted capacity as to prevent the undue es-

cape of moisture. It is possible to limit the openings and so conserve the moisture by reason of the vitalizing effect of the power driven current upon the body of the air within the chamber."

This amendment to the descriptive portion of the specification was supported by a supplemental oath of the applicant. It should be noted that this was the first time during the prosecution of the application that any word had been said about the vitalizing effect of the power driven current.

In the said fifth or final amendment, the third group of method claims which had been previously submitted and then stood as claims 1, 2 and 3, were cancelled and a final fourth group of method claims were substituted. These substituted claims were numbered 1, 2 and 3, and they matured into claims 1, 2 and 3, respectively, of the patent. They need not be here quoted.

Also submitted with this last amendment was an argument for the allowance of the three method claims emphasizing the power driven current of applicant's and the *vitalizing effect of the power driven current* on the eggs placed at different levels.

It should be noted that claim 1 of the patent submitted in the amendment, dated June 30, 1917, and above last referred to, is *narrower,* in many material respects, than *any* previous claim that had been submitted, rejected and cancelled and which called for the two features of stage incubation and forced draft. Claim 1 of the patent calls for the method of hatching to be carried out "in a closed chamber having restricted openings of sufficient capacity for the escape of foul air without undue loss of moisture." This is a limitation not found in the previous method claims submitted. It is a recognition of the importance of vitalizing

the air during each cycle of air movement so that the vitalized air will be carried first to the eggs in the advanced stage of incubation where most needed. Then claim 1 of the patent further calls for "applying a *current* of heated air." Air moving in "current" form had not been specified in any of the earlier submitted claims. Here was a distinct limitation put in claim 1 of the patent to distinguish Smith's air movement from other forms of air movement, such, for example, as mere agitation or general mixing and diffusion. In other words, the word "current" was obviously placed in the claim as a *limitation* to preclude it from covering all forms of air movement caused by *forced draft* as now contended for by petitioner. The "current" of claim 1 of the patent was further limited as being "of sufficient velocity to circulate, diffuse and maintain the chamber at substantially the same temperature whereby the air will be vitalized, the moisture conserved and the units of heat will be carried from the eggs in the more advanced stage of incubation to those in a less advanced stage for the purpose specified." This limitation in the claim *conclusively* precludes the patentee from an interpretation of the claim to cover merely forced draft and stage incubation when the previously submitted, rejected and cancelled claims are considered and the vitalizing effect of the current moving first to the eggs in the advanced stages and then to those in the less advanced stages is thoroughly understood as has been previously brought out in this brief in section 1 of this chapter.

From the above consideration of the file-wrapper record of the patent in suit, it will be seen that Smith began the prosecution of his application for patent by seeking to secure a claim or claims broad enough to cover merely stage incubation and forced draft; that such claims were denied him by the Patent Office; that he then limited his method

claims in one respect after another to distinguish the same from the references; that he made no progress in securing the allowance of method claims until after three successive groups of method claims calling, among other things, for stage incubation and forced draft, had been submitted, rejected and cancelled and until he submitted the closely limited method claims of the patent in suit; that these claims, of which claim 1 of the patent in suit is the broadest, were only allowed because *Smith gave up his contention for a claim broad enough to cover merely stage incubation and forced draft* and limited the said method claims to a *current* of heated air so circulated as to cause the air to be vitalized and to cause this vitalized air to move first to the eggs in the more advanced stage of incubation and then to the eggs in the less advanced stage of incubation.

Conclusion From the File-Wrapper of the Smith Patent in Suit.

In view of the conduct of the patentee, Samuel B. Smith, in the handling of his application which matured into the patent here in suit, as established by the file-wrapper record of that patent above considered, it is perfectly obvious that, under the well settled law of the subject, said Smith, his heirs, legal representatives and assigns, are now *estopped* from receiving any interpretation of said relied upon claim 1 of the said Smith patent here in suit, which would accord thereto a meaning as broad or broader than the claims which had been presented by him in his application, rejected on references, and then eliminated by him.

In other words, the said patentee, Samuel B. Smith, his heirs, legal representatives and assigns, are, under the long settled law of the subject, *estopped* from receiving an inter-

pretation of said claim 1 of the Smith patent in suit broad enough to cover merely stage incubation and forced draft in an egg hatching method.

See *Walker on Patents* (6th Ed.), Section 237, and the cases cited in footnote 282, page 323 of that book.

Especial attention is called to the following cases, to-wit:

Shepard vs. Carrigan, 116 U. S. 593, 598;

Roemer vs. Peddie, 132 U. S. 313-317;

Morgan Envelope Co. vs. Albany Paper Co., 152 U. S. 425;

Hubbell vs. United States, 179 U. S. 77;

Kokomo Fence Machine Co. v. Kitselman, 189 U. S. 8;

Webber Electric Co. vs. E. H. Freeman Electric Co., 256 U. S. 668;

I. T. S. Rubber Company vs. Essex Rubber Company (Nov. 22, 1926), 272 U. S. 429-*443, 444;*

Smith, Administratrix vs. Magic City Kennel Club, Inc., et al., 282 U. S. 784.

The file-wrapper record of the relied upon claim 1 of the Smith patent in suit is not correctly stated in the petitioner's brief and none of the decisions of the courts cited therein give any occasion to change or modify what has been, or will be said about this file-wrapper record in this brief.

The existence of the file-wrapper estoppel against the patentee, Samuel B. Smith, above pointed out, has been recognized by the courts in numerous of the prior adjudications of this same claim 1 of said Smith patent, 1,262,860. For example, this remark applies to the following cases:

Buckeye Incubator Co., et al., vs. Petersime, C. C. A. 6th, 19 F. R. (2) 721;

Buckeye Incubator Co., et al., vs. Blum (decision by Judge Westenhaver), 17 F. R. (2) 456;

Buckeye Incubator Co., et al., vs. Blum, C. C. A. 6th, 27 F. R. (2) 333;

Buckeye Incubator Co., et al., vs. Hillpot, D. C. D. N. J., 22 F. R. (2) 855;

Buckeye Incubator Co., et al., vs. Hillpot, C. C. A. 3rd, 24 F. R. (2) 341.

Special attention is called to what Judge Westenhaver said in the Blum case on pages 459-461 of the reported decision, 17 F. R. (2) 456; to what the trial court, Judge Bodine, said in the Hillpot case on page 857 of the reported case, 22 F. R. (2) 855; and to what the Circuit Court of Appeals for the 3rd Circuit said on page 344 in the Hillpot case, 24 F. R. (2) 341.

The holdings of said courts in said Petersime, Blum and Hillpot cases as to the true meaning of the relied upon claim 1 of the Smith patent in suit will be specifically pointed out in the next or fourth section of this chapter of this brief.

The courts have no power to make for a patentee a new claim of broader scope than any of the relied upon claims contained in said patentee's patent:

Keystone Bridge Co. vs. Phoenix Iron Co., 95 U. S. 274;

Burns vs. Meyer, 100 U. S. 671;

Railroad Company vs. Mellon, 104 U. S. 112;

White vs. Dunbar, 119 U. S. 47-52;

Hubbell vs. United States, 179 U. S. 77;

I. T. S. Rubber Company vs. Essex Rubber Company (Nov. 22, 1926), 272 U. S. 429-443, 444;

Houser, et al., vs. Starr, C. C. A. 6th, Feb. 14, 1913, 203 F. R. 264;

and practically all of the other cases in the group of U. S. Supreme Court cases last previously cited.

The meaning of claim 1 of the Smith patent at the time of the grant of the patent, as determined from the file-wrapper record has now been made clear. It should be noted, however, that Smith's own prior public usage, proven to have taken place at Cleveland, Ohio, in 1913 and 1914, over two years before his application for patent was filed, was not known to the Patent Office officials at the time when the Smith patent was granted, or at any time while that application was pending, so far as can be ascertained from the file-wrapper record of the patent. It is a moral certainty that this prior public usage was not known to the official Examiners who acted on the Smith application. If reliable proof of that prior public usage had been before the said Patent Office officials, while the Smith application was pending, the probability is that the method claim 1 of the Smith patent would never have been granted. The meaning of the claim will, therefore, have to be further qualified to distinguish from the said proven prior public usage by Smith and to also distinguish from all the newly discovered prior patents and publications, certain of which have hereinbefore been identified and referred to and which *were not cited* as references on the file-wrapper record of the said Smith patent.

We will next consider a few of the prior adjudications of this same claim 1 of the Smith patent here in suit.

Section 4. The True Meaning of Claim 1 of the Smith Patent No. 1,262,860, as Heretofore Determined by the Courts.

The Prior Adjudications of this Smith Patent 1,262,860, in suit are Identified in the Appendix.

The prior adjudications involving claim 1 of the Smith patent in suit and rendered prior to the decision of the Circuit Court of Appeals for the Eighth Circuit in the instant case, and prior to the decision of the Circuit Court of Appeals for the Ninth Circuit in the Waxham case are identified in the Appendix to this brief with sufficient comment to make clear which thereof are pertinent and which thereof are non-pertinent to the determination of the true meaning and scope of the relied upon claim 1 of said Smith patent.

By reference to the statements there made, it will be seen that the only prior adjudications of any weight for the determination of that question are those rendered in the Petersime case, the Blum case and the Hillpot case. All of these cases reached the proper Circuit Courts of Appeal, and as to the expression "cases" here used, it is intended to include the decisions of the trial court and the decisions of the Circuit Courts of Appeal.

The Petersime Case.

The case was entitled, *Buckeye Incubator Co., et al., vs. Petersime, et al.,* and brought in the Southern District of Ohio. The trial was before District Judge Hickenlooper who gave an oral decision thereon dated June 30, 1926, and filed a written memorandum September 17, 1926. The pat-

ent was declared valid but not infringed. This decision was not reported.

In the Circuit Court of Appeals for the Sixth Circuit, this case bears the same title. The hearing was before Circuit Judges Dennison, Mooran and Knappen, and the decision of that Court was dated June 10th, 1927, and reported in 19 F. R. (2) 721. The trial court was affirmed.

In Judge Hickenlooper's decision, it is not stated what particular claims of the Smith patent were there relied upon but, in the decision of the Sixth Circuit Court of Appeals, it is stated that the method claims 1, 2 and 3 of said Smith patent were in issue.

In the early part of Judge Hickenlooper's decision, he indicated that, although he was constrained by the previous adjudication of this patent in an earlier case within his own Sixth Circuit Court of Appeals, to treat the said patent as valid, he would nevertheless express his own individual feeling on that point; and he said:

> "I have had considerable difficulty in determining the exact element of patentability in the Smith patent, which raises the discovery beyond the mere exercise of mechanical skill to the dignity of invention."

He then goes on to state the ends to be accomplished by the hatcher of eggs and then makes the following statement:

> "What Dr. Smith seems to the Court to have done was simply to draw from the prior art recognized devices for accomplishing these desired aims, or necessary aims; and he seems to me to have done this in the same manner that any skilled heating and ventilating engineer might have done it, or as any mechanic skilled in the heating and ventilating art might have done it. And in saying this, I realize that I draw no distinction between the incubating art as a separate art and the heat-

ing and ventilating art. This distinction seems to me not well founded."

Judge Hickenlooper then went on to consider certain of the prior patents introduced into that case and then stated (page 4 of the decision) that if the invention is claimed as a process it must be strictly limited to the actual disclosure made by the patentee. He also states (page 3) that the patent might be sustained upon the hypothesis "that the element of invention, the discovery which Dr. Smith made in this case, had primarily to do with the order of sequence in which the heated air was applied to eggs in the various stages of incubation; * * *."

Although Judge Hickenlooper did not specifically describe the structure of the Petersime machine, it is described in the third paragraph of the decision of the Sixth Circuit Court of Appeals, 19 F. R. (2) 721, 722, as follows:

> "The Petersime device is an open box without partitions, in which there are egg trays of different sizes arranged in a drum. The heated air is taken in at the bottom of the cabinet and rises primarily because it is heated. There are inlets for air at the bottom and outlets at the top. The air in the drum is agitated by a slow moving stirrer, but there is no defined current created by the agitation, that drives the air first upon the eggs in the more advanced stage of incubation, although it is admittedly so mixed that the heat units from those eggs are diffused throughout the entire drum. There is a thorough mixing of the air, but no application of defined currents."

To make clear the structure and operation of the Petersime incubator involved in the Petersime case, there was introduced into evidence at the trial of the instant case a

copy of Petersime patent No. 1,562,787, of date Nov. 24, 1925, marked "Defendants' Exhibit V" (R. 835-842).

By reference to that patent, it will be seen that Petersime there illustrates and describes an incubator, wherein there is a rotary drum which contains the egg trays and a fan or agitator of such structure and so mounted that it has horizontal blades, which rotate around the egg containing drum somewhat after the manner of the stirrer of an ice cream freezer. Judge Hickenlooper dismissed the bill of complaint for non-infringement.

Referring to the Circuit Court of Appeals decision in the Petersime case, the Court clearly brings out the fact that the appellees contended for the same broad meaning of claim 1 of the Smith patent as contended for in the instant case. The following quotation is taken from the said reported decision, page 721:

> "In the advanced stage of incubation, eggs generate and emit heat. They also require more oxygen than eggs in the earlier stages. Proper incubation must take into account the disposition or diffusion of this emitted heat, the carrying off of the carbon dioxide further emitted from the further advanced eggs, and the supplying of the additionally needed oxygen to those eggs, without undue loss of the requisite moisture and uniformity of temperature. Smith *claims* that his invention *covers any process of applying heated air to eggs at different stages of incubation whereby these essential steps are effected.*"

Said Court on page 722, of the reported decision, makes it clear as to what it considered claim 1 of the patent covered:

> "The question is whether the broader phrase of claim 1, 'applying a current of heated air,' includes the agita-

tion of air, not in defined currents, but so that it will produce a diffusion of heat units resulting in uniformity of temperature.

"Looking to the language of the claims, as indeed to the device that Smith uses, it *would seem that he had in mind a process by which the warm air taken into the corridor would be currently directed, so as to strike first the eggs in the more advanced incubation,* take to them the additionally needed oxygen, and carry the heat units therefrom to other parts of the two compartments, thus effecting, in part, at least, a uniformity of temperature throughout the egg chambers. This interpretation, we think, is borne out by the specifications. They refer to a 'forced circulation of hot air,' to subjecting the eggs to a 'column of air,' to moving the eggs to a different position 'with reference to the forced circulation of hot air,' to forcing the air 'to pass between the different eggs' which will in effect 'act as a cooling medium' for the more advanced eggs, all of which contemplate a defined current of air by which certain eggs may be cooled and given the additionally needed oxygen, and others may be warmed by the heat units which the current carries from the more advanced eggs. *The file-wrapper history of Smith's patent tends to support the same conclusion.* This conception of a current of air driven in a definite or predetermined direction is different, we think, from the Petersime process, by which diffusion of heat units and uniformity of temperature is obtained by the slow stirring or agitation of the air in the egg chamber.

"Judgment affirmed."

It will be seen that the Circuit Court of Appeals in the

Petersime case interpreted claim 1 of the patent in almost identically the same manner as did the Circuit Court of Appeals for the Eighth Circuit in the instant case.

The Blum Case.

The title of this case before the District Court for the Northern District of Ohio, Eastern Division, is *Buckeye Incubator Co., et al., vs. Blum.* The decision, written by Judge Westenhaver, was dated Feb. 14, 1927, and is reported in 17 F. R. (2) 456. In his said decision, the bill of complaint was dismissed for non-infringement. Judge Westenhaver's decision is very instructive and should be read in full.

The title of this case before the Circuit Court of Appeals, for the Sixth Circuit, is *Buckeye Incubator Co., et al., vs. Blum.* It was tried before Circuit Judges Denison and Moorman and District Judge Anderson. The opinion was written *Per Curiam* and was rendered July 6, 1928, and is reported in 27 F. R. (2) 333. The decision of the District Court was affirmed.

Only claims 1 and 2 of the Smith patent were sued upon. The plaintiff in the Blum case made the same contention for the meaning of claim 1 of the Smith patent as has been made by the petitioner in the case at bar. This is shown in Judge Westenhavers decision on the case in the District Court where he states, 17 F. R. (2) 456, page 459:

> "Plaintiff contends that Smith's method and claim 1 are broad enough to include any hatching method whereby eggs in different stages of incubation are enclosed in the same incubator chamber, and air is so agitated that heat units given off by eggs in the advanced stage will be diffused throughout the chamber and around eggs in a less advanced stage. Defendant,

on the other hand, contends that claim 1 calls for a process only, which requires the application of a current of heated air, more or less controlled, first to eggs in the advanced stage, and does not include merely stirring or agitating air, even though by so doing the temperature is kept reasonably uniform, regardless of the varying stages of incubation."

From this quotation it will be seen that the plaintiff in the Blum case, like the petitioner here, contended that claim 1 of the Smith patent was broad enough to cover a hatching method including any type of stage incubation and forced draft.

Judge Westenhaver, on page 459 of his reported decision, makes clear what the structure of the Aero incubator used by the defendant in the Blum case was. He states that, "In operating the three-stack incubator, all the eggs are not set at the same time, but one stack at one time and the others at successive intervals, so that the eggs in the same chamber are in varying stages of incubation." He then goes on to say:

> "Defendant's device does not have a fan to create air currents and circulate them through the stacks of eggs. It does not have a corridor separated from the stack of eggs *by partitions* with openings under or over the same between the corridor and the egg chambers. It does not drive or force air over heated coils downward through the central corridor and up through the column of egg trays. It has all stacks of eggs in the same chamber, not in chambers separated one from the other by *partitions* and corridors. The incubator is equipped with a pulley driven shaft disposed axially through the chambers and egg stacks. On this shaft are wired boards 40

inches long and 4 inches wide. One of these boards is placed at each end and one between each stack of eggs. The boards are disposed at right angles to each other, said by defendant to be merely for the purpose of properly balancing their weight. The shaft is driven at a moderate rate of speed, so that the outward tips of the revolving boards move only at the rate of 2,000 feet per minute, whereas the outward tips of the fan blades of plaintiff's 18-inch fans revolve at a rate of more than 11,000 feet a minute. The paddles of defendant's device revolve at right angles to the shaft, and are not disposed at an angle to the egg shafts, so that the air is not driven laterally against the eggs, whereas the fan blades of plaintiff's device are disposed at the usual angle appropriate to drive air in a *current* on the principle of a forced draft. These are the main differences in construction and principle of operation between the two devices."

From the above description, of the Aero incubator, it is clear that the incubator used by Blum, sometimes hereafter called the Blum incubator, had a casing in which there were several spaced tiers of superimposed egg containing trays; that there was a drive shaft running horizontally through this casing and which shaft had fixed thereto, in the spaces between the different tiers or stacks of egg trays, boards 40 inches long and 4 inches wide which acted as agitators or paddles for stirring the air to keep the temperature of all the eggs in the incubator approximately the same. These paddles in the Blum incubator revolved at the rate of 2,000 feet per minute at their outer tips. The type of air agitation used by Blum was not materially different than that used by respondent, as will later appear in Chapter IV of

this brief devoted to "Non-Infringement."

After giving the above quoted description, Judge Westenhaver made the following further statements, page 459 to 460, of the reported decision:

> "It is defendant's contention that currents of air, as that term is and must be understood in claim 1, are not found in his method. Defendant's device was operated under my observation at this hearing. Undoubtedly the air within the incubator chamber is in commotion. It is not at rest in any part of the chamber. Obviously, as the paddles revolve, the air in front of them is compressed, and an area of lower pressure is produced behind them. The most direct effect is to drive the air against the sides and top and bottom of the chamber as well as to draw it towards the areas of low pressure. It may be accurately described as a stirring and churning operation. It agitates the air, but does not drive or force it in any uniform or ascertainable direction. If adequate uniformity of temperature is obtained, it is accomplished only in this manner. In this sense and manner only can it be said that heat units are carried from eggs in the advanced to eggs in a less advanced stage of incubation. If claim 1 calls for a current of air forcibly created and driven against the eggs in any definite or ascertainable manner or direction, then defendant's device does not appropriate that step. It is not capable of creating or directing such a current or functioning in accordance with that principle.
>
> "These considerations bring us to the crucial question: What is meant in claim 1 by the term, 'applying a current of heated air'? This meaning must be extracted from the ordinary and usual meaning of the words employed, unless, indeed, the patent specifications or the

Patent Office proceedings have affixed thereto another and different meaning. In New Standard Dictionary, 'current' is defined as 'a continuous movement in the same direction, as of a fluid; flow, stream; also the fluid that is in motion; as a current of air or water.' As thus defined, Smith's method produces and applies a current. If this definition is accepted, it must be found that defendant's method does not meet its requirements. There is no continuous movement of air in the same direction, or in any definite or ascertainable direction. It is air in commotion or agitation rather than air in movement in a given direction.

"Turning to the specifications, we find this definition or meaning more strongly emphasized. It is said: 'There is a forced circulation of hot air through the chamber.' It is pointed out that the eggs will be placed in a horizontal plane, 'and after the eggs have been subjected to the circulation of hot air for a predetermined time * * * they will be moved to a different position with reference to the forced circulation of hot air.' The purpose is to force hot air to pass through the eggs in the more advanced stage of incubation and act on them as a cooling medium and carry the heat units therefrom toward the cooler eggs. It is further said: 'The speed or velocity of the circulating air should be such as to carry the heat away from the eggs in the later stage of incubation.' And still further: 'The method contemplates the application of hot air circulating in a column with such speed as to keep the temperature substantially uniform and so arranging the eggs that the fresh eggs are placed at one point in the column of air and held in a horizontal plane until they reach a predetermined stage of incubation, and then put at a dif-

ferent point in the same column of air and kept in planes inclined to the horizontal, and thereafter placed at such a point in the column of air that the forced draft of air acts to hold the eggs at a uniform temperature.'

"Thus we see that Smith himself affixed a meaning to the words 'applying a current of heated air.' The various expressions used are 'a forced circulation of hot air,' or 'speed or velocity of the circulating air,' or 'a column of air,' or 'a column of eggs.' In brief, the eggs are put in a column, the air is forced and circulated in a column through those eggs, and is applied first to eggs in an advanced stage of incubation, and later to those in a less advanced stage. In defendant's method there is no forced circulation of hot air; much less is there any column of hot air, with eggs disposed therein in different stages of incubation. In my opinion, it is not possible to procure either a current or column of heated air, functioning in the way pointed out in Smith's patent, without means for creating a forced draft, and without means for restricting more or less the channels through which it is driven. *Smith's method cannot be practiced without these means.*"

Judge Westenhaver next takes up the file-wrapper record of the Smith patent in suit and traces some portions thereof relating to the relied upon method claims 1 and 2 thereof. This appears on pages 460 and 461 of his said decision as reported and reads as follows:

"Turning to the file wrapper history of Smith's patent, we find these conclusions much strengthened. His application, as originally filed contains four method claims. Claim 1 thereof was in these words:

> 'The method of hatching eggs by arranging the eggs in a column and applying heated air forced about the eggs, the heated air being adapted to the eggs in various stages of incubation.'

"This as well as the other three method claims was rejected. It was then amended by inserting after the word 'column' the words 'of various stages of incubation' and by striking out the word 'forced' and by inserting the word 'impelled.'

"After repeated rejections of all method claims, new method claims were again submitted. Of these claim 2 is in these words:

> 'The method of hatching eggs by arranging in one chamber eggs in various stages of incubation, the eggs in different stages of incubation being in different parts of said chamber, and applying heated air driven at a predetermined speed or velocity about all the eggs, whereby the heated air will be adapted to eggs in various stages of incubation.'

"This amended claim, as well as all other amended method claims, was again rejected. Later, after an oral hearing and the submission of evidence (relating to the Koons U. S. Patent, 916,454, of March 30, 1909), the more limited claims now in the patent were presented and allowed."

* * * * * * * * *

"These rejections and Smith's acquiescence are not without substantial weight. Even if it can be said that no definite limitation is thereby imposed, they certainly furnish light in determining what method or series of steps are defined in claim 1. *If claim 1, as originally presented, had been allowed, Smith might claim the con-*

struction now asserted, but perhaps at the risk of validity. If amended claim 2 had been allowed, Smith would be entitled to the construction now contended for, except only for the limitation of a predetermined speed or velocity. In the claim first submitted, he was seeking a claim covering eggs arranged in a column in various stages of incubation, with merely heated air forced or impelled about the eggs. In the later claim, he was seeking to cover eggs in one chamber in various stages of incubation, with heated air driven about all the eggs, plus a predetermined speed or velocity for the air. These claims were all rejected by the examiner, either because they were anticipated by the prior art, or because they *covered more* than Smith had actually discovered or invented. *He acquiesced in that rejection and accepted narrower claims.*

"Smith is not now entitled to have a construction which covers merely eggs in different stages of incubation in one chamber, with heated air applied to or forced about them. He made an effort to get claims broad enough to admit of this construction, and failed. He acquiesced in that rejection and accepted claims which called for the application of a current of air. This expression, whether we consider merely its normal meaning, or whether we determine its meaning from the disclosures of the specifications, or whether we determine the same from these repeated Patent Office rejections, must be held limited to a method which calls for the creation and driving by force of a current of air in some more or less definite or predetermined direction through a column of eggs arranged in an order which presents first to the current those in the most advanced stage. In my opinion, defendant has not appropriated this ele-

ment or step of claim 1, and is not guilty of infringement."

Judge Westenhaver then thereafter referred to three prior adjudications of the Smith patent, wherein these same claims were in issue, to-wit: His own decision in the Wolf case, the decision of Judge Hickenlooper in the Petersime case, and the decision of the Circuit Court of Appeals for the Third Circuit in the Cooley case, 17 F. R. (2nd) 453, wherein similar views to his own in the Blum case had been expressed as to the nature of the Smith invention, and he quoted from the said decision of the C. C. A. for the Third Circuit in the Cooley case, wherein that court, by Judge Woolley, after pointing out what Milo Hastings had done, described Smith's hatching method as follows:

> "He (Smith), too, set eggs in trays, arranged in tiers and enclosed them in a chamber, and he also provided artificially heated air by a motor-driven fan positioned at the top of the chamber, but he established an *air current and regulated its direction* by arranging the tiers of trays in two columns parallel with and separated from each other so as to form between them a central corridor, and placed *partitions or curtains* from the top to a short distance from the bottom of the tiers and *directed* the air current downwardly not through the eggs, but through the corridor where it mushroomed on the floor, spread beneath the tiers, ascended through the egg trays and escaped through definitely arranged air outlets. *By so controlling the current of heated air,* Smith claims, and we think correctly, that he is enabled to attain uniformity of temperature in its movement."

Then, shortly thereafter Judge Westenhaver ends up his decision with sentences which read as follows:

"That three different tribunals in different situations should be so impressed, is strong evidence of the soundness of my present conclusion."

* * * * * * * * *

"I still think that defendant's (machine) has many limitations and disadvantages. Be that, however, as it may, its method is not Smith's invention nor the method called for by the words in claim 1 'applying a current of air.' Even if Smith's invention is one of great merit, and his patent claims entitled to a liberal arrangement of equivalents, *it is not permissible* to give those claims a construction broad enough to include a method which does not use or apply *his current of air.*

"For the foregoing reasons, plaintiffs' bill will be dismissed at their costs."

From the above it will be seen that Judge Westenhaver in the Blum case took the same view of claim 1 of the Smith patent in suit as did the Circuit Court of Appeals for the Eighth Circuit in the instant case and as did the Circuit Court of Appeals for the Sixth Circuit in the Petersime case.

The Circuit Court of Appeals for the Sixth Circuit in the Blum case affirmed the decision of the trial court in a very short decision which, because of its importance, is here quoted (with the exception of the introductory paragraph). This decision is reported in 27 F. R. (2) 333.

"Counsel for appellant frankly concede that there should be an affirmance, unless we are prepared to modify to some extent our holding in the Petersime case. In that opinion some acceptance was given to the theory that there is no infringement, unless the circulating air strikes first those eggs which are in the last stages of incubation and are generating the greatest heat. In

considering a construction where the main current of air is brought in from outside, and in thinking of only the first circuit which this air makes, that thought seems applicable.

"Counsel now point out, with much force, that in a case where the air does not come in from the outside in large volume, and that in any case during the circuits after the first one, no one point in the circuit gets the air ahead of any other point, in an absolute way. Which point gets it first depends upon where we consider the circuit to begin. *We think we need not consider the effect of this defect in the reasoning—if it is a defect—of our former opinion.* The result in that case rests also upon the theory that the patent contemplates a distinct, or at least an identifiable, current of air, flowing like a stream in one direction. Upon reconsideration, we are satisfied that this theory is correct. Whether there is such a fairly distinct current, as distinguished from the general agitation employed by the defendant here, and in less degree by the defendant in the Petersime case, is said to be of no practical importance in achieving the successful result. Perhaps so; and yet dependence upon that theory, in order to sustain the patent, is required, *both by the proceedings in the Patent Office and by the prior art, including Smith's too old public use.* Smith learned or knew he must differentiate in this respect in order to get his patent.

"The decree below is affirmed."

The decision by the Sixth Circuit Court of Appeals in the Blum case (above quoted) is one of the decisions alleged to be in conflict with the decision by the Circuit Court of Appeals in the Eighth Circuit in the instant case. From a

consideration of the above decision in the Blum case, it will be seen that the C. C. A. for the Sixth Circuit did not take the position that claim 1 of the patent was not limited to the movement of the air first to the eggs in the advanced stage of incubation and then to the eggs in the less advanced stage. It avoided passing on this question, merely stating, "We think we need not consider the effect of this defect in the reasoning—if it is a defect—of our former opinion." The Court then went on to base its decision on the grounds that the patent contemplates a distinct or at least an identifiable current of air, flowing like a stream in one direction, and held that in the Blum machine there was no such current. The Circuit Court of Appeals in the instant Snow case used as one of the grounds for finding non-infringement of claim 1 that the respondent Snow did not have the current of the patent claim. We quote from the Eighth Circuit Court of Appeals decision in the instant case, 70 F. R. (2) 564, page 568:

> "The conception and operation of appellee's device is a *column of air* passing through the column of eggs in a definite direction—from eggs in advanced stages to those less advanced. In appellants' device, the conception and operation is a *wide, general diffusion of air kept* moving around all of the eggs without relation—as to direction—to the location of eggs in the particular stages of incubation.
>
> "Thus differing in both essentials of the patent—arrangement of eggs and *air current*—from the device disclosed by the patent, appellants' device is not infringing."

In other words, the decision of the Circuit Court of Appeals for the Sixth Circuit in the Blum case is in accord with

the decision of the Circuit Court of Appeals for the Eighth Circuit in the instant case. It is also in accord and not in conflict with its own prior decision in the Petersime case.

The Hillpot Case.

The title of this case before the District Court for the District of New Jersey is *Buckeye Incubator Co., et al., vs. Hillpot.* The decision, written by Judge Bodine, was dated Aug. 4, 1927, and in said decision, claims 1 and 2 of the Smith patent 1,262,860, were declared non-infringed. This decision is reported in 22 F. R. (2) 855.

The title of this case before the Circuit Court of Appeals for the Third Circuit on appeal, is *Buckeye Incubator Co., et al., vs. Hillpot; Hillpot vs. Buckeye Incubator Co., et al.* It was heard before Circuit Judges Buffington, Woolley and Davis. The opinion was written by Judge Woolley and was rendered Feb. 10, 1928, nearly five months before the decision by the Circuit Court of Appeals of the Sixth Circuit in the Blum case. It is reported in 24 F. R. (2) 341. The trial court was affirmed.

Claims 1 and 2 of the Smith patent 1,262,860 here in suit were in issue. Hillpot brought a counterclaim against the plaintiffs for infringement of certain claims of patents owned by Hillpot. The discussion as to the counterclaim may be disregarded.

In the District Court decision, Judge Bodine, after calling attention to the prior decisions on the Smith patent, held that the file-wrapper record of the Smith patent limited the meaning of claim 1 to the passing of air currents through the eggs in columns in a given direction from the eggs in the more advanced stages of incubation to those in the less advanced stages. He also pointed out that stage incubation

as disclosed in the Winkler patent 286,756 of Oct. 16, 1883, was old and it was only for a very specific interpretation that Smith could maintain his patent, and that his method could not be broadened either beyond that of his machine shown or the claims made. As before stated, the process claims of the Smith patent were held not infringed by Hillpot.

In the Hillpot case before the Circuit Court of Appeals, 24 F. R. (2) 341, the Hillpot machine and its operation were described on page 343 of the reported decision, as follows, to-wit:

> "The respondent practiced three methods which may best be stated by describing the apparatus in which he pursued them. All had closed chambers, egg trays arranged in tiers and the tiers positioned apart with a corridor between, restricted openings for the escape of foul air, and motor-driven fans in close relation to coils of heated pipe. All this was Smith; *and it was what Smith had taken from the art.* Hillpot then adopted that one of *several prior art practices* of arranging eggs 'at different levels' in stage incubation by beginning at the top with trays of fresh cool eggs, and moving them down as, from day to day, incubation progressed and self-heat developed, and then filling their places with trays of fresh cool eggs until, when the tier was completed, the eggs in the bottom trays were in the more advanced stage of incubation and those in the top trays in the less advanced stage; that is, he had eggs variously positioned with varying temperatures, presenting the problem which confronted Smith when he made his invention. Hillpot then departed from Smith's preferred apparatus and method which, as disclosed in the specification, shown in the diagram and claimed in claim 4,

have the heating coils and motor-driven fan positioned in the corridor near the ceiling, with the result that heated air is driven down the corridor to the floor where it mushrooms and ascends first through the warm eggs and then through the cool eggs *when they are arranged in that order.* Hillpot in one structure placed the heating coils and fan in the corridor at the bottom of the chamber, in another in the corridor at the side of the chamber midway between the floor and ceiling, and in the third in the corridor near the top with superimposed baffle plates so that, in each instance (we shall assume), a column of heated air was driven to the top, there it mushroomed and descended through the two tiers, first through the trays of cool eggs and last through the trays of warm eggs, when they were so arranged. *If the Hillpot structures were in all other respects like the apparatus of Smith,* it will be observed that the air movement which Hillpot obtained by differently positioning the fans is a *precise reversal* of Smith's air movement."

From the above, it will be noted that the Hillpot machine was almost identical with the Smith machine with the exception that in the Hillpot machine, Hillpot placed his heating coils in slightly different position in the corridor and drove the air upwardly from his fans so that the air moved first to the eggs in the less advanced stages of incubation instead of first to the eggs in the most advanced stage of incubation. It will be noted that Hillpot used the shifting and grouped type of stage incubation of Smith where fresh eggs were set at the tops of the egg tiers and moved successively downwardly from day to day. There is, however, one very important difference between the construction and operation of the Hillpot machine and the construction and operation of

the Smith machine. Hillpot used no curtains or corresponding partitions between the corridor of his machine and the egg tiers. He did not confine the circulation of the air as did Smith by means of curtains or corridors. Attention is here called to the fact that, as will appear later in this brief in Chapter IV thereof entitled "Non-infringement," respondent does not use curtains or equivalent partitions between the corridor and the egg tiers in his machine. There are also many other distinguishing features, as will appear later, which make it clear that respondent's hatching method is much more remote from the Smith hatching method than was the Hillpot hatching method from the Smith hatching method.

Immediately after quoting claim 1 of the Smith patent, and emphasizing certain portions thereof by Italics, the Court states, page 342 of its decision:

> "The closed chamber was old; placing eggs in mesh bottom trays, stacking the trays in tiers, separating the tiers by passageways and arranging the trays at different levels of incubation, called stage incubation, were old; heat distribution effected by fan-driven heated air was old; and openings in the closed chamber for the escape of foul air (though not purposely restricted) were old."

Then going on, the Court said:

> "In the Cooley case, we found, as did both Courts in the Wolf case, that Smith got away from the old art and conceived a new method and provided a new apparatus, whereby heated air, instead of being driven hither and yon throughout the closed chamber, is driven *in currents* and made to circulate in the form of *columns of air in predetermined paths through columns of trays contain-*

ing eggs, which, at different stages of incubation, have different temperatures and which, therefore, exact different treatment, with the result that he met the demands of eggs of varying temperatures and supplied them with the temperature having a uniformity which all workers in the art had sought and which the hen alone affords to best advantage in nature. *If Smith did not do this, he did nothing."*

THE FALLACIOUS DICTUM IN THE HILLPOT CASE. On pages 344 to 345 of the reported decision, in the Hillpot C. C. A. case, the Court states:

"In Smith, after the air enters, there is no quick exit. The first requisite is a closed chamber and from this chamber no air, except foul air, escapes; the main body is retained in the chamber and is moved in cycles through the corridor and egg columns around and around, on and on, without any defined end. * * *

"But when, as in Smith, the air moves in cycles through corridors and tiers it makes no difference *after the first cycle* which way it moves through the egg trays, whether from bottom to top or from top to bottom, or whether it first strikes warm eggs or first strikes cool eggs, for in *every cycle after the first* the current when passing warm eggs will gather up their heat units and carry them to the cool eggs precisely as claimed and will in the same way produce that uniformity of temperature which is the thing sought by the art and achieved by the invention.

"But the issue of infringement in this case does *not turn in law* on such an interpretation of the claims alone or in fact on what, as thus far stated, seems a mere reversal of the steps of the patented method. It

turns on another fact, until now *purposely omitted,* and on its *consequent air movement."*

The above quoted statement is fallacious. In the first place, what is said in regard to it making no difference whether the air strikes the warm eggs first or the cool eggs first is obviously mere dictum. It was not essential to or used in the determination of the issues in that Hillpot case; and that fact was so stated by the Court, itself, in the last above quoted sentence.

In the next place, with all due respect to Judge Woolley, the statement is without foundation in fact. Judge Woolley states that the first requisite is a closed chamber and from this chamber no air except foul air escapes. The patent does not disclose a completely closed chamber. Smith's chamber has both fresh air inlets and used air outlets. No air could escape from the chamber without letting fresh air in to take its places. A completely closed chamber cannot be used for carrying out the Smith process for no fresh air could be introduced to vitalize the air moving to the eggs in a completely closed chamber. It is clear that Judge Woolley did not understand the importance of the air being vitalized before reaching the eggs in the advanced stages in accordance with the Smith method. At the commencement of every cycle of air movement in the disclosed Smith hatching method, fresh air and moisture is mixed in large quantity with that portion of the old air that is recirculated and this fresh air and moisture vitalizes all the air that is moved by the fans downwardly to the confining corridor and thence to the eggs in the most advanced stage of incubation in the lower portions of the egg tray tiers. This is for the particular purpose of carrying off the heat from the eggs in the more advanced stage of incubation; for carrying away the

carbon dioxide therefrom; and for supplying those eggs with the needed moisture and oxygen to prevent the chicks from dying *in embryo.* This has previously all been fully brought out in Chapter III, Section 1, of this brief, under the heading "The Patent Discloses that the Air is Never Recirculated in Closed Cycles—No Air is ever Recirculated in the Same Condition."

Immediately following the above mentioned fallacious dictum, the Court in the Hillpot case said:

> "Looking for the invention by reading the claims in the light of the specification and the file-wrapper history of the patent prosecution, one fixed and definite thing is disclosed, first, with reference to its presence in the apparatus and next with reference to its use in the methods. That is a 'corridor' between tray tiers, *and a corridor of a kind defined by its purpose.* The specification describes this by saying:
>
> > 'The invention comprises a walled chamber * * * subdivided longitudinally by two parallel rows of curtains 3 and 4 to provide a central compartment or corridor 5 and said (side) compartments 6 and 7' (tray tiers).
>
> "This physical arrangement is provided specifically to perform the function of *maintaining and directing the air current created by the motor-driven fan.* Without such an arrangement the air would *go where it pleased.* With such an arrangement the air, confined in a corridor partitioned from the tray tiers by curtains, will move in a *current or column* to the point of outlet which usually is at the bottom of the corridor, when, after mushrooming, it will pass below the tiers and ascend through the egg trays in a *current or column* because it is confined there by the same curtains that first pre-

vented its escape from the corridor. *The essence of the invention therefore is forced circulation of heated air in predetermined direction, or, stated differently, forced circulation of columns of heated air through columns of eggs.* There can be little doubt about that."

Then the Court next refers to the file-wrapper record of the Smith patent, and in relation thereto, makes the following statement on page 344 of the reported decision:

"The file wrapper clearly shows that Smith was forced at different stages of the patent prosecution so to limit his claims. Moreover, the file wrapper points to the fact that the 'curtains' make 'a tight closure between the corridor and the compartments'; it speaks of air passageways and vertically directed current; it contains ten references to 'forced circulation of heated air,' six to circulation effected by 'currents' of heated air, six to 'columns of heated air' through 'columns of egg trays,' and it contains *no reference* to any other kind of air circulation. Yielding to the demand of the Patent Office that the 'circulation of air should be included and defined,' Smith *acquiesced* in repeated rejections of his claims, proposed others and finally accepted those allowed, in each of which is embodied the conception of air movement by currents in defined channels. Turning to the specifications for light upon the claims, we find nothing there suggested in respect to air movement except by currents in predetermined directions."

The Court then concludes its decision by the following statements appearing on pages 344 and 345 of the reported decision:

"Turning to the specifications for light upon the claims, we find nothing there suggested in respect to air

movement except by *currents in predetermined directions.* With all this before him what did Hillpot do? He simply *omitted curtains.* He thus transformed the corridor of Smith into the passageway of the old art. Will this passageway without curtains sustain and direct the air current as it comes from the fan? Hillpot says it will not, and, what is more important, Smith does not say it will. With the Smith central idea of means and function for maintaining and directing an air current out of the Hillpot structures, Smith maintains that the true meaning of the 'current of heated air' as employed in the patent claims is merely a current 'created * * * with sufficient velocity to circulate, diffuse and maintain the air throughout the chamber' and urges that with the curtains off, the air in Hillpot is so diffused, generally and laterally, that it strikes each of the eggs again and again, and in doing so, it picks up some of the heat units from the warm eggs and carries them to the cool eggs, thereby effecting the desired uniformity of temperature. (It may be observed that it also carries them to other warm eggs.) In a word, he says that air '*agitation*' is the *essence* of his invention, yet *nowhere* in the file wrapper, specification or claims of the patent do we find *any reference to air agitation.* This silence, we surmise, is due to the fact that air agitation in the sense of indefinite circulation, diffusion, or churning was *prior art.* On circulation by defined currents alone Smith was awarded the patent. We cannot find circulation of that kind in any of the Hillpot structures. With curtains off, the tiers of trays present comb fronts to the passageway. When the warm air leaves the fan there is for a moment and for for a short distance a current, but as the force weakens

the current fades, and the body of heated air does not go to the opposite wall and mushroom but wanders in between each of the scores of trays and *goes where it pleases.* Instead of one *strong current moving* in one direction in *trunk form,* Hillpot has a trunk current only on leaving the fan; then it divides into a multitude of branches which follow no defined courses but only courses made by the least resistance. We are constrained to find that Hillpot did not infringe the claims of the Smith patent in suit.

"* * * The decree of the District Court is affirmed."

The decision of the Circuit Court of Appeals for the Third Circuit in the Hillpot case is one of the decisions alleged by petitioner to be in conflict with the decision of the Circuit Court of Appeals for the Eighth Circuit in the instant case. As has been previously pointed out, the Circuit Court of Appeals for the Eighth Circuit in the instant case held claim 1 of the Smith patent limited not only in respect to the passage of the air first to the eggs in the advanced stage of incubation and then to the eggs in the less advanced stage, but it also held the claim limited to the circulation of air by a current *moving in a column* through the egg trays. It is clear that the C. C. A. for the Third Circuit in the Hillpot case based its decision of non-infringement on one of the same identical grounds as did the C. C. A. for the Eighth Circuit in the instant case. It held the claim limited to the circulation of air by a current moving in a column through the egg trays. Although the C. C. A. for the Third Circuit is in disagreement with the C. C. A. for the Eighth Circuit as to whether or not claim 1 of the patent is limited in respect to the passage of the air first to the eggs in the more

advanced stage of incubation and then to the eggs in the less advanced stage, it will be seen that there is no conflict between the two decisions in the two different Circuits which makes any controlling difference for the determination of the question of infringement in the instant case.

In some respects the claim of the Smith patent is more narrowly interpreted in the C. C. A. decision of the Hillpot case than in any other decision involving the patent. It is made clear from the Hillpot decision that the only novelty in the Smith invention lies in the curtains which are used to confine and direct the air stream and to control the current movement of the air in the Smith process. The Hillpot case is to the effect that method claim 1 of the patent cannot be infringed if in a machine identically like that shown in the Smith patent, the curtains are eliminated. As this Hillpot case holds that claim 1 of the patent is limited to a current moving in a column through egg trays, the decision is also to the effect that the claim cannot be infringed by use of a machine wherein the circulation of air is chiefly in a horizontal direction, not in columnar form. Petitioner, in his brief, attempts to make it appear that the Hillpot case supports the view that the claim is open to an interpretation broad enough to cover merely stage incubation and forced draft. This is absurdly false. How far from the truth of the matter this contention is, will be fully appreciated when the Hillpot decision is fully understood.

The Waxham Case.

The title of this case before the Circuit Court of Appeals for the Ninth Circuit is *Waxham vs. Smith, et al.* The hearing was before Circuit Judges Wilbur, Sawtelle and Garrecht. The opinion was written by Judge Wilbur and was

rendered April 9, 1934. It is reported in 70 F. R. (2) 457.

Inasmuch as the Waxham case is now before this Court, on writ of certiorari to the Ninth Circuit, and as the hearing on the Waxham case is set concurrently with the instant case, very little need be said about the same.

The Court in the Waxham case did not attempt to determine the meaning of claim 1 of the Smith patent, as appears from the following quotation taken from page 459 of the reported decision:

> "In view of the decisions above referred to interpreting the Smith patent, we deem it *unnecessary* to further discuss either the nature or character of the invention or to describe the method of incubation covered by the Smith patent or *to attempt to define the limitations placed upon the patent* by these decisions which in that regard are not entirely consistent."

After quoting from the Robbins patent and pointing out the fact that the Robbins patent incorrectly described the air circulation in the incubator there disclosed, *i. e.*, an incubator similar to that used by Waxham, the Court, page 460, of the reported decision, made the following statement:

> "There is a definite and continuous current of air utilized in the Waxham device moving at a velocity not materially different from the speed of the air current in the Smith patent and accomplishing substantially the same purpose."

Whether the last above quoted statement is correct or not, we will not attempt to say, inasmuch as it does not concern us here. Attention is called to the fact, however, that the Circuit Court of Appeals for the Ninth Circuit had no opportunity to inspect the Robbins incubator in operation at the hearing to determine from its own observation the air cir-

culation in that machine. Whatever may be the air circulation in the Robbins machine used by Waxham, it is clear that there is no current in the Snow machine such as the current stated by the Court to have been present in the Robbins machine. At the hearing before the Circuit Court of Appeals for the Eighth Circuit in the instant case, one of respondents' incubators was set up and operated along side of one of the Smith commercial machines in the court room at St. Louis, Missouri, and the Court, after observing the operation of the two machines, *found as a fact* that there was no general current movement in respondents' machine. 70 F. R. (2) 564, p. 568.

> "In appellant's device, the conception and operation is a wide, general diffusion of air kept moving around all of the eggs without relation—as to direction—to the location of eggs in particular stages of incubation."

That in respondents' machine there is no general current movement of air of the type stated by the Ninth C. C. A. to be found in the Robbins machine, will more fully appear in Chapter IV of this brief under the heading "Non-Infringement."

The decision of the Circuit Court of Appeals for the Ninth Circuit was undoubtedly greatly influenced by the conclusion of that Court that in the Robbins machine there was the same type of current movement as in the Smith patent. The Ninth C. C. A. in the Waxham case, however, stands alone in its broad interpretation of claim 1 of the Smith patent. Its interpretation of claim 1 of the Smith patent is contrary to the interpretations given that claim by the C. C. A. Eighth in the instant case and by the C. C. A. Sixth in the Petersime and Blum cases and by the C. C. A. Third in the Hillpot case. It is an erroneous interpretation.

The statement made by the Circuit Court of Appeals for

the Ninth Circuit, on p. 460 of the reported decision, to the effect that the way in which the eggs were set and handled in the Robbins incubator was immaterial, is an incorrect and groundless statement. Smith's method for hatching eggs requires the eggs to be set and handled within the incubator as stated in the specification of the Smith patent; and this matter has been made clear in the previous portions of this brief and is emphasized in the decision of the Circuit Court of Appeals for the Eighth Circuit in the instant or Snow case.

When this obvious error in the decision of the Ninth Circuit Court of Appeals in the Waxham case is corrected, it is obvious that the holding of infringement in the Waxham case must be reversed.

The Court in the Waxham case could not have understood the effect of the large amount of fresh and moistened air admitted at the beginning of each cycle of air movement, in accordance with the Smith disclosure, to vitalize the air moving first to the eggs in the advanced stages of incubation. It also could not have understood the purpose or importance of the curtains in confining the air to compel it to take only a current movement in columns through the egg trays, as brought out most clearly in the Hillpot case. The importance of the curtains to carry the vitalized air first to the eggs in advanced stages and then to the eggs in the less advanced stages, so that when the type of incubation disclosed by Smith is used, adequate moisture and oxygen would be furnished to the eggs in the advanced stages and the heat and carbon dioxide driven off therefrom was not appreciated by the Court in the Waxham case. The Court did not consider or appreciate the limitations imposed on the Smith patent by the disclosure on the face of the patent or by the estoppels arising from the file-wrapper record, or by the

prior art. The decision in the Waxham case was in the teeth of all prior adjudications by Circuit Courts of Appeal wherein any careful effort was made to determine the true meaning and scope of claim 1 of the Smith patent.

Conclusion as to the True Meaning of Relied on Claim of the Smith Patent in Suit.

From the above, it will be seen that the patent disclosure, Smith's own prior public usage during the years 1913 and 1914, the prior patents and publications and the estoppels arising from the file-wrapper record, independently and co-operatively confine claim 1 of the Smith patent in suit to the restricted and limited meaning accorded thereto in the instant case by the Circuit Court of Appeals for the Eighth Circuit. All prior adjudications reaching Circuit Courts of Appeals, with the exception of the Waxham case, accorded claim 1 of the patent a meaning consistent with the meaning accorded thereto by the C. C. A. for the Eighth Circuit in the instant case. Of the cases reaching the Circuit Courts of Appeals and wherein careful effort was made by the Courts to determine the meaning and scope of claim 1 of the patent, each Court, other than the C. C. A. for the Ninth Circuit, held the claim limited in one or more of the same ways the claim was held limited by the C. C. A. for the Eighth Circuit in the instant case. The Circuit Court of Appeals for the Ninth Circuit in the Waxham case is obviously in error as to the meaning accorded to claim 1 of the Smith patent therein.

CHAPTER IV.

ARGUMENT CONTINUED.

NON-INFRINGEMENT.

Having made clear in Chapter III of this brief the true meaning and scope of the relied on claim 1 of the Smith patent in suit, if said claim can be treated as valid (which we deny), we are ready to consider the question of infringement.

Petitioner must admit that respondents do not infringe the claim, if this Court agrees with respondents' contentions that claim 1 of the patent is limited in any one of the respects specified in the paragraphs numbered 2, 3, 4, 5 and 6 appearing on pages 7-8 of this brief, under the heading, "Chapter II—Summary of Argument."

As to the structure of respondents' incubator and the method of hatching eggs carried out therein, there is agreement between respondents and petitioner in the following respects:

In respondents' hatching method, there is no movement of a column of air through a column of eggs. This is admitted by petitioner (p. 15 of petitioner's brief). Hence, if this Court agrees with the C. C. A. Eighth in the instant case and with the C. C. A. Third, in the Hillpot case, that claim 1 of the patent is limited to a method of hatching eggs wherein a column of air is caused to move through a column of eggs, there can be no infringement of the claim by respondents.

In respondents' hatching method, eggs at different stages of incubation are indiscriminately mixed throughout the incubating chamber so that the eggs in the advanced stages of incubation are not grouped together and the eggs in the

less advanced stages are not grouped together, but on the contrary, the eggs in the advanced stages are "sandwiched" between the eggs in the less advanced stages and vice versa. The eggs after once being set in the incubator are never shifted or moved from one position to another in the incubating chamber until they are ready to hatch. This is admitted by petitioner (see p. 13 of petitioner's brief). Hence, if this Court agrees with the C. C. A. Eighth in the instant case, that the claim is limited to cover only a hatching method wherein a special type of stage incubation is used including the shifting of eggs from one position to another successively as the incubation of the eggs progresses or that the claim is limited to cover only a hatching method wherein a special type of stage incubation is used including grouping or locating the eggs in the earlier stages of incubation together in one portion of an incubating chamber and grouping or locating the eggs in the later stages of incubation together in another portion of the same chamber, there can be no infringement of the claim by respondents.

In respondents' hatching method, no curtains or equivalent partitions are used. This is admitted by petitioner (pp. 53 and 55 of petitioner's brief). Accordingly, in respondents' method, air circulated in a chamber containing eggs is not confined to travel in definite paths by means of curtains or equivalent partitions. Hence, if this Court agrees with the C. C. A. Third in the Hillpot case, that the claim is limited to cover only a hatching method wherein air circulated in a chamber containing eggs is confined to travel in definite paths by means of curtains or equivalent partitions, there can be no infringement of the claim by respondents.

In respondents' hatching method, there is no movement of the air first to the eggs in the advanced stage of incubation and thence to those in the less advanced stage of in-

cubation. This fact is not denied in the petitioner's brief and it is practically admitted by what is there said on pages 13 and 24 as to the way in which respondents set and hatch eggs. Hence, if this Court agrees with the C. C. A. Eighth in the instant case and with the C. C. A. Sixth in the Petersime case and with the District Court in the Blum case (not overruled by the C. C. A. Sixth in the Blum case), that the claim is limited to a hatching method wherein the air is caused to circulate first to the eggs in the advanced stage of incubation and thence to the eggs in the earlier stage of incubation, there can be no infringement of the claim by respondents.

Although the Circuit Court of Appeals for the Eighth Circuit in the instant case found as a *fact* that in respondents' device, there "is a wide general diffusion of air kept moving around all of the eggs * * *" and thereby the said Court distinguished the air circulation in respondents' machine from an air circulation in general current form, petitioner still contends (page 37 of petitioner's brief and elsewhere) that the air in respondents' machine moves in general current form through definite channels or paths. Respondents contend that in their incubator the air does not circulate in general current form. There is a general mixing, churning, agitating and diffusing movement of the air in respondents' machine.

The controversy as to whether or not the air moves in general current form within respondents' machine is highly important for the reason that claim 1 of the Smith patent is clearly limited to a method of hatching eggs wherein air in a general current form is caused to circulate within a chamber containing eggs. The claim has been so held limited by the C. C. A. Eighth in the instant case, the C. C. A. Sixth in both the Petersime case and the Blum case, the C.

C. A. Third in the Hillpot case and even the C. C. A. Ninth in the Waxham case.

It, therefore, becomes highly necessary for this Court to correctly understand the construction and operation of respondents' incubator, so that this Court can determine for itself whether or not respondents escape infringement of claim 1 of the Smith patent on the sole ground that respondents do not utilize a current of air of the type specified in the claim.

Some Matters Requiring Advance Consideration for Properly Weighing the Testimony.

Preliminary to the consideration in detail of the construction and operation of respondents' incubator, certain matters should be called to the Court's attention in order to enable the Court to properly weigh the testimony.

a. *Tests of the Machines in Question by the Respective Parties to the Suit.*

Directly prior to the trial of this case before the U. S. District Court, the respondents, pursuant to written notice to petitioner's counsel, made careful tests at Minneapolis, Minnesota, of a commercial specimen of the machine of the Smith patent in suit, and of a commercial machine of the respondents' manufacture called the "Snow" machine. The machines were both introduced into evidence, the respondents' Snow machine being marked "Defendants' Exhibit F," and the Smith machine being marked as "Defendants' Exhibit H."

At the said tests of said two machines, the petitioner's counsel, Mr. Albert L. Ely and the petitioner's assistant

general manager and alleged expert, Mr. Taggart, were present. The tests were conducted under the supervision of Professor Frank B. Rowley, the respondents' expert, and after the tests supervised by said Rowley were completed, petitioner's counsel and expert were invited to make whatever further tests they desired on the said machines, but they did not make any.

The tests made by respondents at that time were, therefore, *inter partes* tests, fairly made, in the presence of counsel for petitioner and his expert. Test data sheets showing the results of these tests are in evidence on behalf of the respondents as "Defendants' Exhibits J-1 and J-2" Diagrams of Rowley's test of the Smith machine (R. 557-560), and "Defendants' Exhibits M-1 to M-7" Diagrams of Rowley's test data of Snow machine (R. 571-584).

The said machines "Defendants' Exhibits F and G" were also shown to the District Court during the trial of the case. They were also taken to St. Louis, at the hearing before the Circuit Court of Appeals and were set up and operated in the court room of said Court at St. Louis, Mo., in the presence of the Judges thereof. Offer has been made to this Court to bring these said machine exhibits to Washington, set them up and operate and demonstrate them to this Court at a convenient location. Respondents will be very glad to do this, at any time, at the Court's pleasure.

Petitioner, at the trial of the case, also introduced into evidence two incubators, one of which "Plaintiff's Exhibit 16" was a commercial specimen of petitioner's machine but the other of which was an incubator, not made by respondents, but made by petitioner, and alleged to be of the same construction and operation as the incubators made and used by respondents. This latter machine was introduced as "Plaintiff's Exhibit 17" and was called "Plaintiff's model

of Snow machine." No opportunity was given respondents to make tests on the machines introduced into evidence on behalf of petitioner, and although the said machines were shown to the Court at the trial of the case, petitioner never made any tests on the said machines within the jurisdiction of the trial court or in the presence of respondents or their counsel or expert.

Petitioner, however, put into evidence as "Plaintiff's Exhibits 12 to 12KK" (R. 473-493) an elaborate set of test data made during several months' time in unnoticed *ex parte* tests by petitioner's expert, Mr. Taggart, on the alleged reproduction of respondents' machine, "Plaintiff's Exhibit 17," manufactured by petitioner. This test data was put in evidence in an attempt to show the air circulation in the incubator used by respondents and alleged to infringe the patent. In addition to this, petitioner also put into evidence as "Plaintiff's Exhibits 13 to 13KK" (R. 495-511) a number of test data sheets corresponding to most of the sheets introduced as "Plaintiff's Exhibits 12 to 12KK" but colored in an effort to convince the Court of a general current movement in respondents' incubator. Then petitioner also introduced into evidence a colored celluloid model, "Plaintiff's Exhibit 14," wherein celluloid sheets colored after the manner of "Plaintiff's Exhibits 13 to 13KK," were put in place within a small sized box alleged to represent respondents' machine. All of the said "Plaintiff's Exhibits 12 to 12KK, 13 to 13KK, and 14" were therefore based on *ex parte* tests made by petitioner's expert, Mr. Taggart, on the machine "Plaintiff's Exhibit 17," built and manufactured by petitioner but alleged to be made in accordance with respondents' machine. When Mr. Taggart, under cross examination (R. 409), was asked why he did not make the tests of plaintiff's model of the Snow machine within the jurisdiction

of the Court and invite respondent and his counsel to be present, Mr. Taggart replied:

> "A. That has not been our custom. It is not the practice of the attorney in charge of the matter. *We* prepared our data. *We* brought our data here. *We* brought the machine here. I have testified to making the tests and I have had the Court there to show him how the tests were made.
>
> The Court: In other words, that was the way you wanted to do it.
>
> The Witness: Yes, sir."

In view of the *ex parte* character of all the tests of said machine, "Plaintiff's Exhibit 17," made by petitioner, it is respectfully submitted that none of the exhibits, "Plaintiff's Exhibits 12 to 12KK, 13 to 13KK and 14," and none of the testimony regarding the same, introduced into evidence on behalf of petitioner, in an attempt to show the air circulation in respondents' machine, are entitled to any weight whatsoever, except where corroborated.

The courts have so held in a long line of decisions, of which those hereinbelow identified are sufficient for purposes of illustration.

> *Plunger Elevator Co. vs. Standard Plunger Elevator Co.*, C. C. A. 1st, December 4, 1908, 165 F. R. 906, 911.

On page 911, near top of the reported decision in that case, said C. C. A. made the following statement, to-wit:

> "The evidence that the defendant's pilot valves are so throttled as necessarily to cause a slow stop of the elevator is unsatisfactory. *We disregard altogether the report of tests made* apparently by a skilled operator, *some of them in the absence of the complainant* * * *."

Bemis, et al., vs. Charles A. Stevens & Bros., C. C. N. D., Ill. (Mar. 24, 1910), 177 F. R. 717.

The patent in suit was for a station terminal in a pneumatic dispatch tube system and the plaintiff put in some *ex parte* tests, and, respecting this matter, the trial court, Circuit Judge Kolstadt, made the following statements, to-wit:

> "I give *no weight* to complainant's experiments *made in the absence of defendants.* Such attempts at *making* evidence are not to be encouraged."

Kuehmsted vs. Farbenfabriken of Elberfeld Co., C. C. A. 7th, May 11, 1910, 179 F. R. 701-707.

That Court, on page 707 of the reported decision, said:

> "Courts place little weight on *ex parte* demonstrations in any case."

Permutit Co. vs. Harvey Laundry Co., et al., D. C. W. D., N. Y. (June 16, 1921), 274 F. R. 937.

The suit was brought under the Gans patent, 1,195,923, for a water softening apparatus. On page 945 of the decision, appear the following statements, to-wit:

> "The testimony of experiments by defendants' witnesses Terry and Partridge, included in the record, was not taken before the court. * * * The witnesses were not cross examined, and no notice had been given to plaintiff of the experiments. The cases hold that *ex parte* experiments are usually disregarded by the court." Citing *Bemis vs. Stevens & Bros.*, 177 F. R. 721; *Bethlehem Steel Co. vs. Niles-Bement Pond Elevator*, 166 F. R. 880-888.

Carson vs. American Smelting & Refining Co., C. C. A. 9th (Feb. 16, 1925), 4 F. R. (2) 463, 465-466.

In this case, a patent on a metallurgical furnace was involved and, on pages 465-466, the said Court of Appeals for the Ninth Circuit made the following statements, to-wit:

> "The court below was of the opinion that the practicability of the Siemens' patent was established by the experiments made in the appellee's furnace at Garfield, Utah, after the commencement of litigation over the appellant's patent. The experiments were conducted by the appellee's employees. The chief operator testified that there were strict orders against the presence of visitors and that neither the *appellant nor anyone in his behalf was invited to be present.* Evidence of experiments thus conducted by an interested party, and in the *absence of his adversary* is always received with *suspicion* and is more or less *discredited.*"

The Court then cited *Carnegie Steel Co. vs. Cambria Co.*, 185 U. S. 403, and some of the cases hereinbefore identified.

b. *As to the Two Experts.*

Although Mr. Taggart who made the said *ex parte* tests on the petitioner's manufactured model of respondents' machine, "Plaintiff's Exhibit 17," was introduced as petitioner's expert witness at the trial of the case, his testimony (R. 56 and 120) shows that he was self-interested in the outcome of the suit, being Assistant General Manager of the Smith Incubator Company, petitioner's licensee, and working for said company, or Smith, or both, on a salary and a percentage of the gross profits of the business. His testimony, therefore, should be heavily discounted where uncorroborated.

Respondents' expert, Professor Rowley, on the other hand, had no interest in the litigation. He was a nationally

known, highly educated and experienced mechanical engineer who not only was at the head of experimental engineering at the University of Minnesota, but he also had a large consulting practice. He had specialized on heating and ventilating and at the time of the trial of the case, was President of the American Society of Heating and Ventilating Engineers, a national association, and he had been the Vice President thereof, and Chairman of its Research Committee for a number of years before he became its President (R. 182-183). By his conduct on the stand, Prof. Rowley showed his honesty, frankness and fairness to both parties.

THE STRUCTURE OF RESPONDENTS' INCUBATOR AND THE HATCHING METHOD CARRIED OUT BY THE USE OF THE SAME.

Respondents' machine and the hatching method carried into effect when the said machine is used, has nothing in common with the machine of the Smith patent and the hatching method there disclosed except what was old and common in the prior art.

Verified Description of the Structure of Respondents' Incubator.

Respondents manufactured and used two slightly different types of incubators; but in these two types the only material difference in structure was that, in the earlier type the air in the incubating chamber was heated by steam from steam pipes under thermostatic control and located in the upper part of the corridor of the machine, and in the later type this heating of the air was electrically done by suitable radiators or radiating bars in the form of electrical resistances adapted to be cut into or cut out from an electric

circuit by a thermostat. The hatching method carried out by each machine was and is identically the same.

Photographs of the earlier steam heated machine are in evidence as "Defendants' Exhibits E-1, E-2, E-3" (R. 545, 547-549).

The specimen of respondents' incubator, "Defendants' Exhibit F," introduced into evidence, was one of respondents' electrically heated incubators. Photographs of this said machine marked "Defendants' Exhibits D-1 to D-5," inclusive, are found on pages 535 to 543 of the record. Scale drawings illustrating the structure of the said respondents' machine were introduced into evidence marked "Defendants' Exhibits L-1 to L-5," inclusive (R. 561 to 569).

By reference to the above identified photographs, and scale drawings, it will be seen that the structure of that machine is, in substance, as follows:

A large rectangular casing of greater length than its width or heighth, with an entrance door in its vertical front wall, is employed, and the interior of this casing does not contain any partitions of any kind. In other words, it has only a single large chamber. In this single chamber, are suitably mounted two sets of tiers of superimposed trays spaced apart from each other so as to afford between the same a central corridor always in communication with both sets of tiers of superimposed trays. The two bottom members of each tier of trays are stationary, but all the others are so mounted on supporting chains that they can be tilted so as to stand in horizontal positions when receiving the eggs being set and into inclined positions for turning the eggs at such intervals as desired.

The trays have wire mesh bottoms and those carried by the chains are spaced apart from each other in the vertical plane, so as to afford considerable clearance or space between each

of any two adjacent trays, and these spaces are always in communication with the central corridor.

The said two sets of tiers of superimposed trays are each spaced away from the adjacent side walls of the casing a short distance, as best shown in Fig. 4 of said scale drawings, and in these spaces are mounted agitators for agitating and circulating the air. There are two agitators on each side spaced apart from each other a suitable distance, and also each spaced apart a lesser distance from the end walls of the machine, as can be understood from Fig. 2. The blades of the agitators are carried by horizontal shafts which extend through the side walls of the machine and are provided with driving connections to suitable electric motors, suitably supported at the outside of the respective side walls of the casing, and belted to suitable pulleys on the agitator shafts. The door in the front vertical wall of the casing, as shown in Fig. 1, gives access to the interior of the machine, directly into the corridor between the opposite sets of tiers of trays, and, from the position of a person standing inside the corridor, near the door, and looking rearward, the two agitators at the left would be so rotated that the upper members of the blades would be turning toward the face of that person, or toward the door of the machine, while, on the opposite or right-hand side, the two agitators would be so rotated that the upper members of the blades would be turning away from said person's face, or towards the rear of the machine.

Each of the two side walls of the machine are provided with a series of fresh air inlet holes in zones slightly above the agitator shafts and these holes are covered with box-like covers secured to the walls of the machine and provided with doors at their opposite ends, for controlling the amount of fresh air admitted to the machine. The top wall of the cas-

ing is provided with used air outlets, provided with sliding dampers to vary the size of the discharge openings, at will. In the corridor, near the upper end of the same, a pair of girders or longitudinal wooden bars, extend the entire length of the corridor, and are provided, at suitable intervals with laterally projecting horizontal brackets, which support water-evaporating pans for moistening the air at the same time it is heated. In Fig. 2 of said scale drawings, an additional air-moistening device is shown with its base resting on the floor of the corridor. Directly above the said water-evaporating pans, are located radiating plates, adapted to be connected into or cut out from a switch-controlled electric circuit for heating the air. These radiating plates are shown as supported by brackets depending from the top wall of the casing.

The numerals appearing in two vertical rows on the back wall of the corridor in Fig. 4 of said scale drawings indicate the way in which the eggs are set, at three day intervals, in the usage of the Snow incubator. The numerals 1 show the location of the first setting. The numerals 2 indicate the location of the second setting. The numerals 3 indicate the location of the third setting; and so on, for the fourth, fifth and sixth settings. It will thus be seen that some of the trays occupied by the first setting are sandwiched between other trays which take later settings; and the same remarks apply as to any of the other settings. Still otherwise stated, some of the witnesses said that the different settings are sandwiched. After the settings are once made, the eggs always remain where they are set in the tier until the chicks are ready to hatch. They are never shifted from their set locations.

Mr. Snow described this matter in his testimony (see R. 141-143), and there was offered in evidence a so-called egg-

setting sketch, "Defendants' Exhibit C," made by Mr. Snow (R. 533).

The temperature of the air is thermostatically controlled by a thermostat, which is automatic in its action and keeps the temperature constantly at between 99° and 100° F. The position of the thermostat is shown in Fig. 1 of said scale drawings.

The agitators are so supported that they rotate in vertical planes quite close to the side walls of the casing. As shown in the drawings, these agitators have diameters of about four feet 8½ inches. The blades of these agitators are set at an angle to the plane of rotation.

Mr. E. H. Snow testified that, in the usage of these machines, he aimed to drive the said agitators as nearly as possible, at 200 revolutions per minute (R. 141). He further stated, however, that there was some slippage of the belts; and, hence, that the number of revolutions per minute varied to some extent (R. 152).

There is no dispute between the parties or their expert witnesses as to the structure of the defendants' Snow machines of either the earlier or later types.

The Hatching Method Practiced by Respondents.

Briefly stated, the mode of operation of the Snow incubator, or the method of hatching eggs practiced by respondents, is as follows:

The Snow air-moving means, to-wit: his agitators, rotating in vertical planes, are really *centrifugal stirrers and not true propeller fans, for the reason that they throw off the air centrifugally, tangentially in all directions, chiefly from the tips of the blades,* rather than in axial streams, as do true propeller type fans, such as used in the Smith ma-

chine. The pitch of the blades of the agitators is such that this pitch would normally urge the air to move outwardly from the agitators toward the corridor of the machine. However, the blades of the agitators, because of the smallness of the space, between the same and the side walls of the casing, cannot be fed with sufficient air to supply their demands from their backs. They, unlike true propeller fans, are compelled to get the majority of their feed of air from their fronts or faces looking toward the corridor.

Air is drawn by the agitators, chiefly in horizontal planes, in and through the egg trays toward the side walls of the casing into the eyes or centers of the agitators, at their fronts. At the same time, the agitators draw a certain amount of fresh outside air at their backs into their eyes or centers through the damper-controlled air inlets in the casing. This fresh air is mixed with some old or used air, between the blades of the agitators and the side walls of the casing, prior to its movement into the centers of the agitators. As a result of this peculiar feed, most of the air drawn into the agitators, between the blades of the same, is thrown off centrifugally from the outer ends of the blades to a greater extent than would have been the case, if the blades of the agitators had not been pitched at the angle that they are, relative to the plane of rotation but had been set in planes coincident with their supporting shafts. The centrifugal movement of the air, as it discharges from the agitators, causes the air to move tangentially in all directions, chiefly from the tips of the blades. However, some air is forced by the outer portions of the blades toward the corridor through and in between the egg trays and over and under the egg trays.

The air moved by the agitators is not confined in its movement in any way or by any means within the casing

and it moves freely in all directions to all points therein. Of course, some of the air strikes the walls, top and bottom of the casing, and, as the agitators are moving near the side walls, the air adjacent the side walls, top and bottom of the casing, is highly agitated, thereby preventing cold spots in the casing near the side walls, top and bottom. As one views the two agitators, at the right side of the machine from the front of the corridor, these two agitators revolve in the same direction; and, in the upper zones of their rotation, the blades turn toward the rear of the machine, but, while rotating in the lower zones, said blades turn toward the front of the machine. Between said two agitators, the blades thereof, traveling in adjacent zones, move in opposite directions. As the air moves centrifugally and somewhat tangentially from the tips of the blades of the agitators, it will be readily seen that the air must move in diversified directions at the upper and lower zones of the agitators, and that the air is thoroughly mixed between the agitators. Similarly, when the two agitators at the left side of the machine are viewed from the corridor, the blades of these two agitators turning in the upper zones move toward the front of the machine while the blades turning in the lower zones move toward the rear of the machine; and, hence, the two agitators on that left side will move the air in diversified directions and mix it. In other words, the two sets of agitators on the opposite sides of the machine move the air in different diversified directions. The agitators at the right side of the machine face the agitators at the left side of the machine, and, naturally, the air movement created by the right-hand set of agitators is affected largely by the air movement created by the left-hand set of agitators, thereby creating a thorough and general mixture of all the air in the casing.

The blades of each agitator are four in number and the agi-

tators revolve slowly at a speed of about two hundred revolutions per minute. The slow moving flat blades, few in number, constantly cause a change in the direction of movement of the air, at many points, by reason of, first, the approach of the blades to those points and then the movement of the blades away from those points. As a result of these actions, there is a constantly changing movement of the air, at a great many points, near the side walls, top and bottom of the casing, and elsewhere in the casing. In other words, there is a fluctuating movement and sometimes a pulsating movement, and sometimes a reversing movement of the air at many points within the casing.

Some of the air thrown centrifugally outwardly by the blades strikes the top and bottom walls and moves over and under the egg trays and through and between the egg trays out to the corridor. Some air moves towards the back end of the casing, some towards the front end thereof, some moves up through the egg trays, and some moves down through the trays; but the movement of the air through and between the trays is chiefly in the horizontal plane by reason of the open horizontal passages or spaces between adjacent trays. Some of the air eddies back toward the eyes or centers of the agitators; some of the air moves entirely across the corridor from one side of the casing to the other and from front to rear of the machine; some of the air moves from the left side of the machine toward the right side of the machine out to and in from the corridor; while some moves from the right side of the machine toward the left side of the machine out to and in from the corridor. Other air movements are from front to rear of the machine and from rear to front into and out of the corridor. Air moves in practically every direction, and at many points it reverses its direction of movement from one instant to the next, so that there is no steady or continuous movement in any direction.

The air in the corridor mixes and commingles with other

air moving out to and in from the corridor. *The movement of air between the egg trays is chiefly in a horizontal plane* and is from front to rear, rear to front, in and out, relative to the corridor, to and from the side walls and the front and rear walls.

The air movement in the machine can best be defined as a general mixing, churning, agitating and diffusing movement.

It is true that at certain points there are air movements which might be called currentlets that have an orderly movement toward the eyes of the agitators. This is bound to be true in any chamber where air is circulated in any manner by mechanical means. Air moved by mechanical means in a chamber will, in its feed to the mechanical means, naturally take the paths of least resistance, and be, to that extent, orderly in its travel. When considered as a whole, the air goes where it "listeth" in every direction, but never in columns through a predetermined path.

The air in its movement picks up heat from the heating elements and moisture from the water pans and humidifier. This heat and moisture, by reason of the air movement, is uniformly distributed throughout the casing so that all the air throughout the casing is kept at substantially the same temperature and humidity. The temperature in the casing is maintained substantially constant by the thermostat controlling the heating elements. An amount of air within the casing, corresponding in quantity to the quantity of fresh air taken in through the damper controlled fresh air inlets, is exhausted through the damper controlled exhaust outlets in the top of the casing. This exhausted air carries off the carbon dioxide from the hatching eggs and the supply of needed oxygen is being constantly renewed by the fresh air admitted.

The air moves over, under and about the eggs in the vari-

ous egg trays as stated. The eggs in the various trays are so set that the eggs in the more advanced stages of incubation are sandwiched between eggs in less advanced stages of incubation and the eggs remain where set until ready to hatch. As the air is constantly being mixed, the air striking the colder eggs, *i. e.*, the eggs in the less advanced stages of incubation is at the same temperature as the air striking the warmer eggs, *i. e.*, the eggs in the later stages of incubation. Heat from the air is absorbed by the colder eggs and given up to the air by the warmer eggs. The egg arrangement or setting is such as to take full advantage of radiant heat. By sandwiching colder eggs between warmer eggs, heat is radiated directly from the hotter to the colder eggs and approximately one-half of the heat transmitted is by radiant energy in this manner. This sandwiched type of stage incubation used assists materially in maintaining an even temperature throughout the eggs.

The type of stage incubation used by Snow makes it absolutely impossible for the heated air to be carried first to the eggs in the more advanced stage of incubation and then to those in the less advanced stage.

The air circulation in the Snow machine makes it absolutely impossible for the heated air to be carried first to the eggs in the more advanced stage of incubation and then to those in the less advanced stage, even if the Smith type of stage incubation were used, which is never done.

The air is not circulated in general current form in respondents' machine. It is not circulated in defined paths or channels. There is nothing used in the Snow machine to cause the air to move in current form in defined paths or channels.

Verification of the Fact That Respondents Do Not Circulate the Air in General Current Form When Carrying Out Their Hatching Method.

That the foregoing is a true and correct statement of the Snow hatching method and the air circulation used by respondents will now be verified by the testimony of record.

Both petitioner's expert, Mr. Taggart, and respondents' expert, Prof. Rowley, agree that the Snow agitators, sometimes called paddles, or fans, do not have a true propeller fan action but rather have a stirring or agitator action by throwing out the air centrifugally from the ends of the blades. Plaintiff's expert, Mr. Taggart, in speaking of the Snow agitators, states (R. 101):

> "Now, this type of fan, with the blades set at an angle of 45°, your first thought would be that that would throw the air, push the air out forward. They would if they were placed out in the open but as they are placed here, within an inch and a half of the wall, they cannot feed from behind. That is, no air can get to them from behind, so in their operation they throw the air off centrifugally. As they go around they throw it off centrifugally and we find that the arrows here around the outside of the fans show the direction of the air as it is thrown off from the fans. Now, throwing off the air there, the fan must feed. That is, no fan can throw air unless it feeds from some place and these fans feed almost entirely from the front. That is, the air flows into them in the front, flows into them, is thrown out centrifugally from the fans."

Mr. Taggart's above description of the action of the Snow agitators is corroborated and amplified considerably by re-

spondents' expert, Professor Rowley (R. 203-204). Further, the entire air circulation of the Snow incubator is correctly described by the unbiased and disinterested witness, Professor Rowley, at this point, to-wit:

> "Now, in the Snow incubator—I have described the general structure of it—there are four motor driven agitators. That is, they are driven through a belt, one on each side—or two on each side of the incubator. And those are for the purpose of mixing up the air, agitating it, and stirring it up in the incubator. Now, those agitators are wheels, paddle wheels, which at first sight you might think were designed exactly like a propeller fan. Now, they are so placed and so rotated that if they were used as a fan in the true sense of a fan, they would throw the air outward from the face of it into the center of the corridor. In other words, the pitch of those blades is so set and the blades are so rotated that the tendency, as far as the pitch is concerned, is to throw the air horizontally outward into the corridor.
>
> Now, as a matter of fact, there can't be enough air supplied from the back of those blades and there is a centrifugal force throwing the air off from the ends of those blades and that centrifugal force is stronger than it is to pull it—than the force which propels it forward. Therefore, the air is actually thrown in every direction off from the tips of those blades in a centrifugal—that is, in a plane of rotation, and slightly forward at the ends of the blades. Now, of course, there is all kinds of action going on underneath that we can't explain in detail, back of those blades. The air which is thrown off at the end of the blades, in these various directions is not at the blade, is partly forward, because there is a

double pressure that is a component force, one tangential and the other out into the incubator, you might say. Now, of course, the air must come from some place, and it comes into the center of those fans against the pitch of the blade. Now, I say, into the center of the fans. They are not in a true sense fans. They are agitators, because they aren't working like a fan. If they were fans they would throw the air outward and they would be designed differently. If you had any intention of using them as a fan you wouldn't expect to run them backwards. They pull the air in through the center, through the eye of it. The air is thrown out then at the top, bottom, in every direction from the fan, from where it circulates, partly around the outside housing, and partly out through the trays, back around there, there are eddies, currents all through those trays. That is, we have in the incubator—I have described one of these agitators, there are four of them operating. Now, those four agitators acting together throw the air out from each one of them and those streams of air come together. They mix and diffuse and go all places and directions. If you tried to get the direction back in there, one of those fans, you would find the air is going in every direction. I won't say every, but it is all mixed up. It is a difficult thing to define just where the air current is there, if there is any. Now, of course, you can take agitation or a mixing of that kind and you can find some place in an orderly operating machine where certain currents will go in one general direction, but the general effect of all of those operating together is a turbulence in there, a mixing and agitation of the full air in that incubator. It is just the same as if this large room, only on a different scale, had large paddle wheels on the side

which would mix this air all around in here. We wouldn't expect to find anything except a general mixture. And that is how the paddles in here are mixing the air and distributing it throughout the incubator in different directions, some of it passes into the trays, some of it passes out through the trays. Some of it passes over the trays. Some of it even is stationary. That is, there is much of that air that never even circulates and never even comes to the corridor and down to a mixture in there that is going in practically every direction and you will find many cases in there where it reverses and goes back and forth. It is simply a mixing and agitation of the air in the incubator, and that is the circulation system."

Snow, both on direct examination and cross examination, gives an independent description of the action of his agitators and his description is substantially to the same effect as that given by Taggart and Rowley at the places above identified.

It is clear, from the above identified testimony, that both of the expert witnesses in the case, as well as the respondent Snow, agree on the fact that the Snow paddles, fans or agitators, have an *agitating action,* unlike that of an ordinary propeller fan, and deliver the air centrifugally from the ends of the paddles in tangential different directions, so as to cause a mixing, churning or agitation of the air. In other words, they do not produce a single column of air moving in a predetermined definite path. This action of the Snow agitators or fans is in great contrast to the action of the fans of the Smith machines, which are true propeller fans, and deliver all the air in columnar form downwardly in a single definite path through the corridors.

The two experts and Snow are in agreement that there is

a general mixing of the air in the corridor of the Snow machine. Petitioner's expert, Mr. Taggart (R. 104), states:

> "In the corridor there are numerous places where the air is not in definite form because it becomes a *mixing chamber* where the air currents come in from the ends and from the top and from the bottom. There, there is a curving or mixing before it is drawn back through the trays again and in the corridor you can't say that it is a definite current."

Respondents' expert, Mr. Rowley, and the respondent Snow, all through their testimony, state that there is a general agitation, churning and mixing of the air in the corridor of the Snow machine. Taggart, Rowley and Snow are, therefore, in agreement that there is no defined current circulation of air in the corridor of the Snow machine.

The experts, Messrs. Rowley and Taggart, agree that there are numerous points in the Snow machine where the air movement through the trays is first in one direction and then in an opposite direction.

Although Taggart's test data, "Plaintiff's Exhibits 12 to 12KK" and "13 to 13KK" (R. 473-511), secured from *ex parte* tests made for the purpose of showing a general current movement in respondents' machine, cannot be relied on to show the true air movement in the Snow machine, as we shall later point out, even these tests by Taggart show by combination plus and minus signs that there are numerous points in the Snow machine where there is a reversal of movement of the air or sometimes no movement whatsoever. Mr. Taggart stated (R. 102), when speaking of his tabulated tests, as follows:

> "If there is a plus and minus joined in a circle, as there are in a few places, it means that when the ane-

mometer is placed in that position it does not run steadily in one direction. It may reverse itself or it may not even run at all."

Mr. Taggart relied on anemometers to tabulate both the direction and velocity of air movement in his *ex parte* tests. When the anemometers reverse themselves or do not move at all, this shows respectively that the air reversed itself in direction from one moment to the next or did not move at all.

Professor Rowley in his testimony above quoted (R. 204) states that there are many places in the Snow machine where the air reverses itself back and forth. Later (R. 208-217), Rowley explains the *inter partes* tests that he made on the Snow machine. These tests are in evidence as "Defendants' Exhibits M-1 to M-7" (R. 571-584). These test data sheets show the true air movement in respondents' machine. In making these tests and in tabulating the tests, the person viewing the machine, as shown in the drawings, is considered to be looking from the corridor toward either one side of the machine or the other. The letter "I," designates in movements of air from the corridor toward the side walls, the letter "O," out movements of air from the side walls toward the corridor, the letter "F," movements of air toward the front of the machine, the letter "R," toward the rear of the machine, the letter "U," air movements up, the letter "D," air movements down, the word "MIX," a mixing movement of the air where no definite movement other than a stirring movement could be determined. To determine the air movements, Professor Rowley used smoke and he tabulated the movements of air throughout the machine, in accordance with the direction of movement, or directions of movement of this smoke. Many of the air movements were combination movements such as in and front "IF," out and

up "OU" and there are a great many tabulations of air movements showing that the air reversed itself from one instant to the next, "IOR" in, out and up, "IO" in and out, etc. There were also numerous places where the air was found to mix as shown by the symbols "MIX." This can all be verified by reference to Defendants' Exhibits M-1 to M-7 and from Professor Rowley's testimony (R. 208 to 217), which is too long to quote here, but should be read.

Rowley and Snow on the one hand, and Taggart on the other hand, do not agree as to the general air circulation throughout the Snow machine. Respondents' unbiased and disinterested expert, Professor Rowley, corroborated by respondent, Mr. Snow, testified that the general circulation throughout the Snow machine was a general mixing, churning, agitating and diffusing movement. On the other hand, petitioner's uncorroborated and self-interested, biased expert, Mr. Taggart, contended that the general circulation throughout the Snow machine was in definite and defined paths. We believe and contend that Professor Rowley and Mr. Snow were right in what they said about the air circulation of the Snow machine and that Mr. Taggart was wrong except where corroborated by Rowley and Snow in what he said about the air circulation of the Snow machine.

Of the three witnesses, Snow, Rowley and Taggart, Mr. Snow's testimony is the most reliable to truly state the air circulation under actual operating conditions, for he is the only one of the three witnesses who actually had experience in the operation of the Snow machine under working conditions with the eggs in the incubator and hatching. Under direct examination (R. 150, 151), the questions and the answers given by Mr. Snow are as follows:

> "Q. Now, just describe in detail in your own way, based on your own experience, with the machine, just

how the air is circulated in your incubating machine.

"A. Well, in the incubators, the electric and the steam, the air is circulated the same in both of them. That air, as I said before, is agitated by agitators adjacent to the outer wall in the cooler spots of the incubator, as it would stand to reason, the cooler places would be on the outer wall. That air is being agitated by the four bladed agitators, and run at a low speed, which, as we hope to run them, at about 200 revolutions per minute, or around there. There is some outside fresh air taken in through openings on the side, which is above the center of the agitators; they running at a slow speed causes a certain distribution of the air throughout the incubator, which works and goes out and expels somewhat from the end, and somewhat towards the front and somewhat going back towards the eye of the fan, and, therefore, causing a complete mixture and agitation of the air in the entire incubator. The air is moved over and under the trays and in some places it may have a slight outer movement, but the main movement of the air is more on a horizontal plane in that incubator, and, therefore, eliminating any hot or cold spots, and causes the chicks to hatch at the same time—at the same time in the trays, that are set at the same time, and by having no cold spot or hot spot in the incubator, you get a better quality chick and a better livable chick and a better looking chick, than one which is not properly hatched. There is somewhat greater movement of the air around the outer wall—the entire outer wall and the ceiling and all, to a certain extent, which takes care of any exposure and makes it possible to carry an even temperature throughout the incubator.

"Q. Is there any column of air?

"A. There is no columns of air because it is not necessary to have columns of air, in that incubator. It is simply made on the principle whereby the air can be agitated and moved between the trays at a slow movement to take off any excess warm air that might be there, or any cold air, and it is not necessary to have a large volume or current of air forced in any way through or on the hatching trays or in that incubator.

"Q. Did the test that you saw made of these incubators of your own, either the steam heated one at Sleepy Eye, or the electrically heated one here in Minneapolis, give you any reason to change your own theory of the operation of the air circulation in your own machine?

"A. Not in the least."

The testimony of Mr. Snow, in regard to the air circulation in his machine, was not shaken in the slightest degree under cross examination. Mr. Snow's testimony on this subject is of controlling weight, as everything he says is based on his own actual experience with the machine when the trays are loaded with eggs in actual commercial use. On the other hand, Mr. Taggart's testimony is based on no more than *ex parte* tests made on plaintiff's model of the Snow machine run idle without any eggs in the trays.

The previously quoted testimony of Professor Rowley in this chapter of the brief (R. 203 and 204) show what Professor Rowley considers to be the general air circulation in the Snow machine. This testimony substantiates what Snow has said. At another point, Professor Rowley under cross examination (R. 367), makes a short summarized statement of the air circulation in the Snow machine which reads as follows, to-wit:

"Well, the air goes into the fan, there, and it goes out in all directions, at the peripheries of the fan, and from there it goes to the ceiling, and the floor, to the end walls, and then between the fans, it comes together, of course, to a general mix, and it works its way back into the corridor, where it is agitated; and then it goes through the trays, coming out, and part of it goes around the trays; some of it starts out from the fan toward the corridor, and goes back before it gets out of the corridor; in other words, generally, the currents go in various directions, through the trays and about the trays, and about the machine."

Professor Rowley does not deny that there are some points in the Snow machine where some portions of the air move in orderly fashion, for a short distance, in currents. On page 367 of the record, for example, the following questions put by Mr. Ely and answered by Professor Rowley are found, to-wit:

"Q. And the air, the movement of the air in the Snow machine is in continuance (continuous) and repeated cycles or circuits?

"A. No, not in repeated circuits, not of any part of the air that goes all over the machine; you would not expect any portion of the air to follow the same circuit; these eddy currents go all over.

"Q. Yes. However, the main body—leaving out of consideration one particle of air, the main body of air moves in constantly repeating cycles or circuits, does it not?

"A. I would not say that, no; it mixes all over. Of course, you can find places in there where there are currents in one direction, or you can find areas in there

where there is a general movement, but you could not say that it moves constantly in one direction in the machine."

At one point in the testimony of Professor Rowley, when under cross examination by Mr. Ely, the following question and answer appeared (R. 366):

"Q. And we have a current of air in that Snow machine, do we not?

"A. Yes, we have a current of air through here."

The above statement is seized on by petitioner's brief writers as an admission that in respondents' machine there is a current of the kind defined in claim 1 of the patent. There is, however, no justification for any such interpretation of Professor Rowley's testimony immediately above quoted. In the previous portions of Professor Rowley's testimony he had explained that there was no general current circulation of air in the Snow machine and he had characterized the air circulation as being a general churning and mixing movement; then in portions of his testimony subsequent to the part immediately above quoted (R. 366) and namely (R. 367) above quoted, he again explained the air circulation of the Snow machine and pointed out that there were no continuous currents of air in the Snow machine which travel in repeated circuits in the machine. Hence, it is perfectly obvious that when Professor Rowley spoke of a current in the Snow machine, he meant merely that there was a continuous movement of air in the machine, but not of the kind produced and applied to the eggs in accordance with the disclosure of the Smith patent or by the Smith commercial machine.

Taggart's own *ex parte* test data does not back up his or petitioner's contention that the air circulation of the Snow

machine is by a general current movement passing in definite channels. The white colored portions of his test data, "Plaintiff's Exhibits 13 to 13KK," show that there are large areas through the egg trays where the air is being thoroughly mixed. When testifying about these exhibits, Mr. Taggart (R. 107) stated:

> "There is a space in between that is white and that is where the air is curving back from the blue into the red. *That is in an area of just plain mixing.*"

It will be seen that Taggart admitted that the Snow agitators did not have true propeller fan actions but, on the contrary, they moved the air centrifugally from their tips in all directions; he admitted that in the corridor of respondents' machine there was a general mixing of the air; he admitted that at many points through the egg trays and elsewhere there was a reversal of movement of the air from one moment to the next; and he further admitted that through the egg trays there were places where there was nothing but a mixing movement of the air. In spite of these admissions which conclusively show that the air in respondents' machine did not move in a general current in definite paths or channels, Taggart had the effrontery to say that the air was circulated in respondents' machine by a general current movement wherein the air followed definite channels or paths. Taggart's adverse admissions are absolutely inconsistent with his conclusions. His conclusions are groundless.

From the above it will be seen that the testimony of not only respondents' witnesses, but also the testimony of petitioner's expert witness, show that in respondents' incubator, there is no general air movement in current form moving in defined paths.

No Reliance Can Be Placed on Petitioner's Ex Parte Test Data to Show the Air Movement in Respondents' Incubator.

It has already been pointed out that, wherever uncorroborated, no credence should be given to petitioner's test data, "Plaintiff's Exhibits 12 to 12KK, 13 to 13KK" (R. 473-511), or to "Plaintiff's Exhibit 14" (physical exhibit) used by petitioner in an attempt to show a general air current in respondents' machine, because the test data was prepared from *ex parte* tests on a machine manufactured by petitioner and alleged by petitioner to be a reproduction of respondents' machine. Something more, however, should be said to conclusively prove that this test data does not show the true air circulation in respondents' machine.

"Plaintiff's Exhibits 12 to 12KK" purport to show by anemometer readings and arrows the direction of air circulation and the speed of air travel throughout the respondents' incubator. "Plaintiff's Exhibits 13 to 13KK" similar to "Exhibits 12 to 12KK" with the exception that "Exhibits 13 to 13KK" are colored, purport to show by color the air movement in respondents' machine as determined from the anemometer readings and arrows found on these sheets. The celluloid model, "Plaintiff's Exhibit 14," was colored substantially in conformity to the coloring of certain of the sheets found among "Exhibits 13 to 13KK" and petitioner attempted by this model to show a composite picture of the air circulation through one entire side of respondents' machine.

In addition to these various exhibits made from the *ex parte* tests carried out by petitioner's self-interested expert, Mr. Taggart, petitioner also introduced two, but only two, colored exhibits, "Plaintiff's Exhibits 22 and 23" (R. 523

and 525), wherein Taggart had colored two of Professor Rowley's seven test data sheets put in evidence as "Defendants' Exhibits M-1 to M-7" respectively. From these two colored sheets, "Plaintiff's Exhibits 22 and 23," petitioner attempted to show that Professor Rowley's test data bore petitioner out on his theory of the air circulation in respondents' machine.

The Anemometer Readings and the Arrows on Plaintiff's Exhibits 12 to 12KK and 13 to 13KK Show Neither the True Air Movement Nor the True Velocity of Air Movement in Respondents' Incubator.

Petitioner's expert, Mr. Taggart (R. 101-102), says that he relied on anemometer readings to obtain the direction of air movement in respondents' machine and he recorded the directions obtained in this way by arrows on his test data and he also recorded the speed of air movement determined by the anemometer readings on his test data. He further states (R. 102 and again 399-400) that he did not make friction corrections for the friction of the anemometers in tabulating his readings. His testimony in this respect (R. 399-400) reads as follows:

> "The speed of the air up through the trays, and in the air columns, between the trays, as recorded here, is the record shown by the three inch Biram anemometers of the type which I showed at the demonstration over here. Those anemometers are greatly affected by friction at the lower speeds. They still show direction, but it is necessary to have a big correction to take care of the low speeds. The manufacturers give you a correction chart for speeds from 200 feet to 1,000 feet. Below 200, the friction is of such consequence that they do not give you

a correction chart for those speeds. In making up these charts here, that is the speed that was recorded by those anemometers, and I have already stated on direct testimony that in the making of all of these charts, *I did not make the corrections for friction.* I gave the readings as given by the anemometers. * * * The friction slows the instrument down, and the readings, as I have recorded them here, are accurate, as recorded by the anemometers themselves."

In spite of the fact that Mr. Taggart admitted that he did not make corrections in the recorded readings for the friction of the anemometers and that the friction correction was so great that the manufacturers of the anemometers do not consider the readings of the anemometers sufficiently accurate below a speed of 200 feet per minute to even bother with furnishing a friction correction chart for the purchasers of the anemometers, Taggart still maintained that his readings were correct. Mr. Taggart stated (R. 102) that in preparing his test data he took over 1,500 anemometer readings. Of these various readings, more than 375 readings on "Exhibits 12 to 12KK" can be found showing a speed under 200 feet per minute. Admittedly, therefore, no credence can be given to more than one-fifth of the anemometer readings recorded by Taggart and very little credence can be given to the remaining readings because friction corrections for the anemometers used were not made. No reliance can be placed in anemometer readings so carelessly made and tabulated.

Attention is next called to the use of arrows made by Taggart on his test data in an effort to show current movement in the Snow machine. When referring to "Plaintiff's Exhibits 12AA to 12KK" (R. 102 and following) Taggart

stated that in making his tests the anemometers were placed in planes parallel to the fans of the Snow machine in obtaining the tabulations on his test data through the egg trays. The alleged direction of current movement was shown by arrows on the test data from these tests. Professor Rowley (R. 242-243) when referring to the use of anemometers by Mr. Taggart to show the direction of air movement, states as follows:

> "I don't know whether I have explained it, but if you take an anemometer and take (place) it in a turbulent air current you get component force or the component velocity in the plane of the anemometer, but you do not get the other angle to it. In other words, the anemometer may rotate and show the upward movement of a mass of air, but it does not show the current or the direction of the current in that area only in that component direction, as (is) shown by the anemometer, and, therefore, to begin with, I do not accept an anemometer as a proper means of measuring currents, unless you should have an elaborate mind, an unbelievable mind, respecting these eddy currents, and you should take an unbelievable number of records. It is not scientifically correct, but the data must be presented here for scientific reasons."

As the direction of travel of a sailboat does not show the direction that the wind is blowing driving that sailboat, so an anemometer reading does not show the direction of flow of the air stream that strikes the anemometer. Mr. Taggart attempts to show, by his arrows, anemometer readings and colored diagrams, that there is a general current movement of air in from the corridor of the Snow machine through the egg trays toward the side walls, except midway between the

front and rear walls of the machine, where he attempts to show that there is a general outflow of current to the egg trays. His anemometers, placed in parallel planes to the fans of the Snow machine, merely show the component air movements in and out through the egg trays and do not tell the whole story of air movement or the correct story.

Professor Rowley brought out several times in his testimony and shows in many places on his test data, Defendants' Exhibits M1 to M7, inclusive, that there is air movement front and rear through the egg trays of the Snow machine, and air movement up and down through the egg trays, and that, at many points, the air intermittently changes its direction of movement. As Professor Rowley states (R. 241, 242) when referring to air movement, as shown by arrows on the Taggart test data sheets:

> "It doesn't show anything about it. You are trying to show three dimensions in one plane. You are trying to show the motion or velocity in three dimensions in one plane, and you can't do it, and this shows it."

On R. 244-246, Professor Rowley points out that at many places on the Taggart test data sheets there are similar points shown in different exhibits in both vertical and horizontal planes through the Snow machine where anemometer readings are illustrated and arrows are used to show the direction of air movement. At many of these points, the arrows shown in the vertical views point in one direction and the arrows in the horizontal views point in an entirely different direction. If views and readings in other planes were illustrated, arrows would be found which showed still different directions. All this goes to show that the arrows on Taggart's test data cannot be regarded as showing true air movement. Although Mr. Taggart (R. 401, 402) makes an at-

tempt to justify the use of his arrows on his test data, in answer to Professor Rowley's criticism as to his use of the same, he fails miserably in his attempt. He says (R. 402) that the different planes should be taken into consideration when making any interpretation of the arrows. This would be almost impossible to do and would still give no true picture of the air circulation, because at most the vertical and horizontal views of the Taggart test data would only show component forces in two directions, while there are component forces of air movement in all directions.

No reliance whatsoever may be placed on the arrows in the Taggart test data to show direction of air movement.

Plaintiff's Exhibits 13 to 13KK and 22 and 23 Colored by Taggart Do Not Show the True Air Movement in the Snow Incubator.

The red and blue colors applied to Plaintiff's Exhibits 13 to 13KK mean nothing because that coloring was placed on those colored exhibits through interpretation by Taggart, of the air movement in the Snow machine, by use of anemometer readings and arrows. It has been above pointed out that those anemometer readings and arrows cannot be relied on because, at most, they designate no more than the components of air movement in or out from the corridor of the Snow machine and not the true air movement.

It seems to be admitted by Petitioner's expert, Mr. Taggart, that Professor Rowley shows the true air movement of the Snow machine in Defendant's Exhibits M1 to M7 for Taggart has attempted to show the air movement in the Snow machine by coloring up with red and blue crayon, Defendant's Exhibits M4 and M6, these colored sheets being introduced in evidence as Plaintiff's Exhibits 22 and 23. Although

Data on line D D Test Diagram

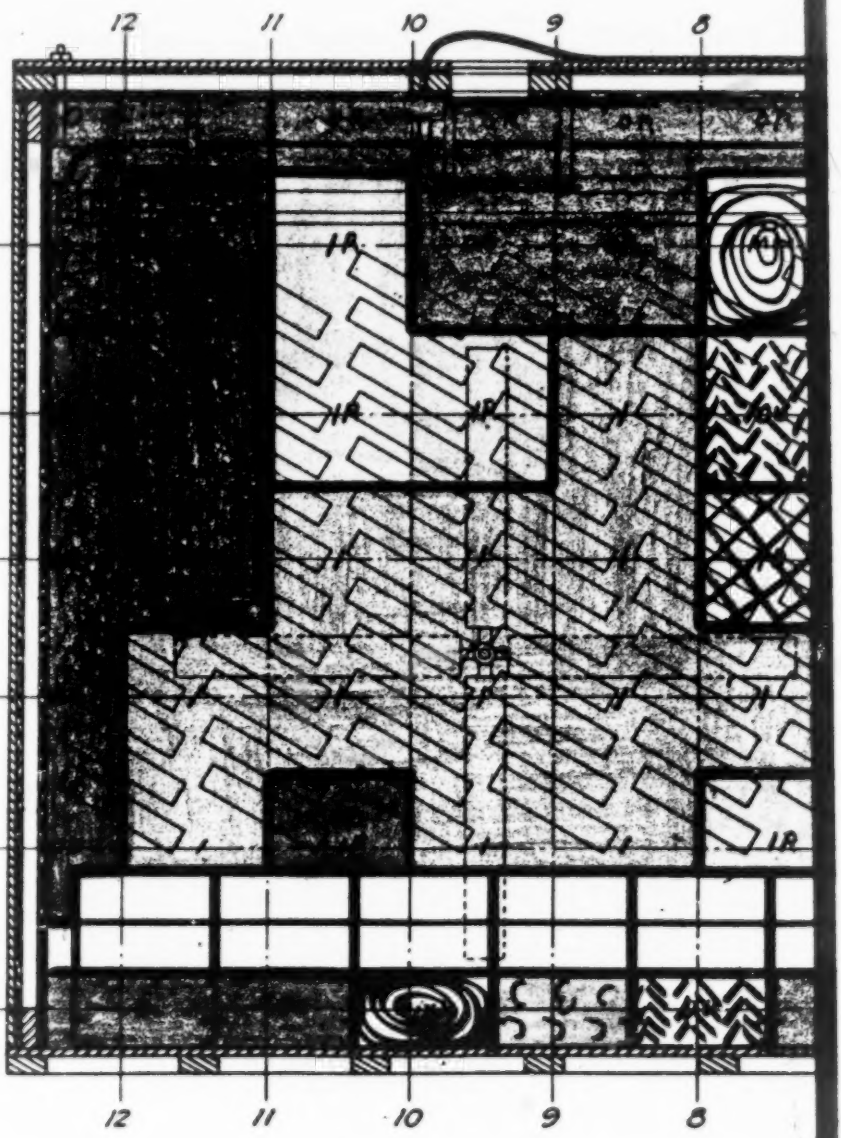

No. 2119 Eq

DATE No14-32

TIME 2:30 B - 2:55

SHEET 2

Data on line D D Test Diagram No1

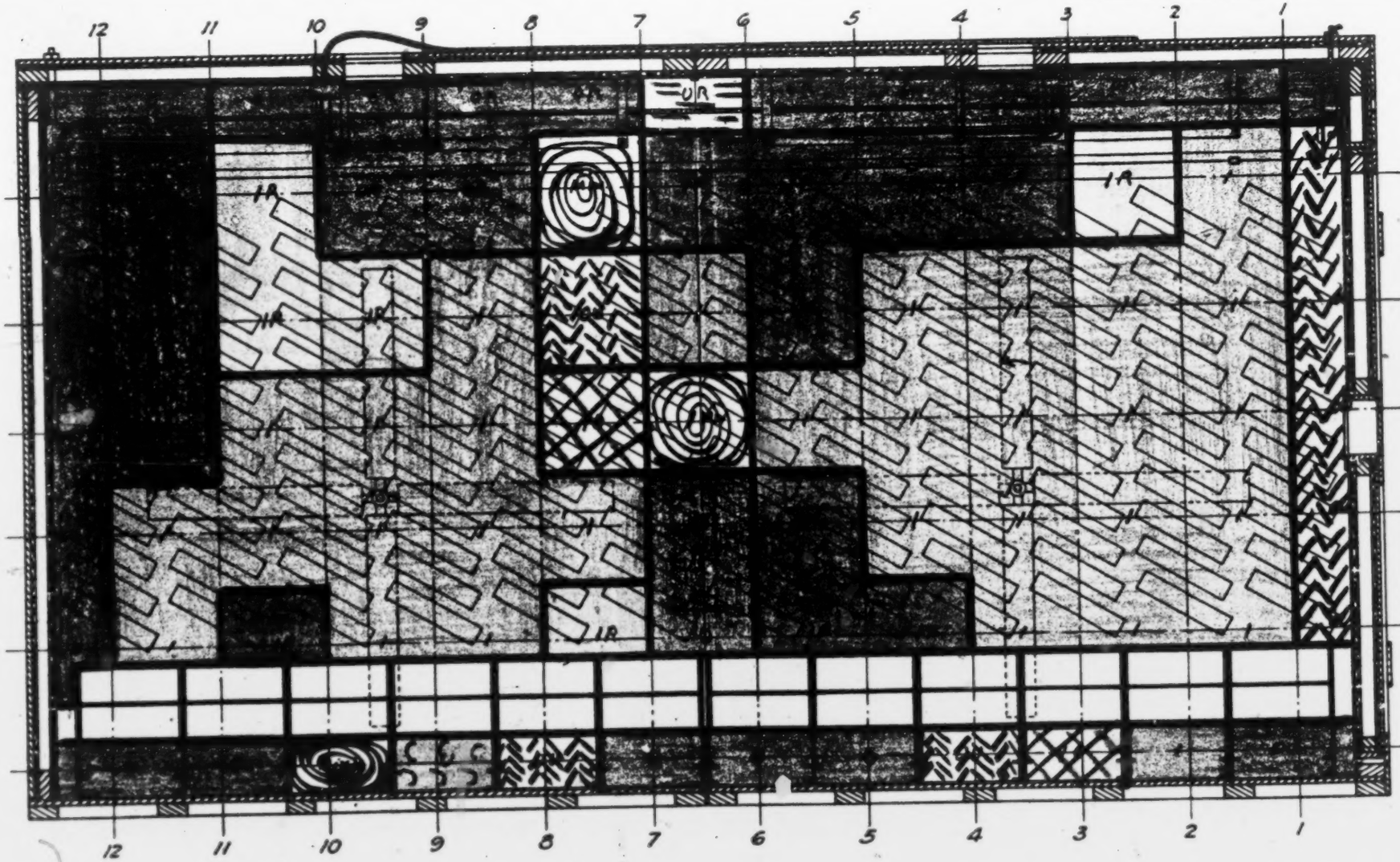

ARGUMENTATIVE DIAGRAM No. 1
ON DEFENDANTS EXHIBIT M-6

TEST DIAGRAM NO.3
SNOW INCUBATOR

Frank B Bowles

COLOR LEGEND:

I-In IR-In Rear IO-In Out OU-Out Up

Data on line D D Test Diagram No 1

TIME 2:30 B - 2:55

SHEET 2

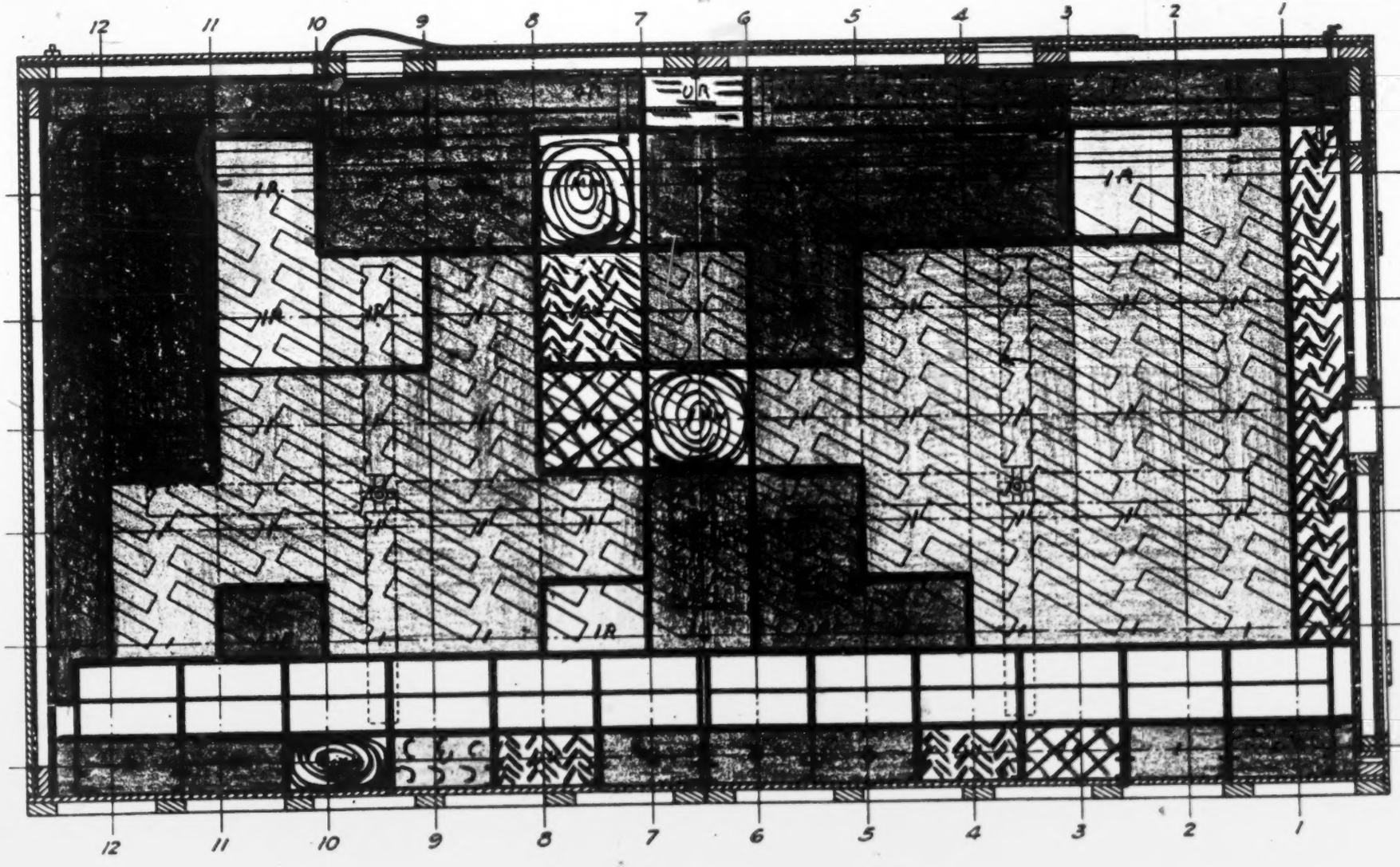

ON DEFENDANTS EXHIBIT M-6

TEST DIAGRAM NO.3

Frank B Rowley SNOW INCUBATOR

COLOR LEGEND:

I - In		IR - In Rear		10 - In Out		OU - Out Up	
O - Out		ID - In Down		OR - Out Rear		UR - Up Rear	
U - Up		IF - In Front		OD - Out Down		MIX - Mix	

ARGUMENTATIVE DIAGRAM No. 2
ON DEFENDANTS EXHIBIT M-2

No. 3119 Eq

DATE Nov. 14 -32

TIME 3 20

SHEET No 1

Data taken on line AA Diagram No 1

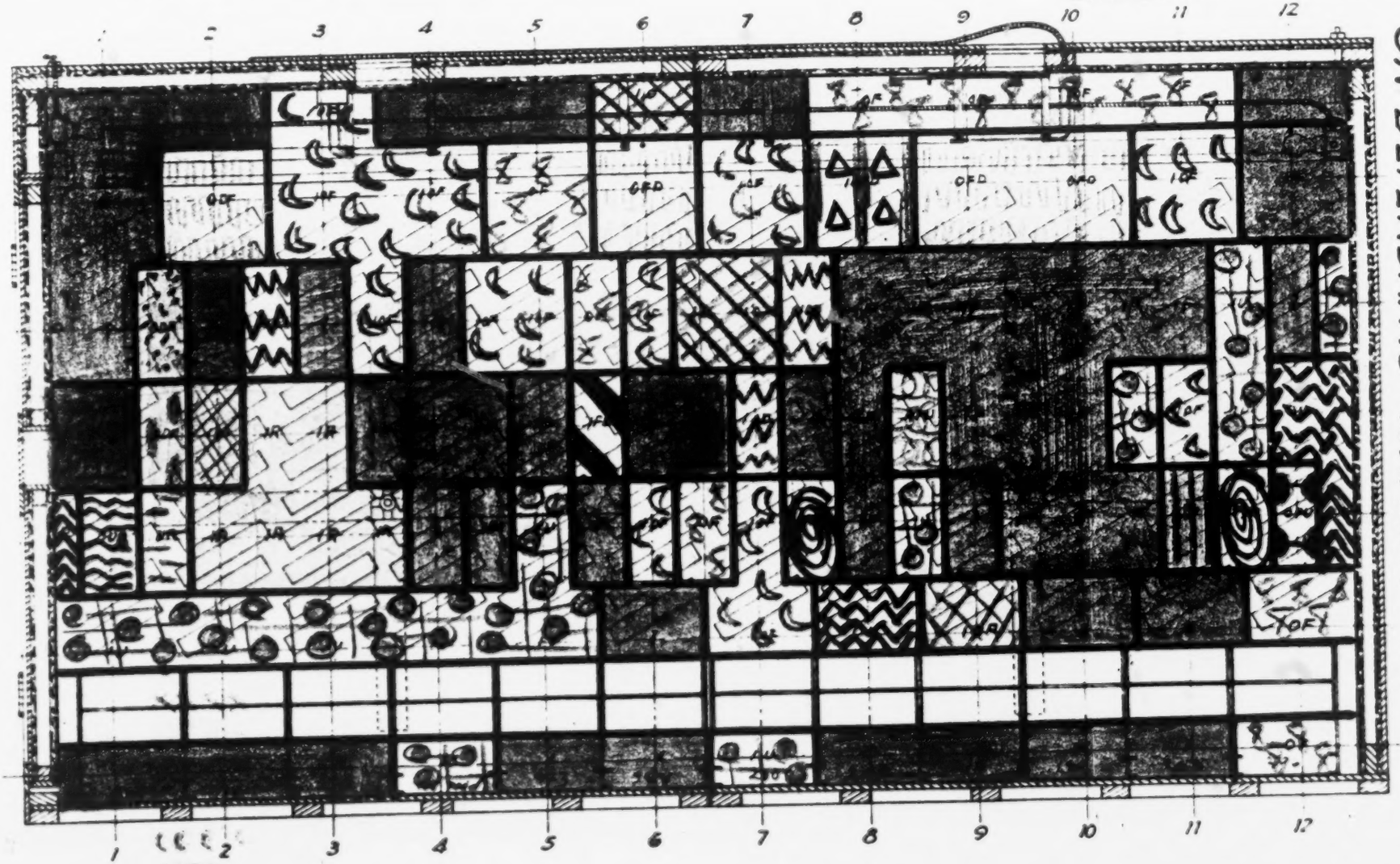

TEST DIAGRAM NO. 2

Frank B. Rowley SNOW INCUBATOR

COLOR LEGEND:

I - In	IU - In Up	IOFD - In Out Front Down	OUR - Out Up Rear
O - Out	IOD - In Out Down	OR - Out Rear	ODR - Out Down Rear

ARGUMENTATIVE DIAGRAM NO. 2
ON DEFENDANTS EXHIBIT M-2

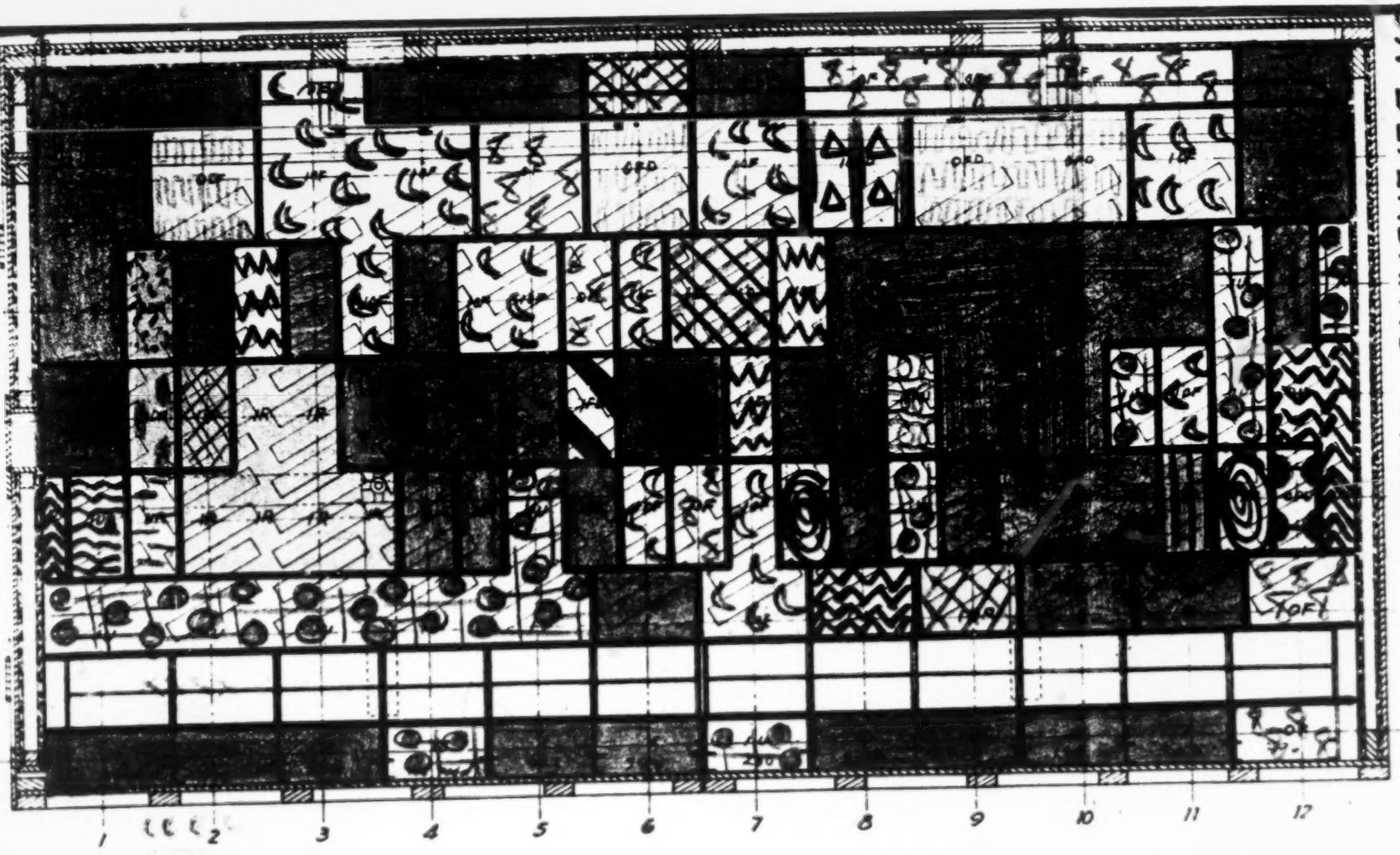

TEST DIAGRAM NO 2
SNOW INCUBATOR

COLOR LEGEND:

I - In
O - Out
U - Up
IR - In Rear
ID - In Down
IF - In Front
IO - In Out
IU - In Up
IOD - In Out Down
IOF - In Out Front
IFD - In Front Down
IOR - In Out Rear
IFU - In Front Up
IDR - In Down Rear
IOFD - In Out Front Down
OR - Out Rear
OD - Out Down
OU - Out Up
OF - Out Front
ODF - Out Down Front
OFU - Out Front Up
OUR - Out Up Rear
ODR - Out Down Rear
UR - Up Rear
UF - Up Front
MIX - Mix

Taggart colored Rowley's test diagrams, Taggart did not color the diagrams to show the true air circulation that Professor Rowley's tests prove. Rowley's tabulations on his test diagrams, Defendant's Exhibits M4 and M6 as well as the tabulations on his other test diagrams, Defendant's Exhibits M2, M3 and M5, show some places where there were straight movements of air in or out from the corridor of the Snow machine. These places where there are straight in and out movements of the air are designated on the test diagrams by the letter "I" designating "in" and the letter "O" designating "out" without other letters. Most of the movements of air through the Snow machine, however, were diagonal movements designated by combination letters, such as "IF," meaning in front; "OU," meaning out up; "IDR," in, down and rear, etc. Where there was a reversal of movement from one instant to the next, this was designated by the letters "IO" in out, or often by any combination of letters such as "IF" which often means that the air fluctuated in its movement from a straight in movement to a straight front movement, etc.

Taggart, in coloring Rowley's test diagrams, Plaintiff's Exhibits M4 and M6, disregarded all diagonal movements of air and many fluctuating or reversal movements of the air and with the exception of the points where letters "IO" are found together or in combination with another letter, he colored every point in the machine where there was an "I" found, with the red crayon irrespective of whether the "I" was combined with one or more other letters or not, and he colored every point in the machine where there was an "O" found, with the blue crayon irrespective of whether the "O" was combined with one or more other letters or not. In other words, he interpreted every movement of air which might be diagonally in and up, diagonally in and front,

diagonally in front and up, etc., and which might be fluctuating from in to front, or from in to up, etc., as a straight in movement and he colored this all red. Further, he interpreted every movement of air which might be diagonally out and up, diagonally out and front, diagonally out front and up, etc., and which might be fluctuating from out to up or from out to front, etc., as a straight out movement, and he colored this all blue. His colors mean nothing to show air movement.

If colors are to be used to show true air movement in the Snow machine by applying these colors to the Rowley test data, Exhibits M1 to M6, then a great many colors and colored patterns must be used to show the different types of air movement throughout the machine. Color should be applied not only to sheets which show the movement of the air in vertical planes approximately midway between the corridor and the two side walls, as Taggart was careful to apply only his color to, but color should be applied to other sheets which show the movement of air in other vertical planes through the egg trays.

Respondents' brief writers have had prepared and have had inserted in this brief, on pages opposite the heading to this section of the brief, two colored diagrams designated respectively "Argumentative Diagram No. 1 on Defendant's Exhibit M6" and "Argumentative Diagram No. 2 on Defendant's Exhibit M2."

In the Argumentative Diagrams No. 1 and No. 2, there has been used a different color, or a different colored pattern, for every different air movement found by Professor Rowley in his *inter partes* tests on the Snow machine and tabulated on Defendant's Exhibits M6 and M2, respectively. A color legend showing the significance of each color or colored pattern is placed on each diagram. The straight in and out

movements have all been colored respectively solid red and solid blue and examination of the solid red and blue colored portions of the two Argumentative Diagrams will show how little true in and out movement there really is in the Snow machine. How far off Mr. Taggart was in interpreting the true air movement in the Snow machine may be gauged by comparing the red and blue portions of the Argumentative Diagrams with the red and blue portions of Plaintiff's Colored Exhibits 22 and 23. A composite view of the air circulation in the Snow machine, when different air movements are properly interpreted by different colors placed on a Rowley test data sheet, looks like a crazy quilt. It is to be remembered in examining the Argumentative Diagrams that every different color used, and every different colored pattern used, designates a different air movement, as shown and explained by the colored legends found on the Argumentative Diagrams. It is submitted that these diagrams correctly visually show by color the true air movement in the Snow machine, if color can be used for showing this movement.

When "Argumentative Diagram No. 1 on Defendant's Exhibit M6" is compared with Plaintiff's Exhibit 23 which was colored by Taggart on Defendant's same Exhibit M6, the contrast between the true air circulation in the Snow machine and the abortive air circulation that Mr. Taggart would like to have believed takes place in that Snow machine, is strongly enough brought out to show that Taggart's theory of air circulation should not be accepted. But Argumentative Diagram No. 1 does not tell the entire story, and for this reason Argumentative Diagram No. 2 is also used. It has been pointed out that Taggart colored up only two of Defendant's Exhibits M1 to M6. He was careful to choose the two Exhibits M4 and M6 that would best support his unwarranted

contention of a general air current moving in defined paths in the Snow machine. He failed to color up any other of Rowley's test data sheets M1 to M6 than the two sheets M4 and M6 which show the air movement in the vertical planes taken on the lines B-B and D-D of Defendant's Exhibit M1. The entire air circulation of the Snow machine must be considered, however, if one is to obtain a true insight into or true knowledge of this air circulation. Why did not Taggart color up one or more of Defendant's Exhibits M2, M3 and M5, instead of coloring up only two sheets showing the air movement in identically the same vertical planes at opposite sides of the machine? Defendant's Exhibits M2, M3 and M5 show the air movement in the near ends of the egg trays, as viewed from the corridor, and in the corridor. To show the colored picture of air circulation at the near ends of the egg trays at one side of the Snow machine, Respondents' brief writers have included, in this brief, "Argumentative Diagram No. 2 on Defendant's Exhibit M2." There are over twenty different types of air movement at this point of the machine, as shown by the different colors and different colored patterns in Diagram No. 2. When this Argumentative Diagram No. 2 is considered, with Argumentative Diagram No. 1 it will be perfectly obvious that there is nothing but a general agitation, mixing and churning movement of the air in the Snow machine, and that there is no current of air moving continuously in defined paths in that machine, in endles cycles.

Plaintiff's colored Exhibits 13 to 13KK, and 22 and 23, are worthless to show the air circulation in the Snow machine and they merely go to show to what unjustified extremes petitioner's self-interested witness, Taggart, went to obscure the true air circulation in that machine before the trial court. The same may be said of the celluloid model,

Plaintiff's Exhibit 14, which was colored by Taggart in conformity to the coloring on Plaintiff's colored Exhibits 13 to 13KK.

Conclusion as to Non-Infringement.

Although it has previously been shown that respondents do not infringe claim 1 of the Smith patent for numerous other reasons, it has now been conclusively shown that respondents in their hatching method do not utilize a general current circulation of air in defined paths or channels, and that, therefore, respondents do not infringe the claim for the reason that they do not use a current of air of the type called for in the claim.

CHAPTER V.

ARGUMENT CONTINUED.

SOME OF THE FALLACIOUS CONTENTIONS IN PETITIONER'S BRIEF.

A number of the fallacious contentions in petitioner's brief have already been exploded. His main contention which underlies his whole argument, to-wit—that in accordance with the Smith disclosure the air moves over and over the eggs in continuous cycles and, therefore, it makes no difference as to the sequence in which the air first strikes the eggs in the different stages of incubation and, accordingly, that the claim is not limited to cover merely a method of incubation wherein the air moves first to the eggs in the advanced stages of incubation and thence to the eggs in the less advanced stages of incubation—has been completely exploded in Chapter III, Sections 1 and 4 of this brief. It was there conclusively established that in accordance with the disclosure of the Smith patent the air does not move in closed cycles, but on the contrary, fresh air in quantity, and moisture are introduced at the beginning of each circuit of air movement and this fresh air and moisture vitalize all the air moving to the eggs for the essential purpose of causing the vitalized air to be carried first to the eggs in the advanced stages of incubation. The claim is, therefore, definitely limited to a method of hatching wherein the air moves first to the eggs in the advanced stages and then to the eggs in the less advanced stages.

There are numerous other fallacious contentions made by petitioner in his brief. Attention will be briefly called to a few of these.

Fallacious Contention That Increasing the Volume and Velocity of Air Circulation Is the Mechanical Equivalent of the Use of Curtains.

Petitioner contends that the fans in respondents' machine are of such capacity and create such a volume of air that they generate the direct and definable current of the claim without the use of means for guiding or directing it (Petitioner's Brief, p. 38). In Chapter IV of the respondent's present brief, it has been conclusively shown that there is no "direct and definable current" in respondents' machine when it is in operation. Even if it were admitted, therefore, as contended for by petitioner, that speeding up the fans in the machine of the Smith patent is the equivalent to utilizing the fans as disclosed in the patent with curtains to direct and guide the air movement, respondents still would not infringe the claim for the reason that the definite and defined air current of the claim is not present in respondents' hatching method.

Respondents, however, vigorously deny petitioner's statement found on page 55 of petitioner's brief that "The increase in volume and velocity" (of the fans) "is the mechanical equivalent of the curtains for it secures the same current movement of air as is secured in Smith." The specification of the patent may be searched in vain in an effort to find any statement or suggestion that an air circulation equivalent to that disclosed could be secured by eliminating the curtains and speeding up the fans. In the same paragraph where the function of the curtains is brought out (patent specification page 2, lines 53 to 78), it is stated that "It is obvious that the fans can be so arranged and can be operated at such speed as to cause the hot air to circulate fast enough to keep the temperature throughout the chamber between the

limits of 100° and 105°," but it is not stated that the curtains can be eliminated to secure the proper air circulation. The chief problem, as brought out in the patent specification, was to carry off the heat from the eggs in the advanced stage of incubation and to do this it was necessary to secure a high velocity of air current about the eggs in the advanced stage of incubation. When the eggs were set in the only manner disclosed in the Smith patent, it was absolutely essential that the curtains be used to carry the current "around and about each egg" of the eggs in the most advanced stages. High velocity to the eggs in the most advanced stages could only be secured by use of the curtains.

The fact that the incubators sold by petitioner's licensees, the Smith Incubator Company, and the Buckeye Incubator Company were always equipped with curtains or corresponding partitions and that these companies always advised the use of curtains or partitions in the commercial machines (R. 78) is convincing evidence that the Smith hatching method could not have been carried out successfully without the use of curtains. Mr. E. H. Snow who had operated all kinds of incubators for years, including a number of the Smith machines, testified (R. 158-159), as follows:

> "Q. As that Smith incubator is organized in the specimen used by you, did you ever attempt to use it without curtains in the corridor?
>
> A. No.
>
> Q. In your judgment, could it be used without those curtains successfully—
>
> A. No.
>
> Q. Why not?
>
> A. Because it would permit to let air go in different directions, and would not reach the bottom stage of in-

cubation, forcing the air around and taking the air from the advanced stage of incubation up through the others, and would be liable to cause what I would term irregularity.

Q. Irregularity in what?

A. In the incubator throughout.

Q. In the hatching?

A. Yes, in all phases of the incubator. It is made with partitions, or with curtains, and they are made there to be used that way, and they have been proven out, that that is the way that they endeavor to run the Smith incubator."

Petitioner's self-interested expert, Mr. Taggart, practically admitted that in the Smith commercial machine the heat could not be taken off the eggs in the most advanced stage of incubation properly, if the curtains in the Smith machine were eliminated. Under direct examination (R. 78) he made the following answer to the following question:

"Q. You are prepared to demonstrate, with the curtains removed, what happens?

A. You would still have air currents up to the egg columns in all points *except in the lower part or the columns near the corridor,* and there the fan current would be going down for a short distance, that is, near the bottom of the curtains, and then curving back up, but with the curtains we get a little more uniform and better distribution of the air in the back corners of the machine."

Taggart, in his above statement, made it clear that there would be little or no movement about the eggs in the lower parts of the machine or the eggs near the corridor with the curtains removed. As a result, the heat could not be re-

moved from the eggs in the most advanced stages or the proper air circulation given to the eggs near the corridor of the machine. This confirms what Mr. Snow stated in his testimony above quoted.

However, this question as to the equivalency of fan speed and curtains or partitions in the corridor of the Smith machine is not really involved in the issues here before the Court.

If the relied upon claims can, by any possibility, be treated as valid, they must be given the narrow interpretation and scope accorded thereto in the Petersime case, the Blum case, and the Hillpot case, and also be further limited by including Smith's special peculiar form of stage incubation, wherein the said eggs were shifted successively downward, as pointed out in Chapter III of this brief. When so construed, it is perfectly clear that if the curtains or partitions are removed from the corridor, Smith's alleged method of hatching eggs cannot be carried into effect by any such a machine, even if the fans were speeded up to a greater speed than used in the Smith commercial machine.

Fallacious Contentions That the Claim Should Be Given a Broad Interpretation Because Smith Was a Pioneer Inventor and Because of the Commercial Success of Petitioner's Incubator Business.

On page 5 of petitioner's brief, petitioner contends that Smith was the first one to use, in a practical way, the heat developed by eggs in the advanced stages of incubation for supplying heat to the eggs in the less advanced stages, so as to stabilize the heat in a chamber wherein eggs in both advanced stages and less advanced stages were placed. In spite of this contention, it is admitted, pages 46 to 50, of peti-

tioner's brief, that the patents to Stulik, Winkler and Zimmer and the article disclosed in Ure's Dictionary and relating to the Bonnemain incubator, each discloses a hatching method wherein eggs at different stages of incubation are placed in the same chamber. Of necessity, therefore, in the hatching methods disclosed in these prior patents and publication, heat from the eggs in the advanced stages must have been transmitted to the eggs in the less advanced stages both by radiation and convection currents. We need look no further through the prior art than to Smith's own prior public usage during the years 1913 and 1914, at Cleveland, Ohio, to find air circulated by fans in a closed chamber containing a large number of eggs. All that Smith did at most, when the prior art is considered, was to discover that by use of a shifting and grouped type of stage incubation of the same order as that disclosed in the Winkler patent, he could hatch eggs by utilizing curtains or equivalent partitions to direct a current of air, forced by fans of the type he used in his old prior art machine, through the eggs arranged in his type of stage incubation in columns first to the eggs in the advanced stage and then to the eggs in the earlier stage.

It is not denied but that Smith made a commercial success out of his incubator business. But this may be attributed as much to his good management as to anything else. There is no evidence in the case to show that manufacturers of other incubators, wherein stage incubation and forced draft were used, did not enjoy a large commercial success in spite of the many suits brought under the Smith patent. The fact that usages of the Petersime machine, the Blum machine and the Hillpot machine, in all of which stage incubation and forced draft were present, were declared not to infringe the patent, indicates clearly that Smith had no monopoly on the business of selling or using incubators utilizing stage incuba-

tion and forced draft and that other such incubators were commercially in use.

Petitioner is not entitled to a broad interpretation of claim 1 of his patent either because of his alleged invention or because of the fact that he made a commercial success out of his incubator business. He is entitled only to the narrow interpretation of the claim given by the C. C. A. Eighth in the instant case.

GENERAL CONCLUSION.

It has now been conclusively shown that the Circuit Court of Appeals for the Eighth Circuit did not err in holding that respondents had not infringed claim 1 of the Smith patent in suit; in dismissing the complaint; reversing the decree of the District Court; and in refusing the relief prayed for in the bill of complaint.

It has also been conclusively shown that the Circuit Court of Appeals for the Eighth Circuit did not err in restricting claim 1 of the patent to a definite order or arrangement of eggs.

The Circuit Court of Appeals for the Eighth Circuit did not restrict claim 1 of the patent in suit to the precise arrangement of eggs described in the specification of the patent and although one of the errors alleged to have been assigned and to be argued in petitioner's brief was to the effect that the said Court had erred in restricting claim 1 of the patent in suit to the precise arrangement of eggs described in the specification of the patent, there is no basis in fact for assigning such an error because it was not stated by petitioner that such an assignment of error was to be urged at the time the petition for writ of certiorari was filed.

It has, therefore, been shown that none of the errors that could properly have been urged by petitioner, were made by the Circuit Court of Appeals for the Eighth Circuit.

It is, accordingly, respectfully submitted that the decree of the Circuit Court of Appeals for the Eighth Circuit should be affirmed, with costs to respondents.

Dated this 21st day of November, 1934.

Respectfully submitted,

JAMES F. WILLIAMSON,
RALPH E. WILLIAMSON,
Counsel for Respondents.

APPENDIX.

PRIOR ADJUDICATIONS OF THE SMITH PATENT 1,262,860 IDENTIFIED.

Buckeye Incubator Co., et al., vs. Wolf, D. C. N. D. Ohio, May 9, 1923, 291 F. R. 253:

Two of Smith's patents were sued upon, including the one here in suit as to claim 1 as well as other claims thereof. The decision was by Judge Westenhaver and he held all the claims to be valid and to have been infringed. However, he made no effort to determine the exact meaning and scope of the relied upon claims. On the contrary, said Judge, on page 256 of the reported decision, made the following statement, to-wit:

> "The claims need not be specifically stated. No question of invention or infringement turns on a close construction of all or any of the claims."

Wolf vs. Buckeye Incubator Co., et al., C. C. A. 6th, March 4th and April 11th, 1924, 296 F. R. 680:

The decree of the trial court by Judge Westenhaver was affirmed without any effort on the part of the Circuit Court of Appeals to determine the exact meaning and scope of the relied-upon claims 1 and 2 of the Smith patent.

Buckeye Incubator Co. vs. Cooley, D. C. N. J., Apr. 23rd, 1925, unreported:

The decision of the trial court in this case was rendered by District Judge Bodine. The method claims of the Smith patent 1,262,860, were in issue and held valid and infringed, but no effort was made to determine the exact meaning and scope of said claims.

Buckeye Incubator Co., et al., vs. Cooley, C. C. A. 3rd, Feb. 8th, 1927, 17 F. R. (2) 453:

The trial court was here affirmed as to the validity and infringement of the method claims 1, 2 and 3 of the Smith patent 1,262,860, but no effort was made to determine the exact meaning and scope of said claims. The decision of said Circuit Court of Appeals was written by Circuit Judge Wooley, who also wrote the decision of said Court in the Hillpot case, 24 F. R. (2) 341, and he, in the first sentence of the third paragraph on page 342 of that decision, made the following remark in respect to the Cooley case, to-wit:

> "In the Cooley case, infringement was so plain there was no occasion to construe the claims."

A similar remark, applying both to the Wolf case and the Cooley case was made by Judge Westenhaver in his decision in the Blum case, 17 F. R. (2) 456, wherein on page 457, he made the following statement (Italics ours):

> "Defendant uses an incubator known as the Aero, made by the Aero Incubator Company, Springfield, Ohio. The question in this case is whether the hatching method of this apparatus is an infringement. It is an open question now to be determined *for the first time.* In the former litigation, the apparatus held to infringe was an exact copy of Smith and it was unnecessary to determine with exactness the scope of the method claims. It was then said: 'No question of invention or infringement turns on a close construction of all or any of the three claims.'"

Buckeye Incubator Co., et al., vs. Stone, D. C. Oregon, unreported. Master's Report filed Jan. 26, 1926:

This case was tried before a Master-in-Chancery and no

serious attempt was made to determine the exact meaning of the claims of the Smith patent. The patent was declared valid and infringed.

Buckeye Incubator Co., et al., vs. Boling, D. C. Indiana, Feb. 8, 1926, unreported:

This case was tried before Judge Thomas W. Slick who dismissed the plaintiff's bill of complaint for non-infringement. The case, although not reported, was referred to in the decision of District Judge Hough in a later case entitled *Boling vs. Buckeye Incubator Co., et al.,* D. C. S. D. Ohio, May 18, 1929, 33 F. R. (2) 347, wherein the structure and mode of operation of the Boling incubator involved in the said Indiana case was described on pages 340-351 of Judge Hough's decision.

Buckeye Incubator Co., et al., vs. Petersime, et al., D. C. Ohio, Sept. 17, 1926, unreported:

The case was tried before Judge Hickenlooper and he rendered an oral decision and approved a written memorandum thereof Sept. 17, 1926. From the decision of the C. C. A. for the Sixth Circuit 19 F. R. (2) 721 on the same case, it is clear that method claims 1, 2 and 3 of the Smith patent were in issue.

Judge Hickenlooper made an extensive review of the prior art then before him and indicated that, in his judgment, Smith had made no contribution to that art involving patentable invention but being constrained by a prior decision of the Circuit Court of Appeals for the same Circuit, he treated the said claims as valid, but held, that when distinguished from the prior art the claims in issue were of narrow scope and distinguished from the method of hatching eggs practiced by defendant in that case and dismissed the bill for non-infringement. In the next to the last paragraph of

Judge Hickenlooper's decision, he made the following statement:

> "* * * the patentee has voluntarily, and apparently, with reliance upon the idea that it was a marked step forward, included in each of his process claims the element of sequence in which the heated air would be applied to the eggs, first, to those of the most advanced stage of incubation, and last to those just placed in the incubator.
>
> "This element of the process is entirely lacking in defendant's device. There is no definite defined sequence *of applying the air currents; the eggs are all* in one chamber in which the air is thoroughly mixed and the heat is applied uniformly alike to all stages of incubation.
>
> "Under those circumstances we are constrained to hold whether viewed as a combination patent or as a process that there is no infringement."

Buckeye Incubator Co., et al., vs. Petersime, et al., C. C. A. 6th, June 10th, 1927, 19 F. R. (2) 721:

The hearing was before Circuit Judges Dennison, Moorman and Knappen. Circuit Judge Moorman wrote the decision. In said decision the said Circuit Court of Appeals for the Sixth Circuit did carefully consider and construe the method claims 1, 2 and 3 of said Smith patent and affirmed the trial court. In said decision said Circuit Court of Appeals pointed out the differences between the three method claims in issue and then, respecting claim 1, made the following statement:

> "It is thus to be seen that all of the claims call for a current of heated air limited in claims 2 and 3 to power-driven and vertically directed. The question is whether

the broader phrase of claim 1, 'applying a current of heated air' includes the agitation of air, not in defined current but so that it will produce a diffusion of heat units resulting in uniformity of temperature.

"Looking to the language of the claims, as indeed to the device that Smith uses, it would seem that he had in mind a process by which the warm air taken into the corridor would be currently directed, so as to strike first the eggs in the more advanced incubation, take to them the additionally needed oxygen, and carry the heat units therefrom to other parts of the two compartments, thus effecting in part, at least, a uniformity of temperature throughout the egg chambers. This interpretation, we think, is borne out by the specification."

Then after making some specific references to the specification of the Smith patent, the said Circuit Court of Appeals made the following statements:

"The file-wrapper history of Smith's patent tends to support the same conclusion. This conception of a current of air driven in a definite or predetermined direction is different, we think, from the Petersime process, by which diffusion of heat units and uniformity of temperature is obtained by the slow stirring or agitation of the air in the egg chamber.

"Judgment affirmed."

Buckeye Incubator Co., et al., vs. Blum, D. C. N. D. Ohio, Feb. 14, 1927, 17 F. R. (2) 456:

The decision was written by District Judge Westenhaver. Claims 1 and 2 of the Smith patent 1,262,860 were held valid, but to be of such narrow scope, when distinguished from the prior art and the estoppels arising from the file-wrapper record that they were not infringed by the defendant's

method of hatching eggs and the bill of complaint was dismissed.

Buckeye Incubator Co., et al., vs. Blum, C. C. A. 6th, July 6, 1928, 27 F. R. (2) 333:

The hearing was before Circuit Judges Dennison and Moorman and District Judge Anderson. The trial court's holding of infringement was affirmed on the single ground that in the usage of the Blum machine Smith's current was not employed. Said C. C. A. did not pass on the question as to whether or not claim 1 of the patent was otherwise limited as held by the trial court.

Buckeye Incubator Co., et al., vs. Hillpot, D. C. D. N. J., Aug. 4, 1927, 22 F. R. (2) 855. Decision by District Judge Bodine:

Claims 1 and 2 of Smith patent 1,262,860 were in issue and held to be of narrow scope when distinguished from the prior art and the estoppels arising from the file-wrapper record and although treated as valid, were held not infringed by the defendant's method of hatching eggs and plaintiff's bill was dismissed.

Buckeye Incubator Co., et al., vs. Hillpot, C. C. A. 3rd, Feb. 10, 1928, 24 F. R. (2) 341:

The hearing was before Circuit Judges Buffington, Wooley and Davis. The opinion was written by Circuit Judge Wooley. Careful independent effort was made to determine the true meaning of the method claims of said Smith patent and the trial court was affirmed.

Buckeye Incubator Co., et al., vs. F. & H. Hatchery, et al., D. C. S. D. Illinois, Nov. 30, 1928, unreported:

In this suit the patent was declared not infringed. Defendant in the suit had purchased incubators from the pat-

entee's licensee and had merely increased the capacity of these incubators.

Boling vs. Buckeye Incubator Co., et al., D. C. S. D. Ohio, Western Div., May 18th, 1929, 33 F. R. (2) 347:

This was a suit to restrain the defendants from bringing suits against plaintiff's customers in view of the prior adjudication in the Indiana case identified above, and the prayed-for injunction was granted. The structure of the Boling incubator involved in the said Indiana case is described on pages 350 and 351 of this decision.

Buckeye Incubator Co., et al., vs. Boling, C. C. A. 6th, Feb. 13, 1931, 46 F. R. (2) 965:

The trial court was reversed as to injunction and injunction dissolved.

Buckeye Incubator Co., et al., vs. Miller Hatcheries, Inc., D. C. E. D. Mo., March 6, 1929, unreported:

All of the claims of Smith patent 1,262,860, and 1,263,138, were in issue and held valid and infringed. Defendant's machines in that case, however, were simply original Smith machines which had been modified to get increased capacity and the trial court held this was not a matter of legitimate repairs but a reorganization in accordance with the Smith patent.

Miller's Hatcheries, Inc., et al., vs. Buckeye Incubator Co., et al., C. C. A. 8th, May 19th, 1930, 41 F. R. (2) 619:

The hearing was before Circuit Judges Booth and Gardner and District Judge Sanborn. The decision was written by Judge Booth. The trial court was affirmed. Under the doctrine of comity, the claims in issue were treated as valid because of the prior adjudications thereof and no attempt, whatever, was made to determine and state the exact mean-

ings and scope of claims 1 and 2 of the Smith patent 1,262,860 in suit.

Samuel B. Smith, et al., vs. Waxham, D. C. S. D. Cal., Central Division, June 30, 1932, unreported:

This was the decision by the District Court in the Waxham case now before the Supreme Court on writ of certiorari. The case was tried before a Master and the District Judge, Judge McCormick, approved the Master's report in his order of June 30, 1932. Claims 1 and 2 of Smith patent 1,262,860, were held valid and infringed, but the Court admitted that the question of infringement was a close one. His own words on that point are as follows:

> "The only debatable issue here is that of infringement because of the limitation as to order of eggs within the incubator under a proper interpretation of claim 1 of the Smith patent 1,262,860. *I believe this question to be close.*"

Samuel B. Smith and Buckeye Incubator Co. vs. Jensma, Smith & Nampa Hatcheries, D. C. Idaho, Oct. 7, 1931, Vol. 1 Fed. Sup. 999:

Claims 1 and 2 of the Smith patent 1,262,860 were here held valid and infringed; but no attempt was made to determine the true meaning of said claims when distinguished from the prior art and the estoppels arising from the file-wrapper record of the patent. The second paragraph of the said decision includes statements to the following effect (Italics ours), to-wit:

> "* * * the issue of non-infringement is presented by the pleadings under the claims sued on. *No evidence was offered by the defendants* to refute the undisputed testimony of the plaintiffs, which clearly shows that the defendants have made and are using incubators embody-

ing the inventions shown in plaintiff's patent, particularly, claims 1 and 2 thereof, in infringement of its rights."

Then the last paragraph of said decision reads as follows (Italics ours):

> *"No accounting for profits or awards for damages* are requested by the plaintiffs as they were waived at the trial and the relief granted is the prayer of plaintiffs for an injunction."

From said quoted statements it is perfectly obvious that this was really not a contested case, but a case conducted practically with the consent of both parties for what amounts simply to a consent decree. It has the earmarks of a collusive suit. Obviously it has no weight as to the meaning and scope of claim 1 of the Smith patent 1,262,860 there in suit.

FILE COPY

Office Supreme Court,
FILED
FEB 12 193
CHARLES ELMORE CR

Supreme Court of the United States

OCTOBER TERM, 1934.

No. 102.

SAMUEL B. SMITH,

Petitioner,

vs.

E. H. SNOW AND E. H. SNOW, DOING BUSINESS AS SNOW'S HATCHERIES AND SNOW'S INCUBATOR CO., *Respondents.*

PETITION FOR REHEARING.

RALPH E. WILLIAMSON,
GEORGE F. WILLIAMSON,
Counsel for Respondents.

Hayward Brief Co., 601-7 Fourth Ave. So., Minneapolis

SUBJECT INDEX.

		Page
I.	Staged Incubation Is Not One of the Recited Method Steps of Claim 1, and Cannot Be Included in the Claim Unless the Staged Incubation of the Specification Is Incorporated by Reference Into the Claim	1
II.	The Smith Invention Is at Most But an Improvement Invention and the Claim Is Not Open to a Broad Interpretation as in the Case of a Generic Invention	5
III.	Respondents' Air Movements	7
IV.	Effect of Opinion on Industry	10
V.	Request for Court to View Machine Exhibits in Operation	13
	Appendix	15

TABLE OF CASES CITED.

Buckeye Incubator Co. vs. Blum, D. C. N. D. Ohio, 17 Fed. (2d) 456 9
Buckeye Incubator Co. vs. Blum, C. C. A. 6th, 27 Fed. (2d) 333 ... 10
Buckeye Incubator Co. vs. Hillpot, C. C. A. 3rd, 24 Fed. (2d) 341 ..... 9, 10
Buckeye Incubator Co. vs. Petersime, D. C. S. D. Ohio, unreported. 8
Buckeye Incubator Co. vs. Petersime, C. C. A. 6th, 19 Fed. (2d) 721 ..... 9, 10
Holland Furniture Co. vs. Perkins Glue Co., 277 U. S. 245 3
Mitchell vs. Tilghman, 19 Wall. 287 3
Motion Picture Patents Co. vs. Universal Film Mfg. Co., 243 U. S. 502 5
Sargent vs. Hall Safe & Lock Co., 114 U. S. 63 ..... 3, 5
Seymour vs. Osborn, 11 Wall. 516 ..... 3, 5
Singer Co. vs. Cramer, 192 U. S. 265 ..... 3, 5
Smith vs. Goodyear Dental Vulcanite Co., 93 U. S. 486 3
Snow vs. Lakeshore Railroad Co., 121 U. S. 617 ..... 3, 4
Snow vs. Smith, C. C. A. 8th, 70 Fed. (2d) 564 8
Westinghouse vs. Boyden Power Brake Co., 170 U. S. 537 ..... 3, 5
White vs. Dunbar, 119 U. S. 47 5

Supreme Court of the United States

OCTOBER TERM, 1934.

No. 102.

SAMUEL B. SMITH,

Petitioner,

vs.

E. H. SNOW AND E. H. SNOW, DOING BUSINESS AS SNOW'S HATCHERIES AND SNOW'S INCUBATOR CO., *Respondents.*

PETITION FOR REHEARING.

Come now the above named respondents, Snow and Snow, and present this, their petition for a rehearing of the above entitled cause, and, in support thereof, respectfully show:

That a rehearing of this case and consequent reconsideration of this learned Court's opinion and decree rendered on January 7th, 1935, should be granted, we submit, because of the following, among other, reasons:

I. Staged Incubation Is Not One of the Recited Method Steps of Claim 1 and Cannot Be Included in the Claim Unless the Staged Incubation of the Specification Is Incorporated by Reference Into the Claim.

A. In the said opinion, claim 1 has been treated as containing and expressing staged incubation *as a part thereof.* On page 5 of the opinion, it is stated "that the claim, *stand-*

ing by itself, asserts the essential elements of the method of incubation to be: (a) the arrangement of the eggs at different levels *in staged incubation* in a closed chamber, * * *" (Italics ours). But, may it please the Court, there is no recital in claim 1 of staged incubation as a positive step or act in the method recited therein.

In the opinion, page 3, the Court defines staged incubation as "the successive setting of eggs in the same cabinet at brief intervals, of about three days."

Apparently, the passage in the forepart of the claim, "hatching a plurality of eggs by arranging them at different levels * * *" has been treated in the Court's opinion as defining staged incubation as a part of the steps or acts of the method stated in claim 1. But this quoted passage in the claim does not refer to staged incubation; it is completely satisfied by setting, all at one time, eggs of the same age at different levels in the chamber, as distinguished from setting eggs all at one or a single level. It applies simply and solely to placing the eggs at different levels, an arrangement commonly practiced in the old art. See, for instance, patents to Bassini, *et al.*, 330,457, of Nov. 17, 1885 (R. 624); Bell, 691,837, of Jan. 28, 1902 (R. 656); Koons, 916,454, of March 30, 1909 (R. 690); Van Keuren, 1,160,793, of Nov. 16, 1915 (R. 720); and the Bonnemain incubator disclosed in the Ure's Dictionary Article, published in 1867 (R. 809). See the eggs shown in different levels.

Nowhere else in the claim, in the *positive* recital of the essential steps of the hatching method defined, is the setting of eggs in staged incubation specified or implied.

B. The only mention in the claim of staged incubation is in the "whereby" clause *which does not purport to state any step or act of the method.* In the recital of the active steps of the method in the body of the claim, there is no

antecedent for the use of the words, in the whereby clause "more advanced stage of incubation" and "less advanced stage." The whereby clause is merely a functional clause stating the results that must necessarily be accomplished by carrying out the various positive steps in the defined method. Yet the results of the whereby clause in claim 1 of the Smith patent cannot be accomplished, if, taking the claim, standing by itself, all the positive steps specified in the claim, are practiced.

C. Taking the recited positive steps of the claim alone, without implying anything into the claim from the descriptive part of the specifications, *i. e.*, without inferentially including the staged incubation of the specifications into the claim, the claim is completely anticipated by the method of hatching eggs publicly and commercially practiced by the patentee Smith at Cleveland, Ohio, in his Attica built incubator during the years 1913 and '14, more than two years before he applied for his patent. (See Smith's testimony, R. 134-137, also see Part II of this Petition.)

D. Therefore, if the claim is to be saved from invalidity, either because it does not recite sufficient steps to perform the function specified in the whereby clause, or to distinguish from the prior art usage by the patentee Smith, the staged incubation of the descriptive part of the specification must be carried into the claim by inference. The Courts often construe into a claim the descriptive portion of the specification where this is necessary to sustain the validity of the claim.[1]

---

[1] Seymour vs. Osborn, 11 Wall. 516, 547; Mitchell vs. Tilghman, 19 Wall. 287, 391-392; Smith vs. Goodyear Dental Vulcanite Co., 93 U. S. 486, 493-494; Sargent vs. Hall Safe and Lock Co., 114 U. S. 63, 85-86; Snow vs. Lakeshore Railroad Co., 121 U. S. 617, 630; Westinghouse vs. Boyden Power Brake Co., 170 U. S. 537, 555, 568, 569; Singer Co. vs. Cramer, 192 U. S. 265, 284; Holland Furniture Co. vs. Perkins Glue Co., 277 U. S. 245.

In the Court's opinion, page 7, the *Snow vs. Lakeshore Railroad Co.* case is cited with approval to show that the claim of a patent may incorporate the specifications and drawings by reference and thus limit the patent to the form described in the specifications. But this Honorable Court did not interpret the claim as carrying the staged incubation of the specifications into the claim by reference, in accordance with the stated rule of law, by reason that the Court overlooked the fact that staged incubation was not recited as one of the steps of the method in the claim.

From the inaccurate condition of claim 1, it results that staged incubation is *not properly and actually a step or feature of the claim* unless the type of staged incubation disclosed in the descriptive portion of the specification is *inferentially* implied into the claim.

E. The one and only staged incubation disclosed in the descriptive portion of the specification is that wherein the eggs are successively set and shifted during the incubating period and the eggs are grouped so that the eggs in the more advanced stages are grouped together and the eggs in the less advanced stages are grouped together—a type of staged incubation admitted by petitioner Smith not to be used in the Snow hatching method. That the patentee Smith intentionally limited his invention on his method to the shifting and grouped type of staged incubation and that no other method of staged incubation was contemplated by him to be within the scope of his patent is clearly shown by statements appearing in the patent specification, page 1, lines 19 to 40 (R. 429), and page 2, lines 79 to 96 (R. 430).

That the shifting and grouped type of staged incubation of the patent specifications must be inferentially included in the claim, if it is possible to find staged incubation at all, is

all the more obvious for the reason that the claim refers back to the specification by reason of termination of the whereby clause in the words *"for the purpose specified."*[1]

Where a patentee has intentionally limited himself in the specifications or claims, he is bound by these limitations.[2]

II. The Smith Invention Is At Most But an Improvement Invention and the Claim Is Not Open to a Broad Interpretation as in the Case of a Generic Invention.

Referring to Smith's prior public use practiced at Cleveland, Ohio, more than two years before his application was filed, this learned Court said (p. 12 of its opinion) "* * * there was no staged incubation * * *" employed by Smith. *This was made the sole difference between the prior public use and claim 1 of the Smith patent* in the interpretation given the claim by the Court. Therefore, we beg to submit that Smith's patent and his claim 1 are not, and cannot be, in the class of generic inventions. This Court found (opinion, p. 12) that the patents to Stulik, Winkler and Zimmer and the article from Ure's Dictionary, relative to the Bonnemain Incubator, disclosed the practice of setting eggs in staged incubation in the old art. Therefore, the later adoption by Smith for use in his prior art hatching method, of such a practice, was not the discovery or creation of a broad, generic invention or method, but at most only the selection from the prior art of a feature which would improve his method—already otherwise public prop-

---

[1] Seymour vs. Osborn, 11 Wall. 516, 547; Sargent vs. Hall Safe & Lock Co., 114 U. S. 63, 86; Westinghouse vs. Boyden Power Brake Co., 170 U. S. 537, 568; Singer Co. vs. Cramer, 192 U. S. 265, 284.

[2] White vs. Dunbar, 119 U. S. 47; Motion Picture Patents Co. vs. Universal Film Mfg. Co., 243 U. S. 502, 510.

erty by reason of such public use. All that Smith did, unless he is confined to the staged incubation of the specifications of the Smith patent, was to refrain from setting all the eggs at one time in his prior public use machine and to set eggs at different times in this same machine. This was something any hatchery man, using merely common sense, would obviously do if sufficient eggs were not available to fill the prior use machine at the time of the first setting, and eggs for hatching became successively available after the first setting and before the first set eggs had hatched. Smith merely added old staged incubation which, in itself, was public property and a practice commonly known to hatchery men, to what he had made public property by his own act. Literally, such is the situation, as it appears from the learned opinion of this Court.

For these potent reasons, we beg to submit that claim 1, aside from its inherent infirmities, pointed out above, should be taken out of the generic class and placed, where the prior art and the circumstances of the case seem clearly to put it, in the improvement class where it, at best, would have only a definite and limited scope in accord with the specifications and the actual conditions therein specified.

This is further true for the reasons specified in section I herein, and for the further reason that petitioner Smith's brief writers (Petitioner's Brief, p. 6) distinguished the air current of the claim from air bodies in a state of mere agitation through disclaimer.

III. Respondents' Air Movements.

At pages 13 and 14 of the Court's opinion in this case, it sets forth its conception of the air movements in respondents' machine concluding: "It is enough that there is a movement of air *in current form* following substantially defined paths through the tiers of egg trays, sufficient to effect the desired transfer of heat units." (Italics ours.) This statement involves, we beg to submit, a misapprehension that the respondents' air movements are "in current form" *when* passing "through the tiers of egg trays."

The Court states (opinion, p. 14), that the air movements from the propellers are "toward the top and bottom and sides of the chamber, thence to the corridor and thence through the tiers of egg trays back to the propellers." But this statement overlooks the effect that the air, moved from the tips of one propeller at one side of the chamber, has on the air moving from the tips of the other propeller at the same side of the chamber, and also the effect that the air moved by the two propellers at one side of the chamber have on the air moved by the two propellers at the opposite side of the chamber. As the two propellers at the same side of the chamber revolve in the same direction, air moved tangentially by the adjacent blades of the propellers, due to the centrifugal action of the same, moves in opposite directions so that air moved by one propeller strikes air moved by the other to cause nothing but a churning, stirring and agitating movement of this air. A large body of this churning and stirring air in agitation moves through the egg trays from the propellers by reason of the fact that the tips of the propellers throw this air into the trays not only at the central parts of the trays, fore and aft the chamber, but also elsewhere. Also, when the air movements come from

the two propellers at one side of the incubator in one direction and from the two propellers at the opposite side of the incubator in an opposite direction along the "top and bottom and sides of the chamber" *and meet each other in the corridor, opposing movements clash and result in a churning, stirring and agitating effect. The air is in this mixed and agitated condition when and as it permeates through and between the tiers of egg trays.* This means that the heat units are carried, *not by air currents* but by air in undefined *commotion and agitation.*

The Circuit Court of Appeals for the Eighth Circuit, after viewing the Snow machine in operation in its court room at St. Louis, Mo., so found as a fact where it stated in its opinion, 70 Fed. (2nd) 564, 568 (R. 991), as follows: "Appellants' device is based on an entirely different method * * *. As to the air currents, the arrangement is different. * * * In appellants' device, the conception and operation is a wide, general diffusion of air * * *." And petitioner at page 6 of his brief, in this Court, distinctly distinguishes his forced air currents "from any mere agitation of the air," adding: "It is only by the combination of these two essential elements of staged-incubation *and forced draft* that the invention is accomplished." Thus the simple fact is that in respondents' machine the method there employed is devoid of an air current which passes through and amongst the egg trays. There is no current of air within the meaning of the claim, but only agitated, churned bodies of air surrounding and permeating the egg trays in respondents' incubator.

Judge Hickenlooper held, in *Buckeye Incubator Co. vs. Petersime,* that air in agitation, as distinguished from "forced drafts" was not within the Smith patent, but was in a different school of thought and practice, and he was affirmed by the Sixth Circuit Court of Appeals, 19 Fed. (2nd)

721, Judges Denison, Moorman and Knappen, and, may we say, than Judge Denison, few Judges have had greater attainments in this technical class of litigation. Again, in *Buckeye Incubator Co. vs. Blum,* 17 Fed. (2nd) 456, Judge Westenhaver likewise held that hatching methods employing air in mere agitation were not within the Smith patent, but constituted a different system beyond the limitations of the Smith patent to "a current of air." And he too was affirmed by the Circuit Court of Appeals for the Sixth Circuit, Judges Denison, Moorman and Anderson, 27 Fed. (2nd) 333. Again the Circuit Court of Appeals for the Third Circuit, Judges Buffington, Woolley and Davis, in *Buckeye Incubator Co. vs. Hillpot,* 24 Fed. (2nd) 341, in affirming the District Court decision, holding the patent not infringed, distinguished the *current* of the patent from mere *air agitation.*

Finally, it is thus apparent that what petitioner disclaims at page 6 of his brief, in this Court, namely, "agitation of air," as distinguished from forced drafts, or as this learned Court says "air in current form following substantially *defined paths through the tiers of egg trays,*" is not an infringement of the Smith patent. Such is respondents' position, because they have only air in agitation amongst their eggs and trays. It matters not what character the air movements have along the interior walls of the cabinet in respondents' incubator, so long as there is no general current amongst the trays; but only the churned or agitated bodies of air amongst the trays—a sort of air floating condition. We submit such is the case.

IV. Effect of Opinion on Industry.

The opinions of this learned Court in the present case and in the companion Waxham case, give to claim 1 of the Smith patent a broad, sweeping interpretation heretofore not accorded the claim in prior litigation under the patent. In reliance upon the limited interpretation given claim 1 of the patent, years ago by numerous Circuit Courts of Appeals[1] as well as by other Courts, many companies began the manufacture and sale of incubators, the use of which would not infringe claim 1 of the Smith patent when accorded the meaning given thereto in earlier litigation under the patent, but the use of which would infringe the claim of the patent if given the meaning accorded thereto, now for the first time, by this Court, within less than three and a half months from the date of expiration of the patent. In further reliance upon these earlier decisions, thousands of hatchery men throughout the United States have purchased such machines at an expenditure of millions of dollars and have used these machines during past years for hatching hundreds of millions of chicks. These hatchery men have expected to use these same incubators during the present hatching season, running from about the middle of February to the middle or latter part of May, for the hatching of chicks.

According to the Administrators of the Hatchery Code under the Agricultural Adjustment Administration, there are approximately 11,800 hatcheries in the United States operating incubators which have a combined capacity of approximately 286,000,000 eggs. It is conservatively estimated, in the absence of available definite statistics, that

---

1 Buckeye Incubator Co. vs. Petersime, 19 Fed. (2d) 721, 1927; Buckeye Incubator Co. vs. Blum, 27 Fed. (2d) 333, 1928; Buckeye Incubator Co. vs. Hillpot, 24 Fed. (2d) 341, 1928; and other cases.

at least two-fifths of said capacity represents incubators, the past use of which, and the use of which during the present hatching season will be held to infringe the Smith patent, if claim 1 of said patent is accorded the broad interpretation given thereto by this Court in its present opinion. According to the statement of petitioner Smith's brief writers, in their petition for rehearing addressed to the Circuit Court of Appeals for the Eighth Circuit (R. 998), and relating only to incubators of *one manufacture* within limited territory, "* * * within this Eighth Circuit are located at least forty-six hatcheries with a total of not less than 239 Robbins incubators which are substantially identical with those enjoined in the Waxham case."

The vast *bona fide* interests of these many hatchery men throughout the country have become vested rights since the concurring decisions in the Petersime, Blum and Hillpot cases were rendered. The ends of justice will not be carried out if these innocent hatchery men, who established their businesses in reliance upon the interpretation given to claim 1 of the Smith patent in earlier litigation, are to be subjected and exposed to prosecution and harmful litigation and accountings running back as far as six years, which will fall upon them through no fault of their own because of this belated, sweeping interpretation which has now been given to claim 1 of the Smith patent.

That the menace to the hatchery industry is a very real one is shown by the fact that, to our knowledge, over thirty suits[1] brought by the patentee Smith in U. S. District Courts under the Smith patent 1,262,860 are now pending against hatchery men using incubators manufactured by the Lower Incubator Co., of White Pigeon, Mich., The James

---

1 See Appendix for identification of these suits.

Mfg. Co., of Ft. Atkinson, Wis., the Robbins Incubator Co., of Denver, Colo. and the Snow Incubator Co., of Sleepy Eye, Minn., one of the respondents herein. By letters sent out to the hatchery trade at large, enclosing copies of the opinions in this suit and in the companion Waxham suit, the patentee has given every indication that a multitude of other suits will be brought against hatchery men throughout the country. Attempts have already been made to secure preliminary injunctions in certain of these suits, using the opinions in the present Snow and Waxham suits as a basis for these injunctions. If these injunctions issue to prevent hatchery men from using their incubators during the present season, not only will this be ruinous to these hatchery men themselves, but also to those engaged in industries allied to the hatching industry. The egg and chicken market will be disturbed, through the dumping of hundreds of carloads of eggs on the market, that would otherwise be used in hatching chicks, and also through the great shortage of chickens and later of eggs that is bound to result by failure of hatchery men to use their incubators during the present hatching season.

We respectfully request this Court to take judicial notice of the stated condition of the hatching industry and of the various suits pending in District Courts brought under the Smith patent. We believe the Court is justified in taking such judicial notice.

As staged incubation, at best, is only indirectly or inferentially in the claim by reference to the specification of the Smith patent; as staged incubation, as such, was public property long before Smith's application was filed (see this Court's opinion, p. 312); and as claim 1 recites specifically the step of "applying *a current* of heated air" to the eggs, as distinguished from treatment of the eggs by a general dif-

fusion or churning of the air; it is submitted that claim 1 does not rise to the dignity of a generic claim for a broadly new invention and should not be so considered to the tremendous destruction and loss of the hatching industry. Equity and public policy require that claim 1 of the Smith patent be now given an interpretation consistent with the interpretations accorded thereto by Circuit Courts of Appeals years ago.

V. Request for Court to View Machine Exhibits in Operation.

At the trial of the case before the District Court, there were introduced into evidence as Defendants' Exhibits H and F, respectively, two full sized incubators, Exhibit H of which was a commercial Smith incubator and Exhibit F of which was a commercial Snow incubator, the use of which was complained of by the complainant. Both of these machine exhibits were installed in the court room of the Circuit Court of Appeals for the Eighth Circuit at St. Louis, Mo., at the time of the hearing before that Court, and the machines in operation were fully demonstrated to the Court, so that the Court could compare the two machines and fully understand the air movements in the Snow machine. The Court was greatly interested in these machines and, undoubtedly, observation of the same greatly influenced the decision by the Circuit Court of Appeals in the present case.

These machine exhibits are still available and, on two weeks' notice, they can be brought to Washington, set up for operation and demonstrated to members of this Honorable Court at a time and place convenient to the Justices. In view of the importance of the decision in this case, and in the companion Waxham case, to the entire hatching indus-

try, request is hereby respectfully made that this Court, or members of the same, view these machine exhibits in operation prior to the time that this petition for rehearing is acted on. The Court can then, from actual observation, determine whether or not the air movements in respondents' machine are in "current" form within the meaning of the claim.

For the various foregoing reasons, it is respectfully requested that this petition for rehearing be granted.

Respectfully submitted,

RALPH E. WILLIAMSON,
GEORGE F. WILLIAMSON,
Counsel for Respondents.

Minneapolis, Minn.,
Feb. 8, 1935.

The undersigned counsel for respondents, certify that the above petition for rehearing is, in our judgment, meritorious and based upon adequate and sufficient reasons, and is not for the purpose of delay.

RALPH E. WILLIAMSON,
GEORGE F. WILLIAMSON,
Counsel for Respondents.

APPENDIX.

Suits Under Smith Patent 1,262,860 Now Pending in District Courts.

Smith vs. Beery (Midland Hatcheries), D. C. Ohio (Columbus), Doc. 1097.

Smith vs. Hall, et al. (Hall Bros.), D. C. Conn. (New Haven), Doc. E. 2369.

Smith vs. F. J. LeMieux and Lapant Hatcheries, Inc., D. C., E. D. Wis., Milwaukee, Doc. 4387.

Smith vs. G. A. Leader (Leader Farms), D. C. Pa. (Scranton), Doc. 1120.

Smith vs. R. W. Hankins (Hankins' Hatchery & Dairy), D. C., W. D. Okla. (Oklahoma City), Doc. E. 1628.

Smith vs. C. L. Capper (Capper's Hatchery), D. C., N. D. Iowa, E. D. (Dubuque), Doc. E. 225.

S. B. Smith vs. H. F. Garbisch, et al. (Maple Dale Hatchery), D. C. Minn. (Winona), Doc. E. 335.

Smith vs. J. A. Deavenport (Deavenport Poultry Farm), D. C. Colo. (Denver), Doc. 10335.

Smith vs. W. G. Lewis and Lincoln Hatcheries Co., Inc., D. C. Nebr. (Lincoln), Doc. E. 492.

Smith vs. J. L. Russell (Russell Poultry Yards), D. C. Oreg. (Portland), Doc. E. 9463.

Smith vs. C. E. Weidler (Golden Rule Hatchery), D. C. Kans. (Topeka), Doc. 1897-N.

Smith vs. C. A. Sims, et al. (Thornwood Poultry Yards), D. C., S. D. Ind. (New Albany), Doc. E. 89.

Smith vs. L. W. Street (Street's Hatchery & Poultry Farm), D. C. Minn., 4th Div., Doc. E. 2723.

Smith vs. C. Barlow, et al. (Barlow and Sons), D. C. Kans., 2nd Div., Doc. 754-N.

Smith vs. E. A. Fitting, et al. (Olmsted County Hatchery),

D. C. Minn. (Winona), Doc. E. 325.

Smith vs. M. Ladd (Swift County Hatchery), D. C. Minn., 4th Div., Doc. E. 2711.

Smith vs. L. A. Austin (The Austin Hatchery), D. C., S. D. Calif. (Los Angeles), Doc. E. 245-M.

Smith vs. Fontana Farms Co., D. C., S. D. Calif. (Los Angeles), Doc. E. 244-M.

S. B. Smith vs. The Buckeye Incubator Co., D. C., N. D. Ohio, E. Div., Doc. 4022, filed Oct. 9, 1931.

Smith vs. Miller Hatcheries, Inc., D. C., S. D. Iowa (Creston), Doc. E. 4108.

Smith vs. L. Auerensen (Ridgeville Hatchery), D. C., N. D. Ohio, E. Div., Doc. E. 5014.

Smith vs. C. A. Engel (Engel's Hatchery), D. C. Kans. (Topeka), Doc. 1905-N.

Smith vs. D. Middleton (Middleton Hatchery), D. C., S. D. Ohio (Dayton), Doc. E. 364.

Smith vs. H. F. Hughes, et al. (Hughes & Son Hatchery), D. C. Oreg. (Portland), Doc. E. 9494.

Smith vs. V. Burbridge, D. C., N. D. Iowa, E. Div., Doc. E. 227.

Smith vs. L. W. Clark (Petaluma Hatchery), D. C., N. D. Calif. (Sacramento), Doc. 1198-S.

Smith vs. H. Atkins (Atkins Farm Hatchery), D. C., S. D. Iowa (Davenport), Doc. 4137.

Smith vs. R. R. Boots (Greenfield Hatchery), D. C., S. D. Ind. (Indianapolis), Doc. 1563.

Smith vs. C. W. Johnson (Johnson Hatchery), D. C., S. D. Ind. (Terre Haute), Doc. E. 149.

Smith vs. J. F. Erdley, et al. (Wray Hatcheries), D. C. Colo. (Denver), Doc. 10386.

Smith vs. E. B. Arnold, D. C., N. D. Calif. (San Francisco), Doc. E. 37860-S.

In the Supreme Court of the United States

OCTOBER TERM, 1934.

No. 102.

SAMUEL B. SMITH,
Petitioner,

vs.

E. H. SNOW and E. H. SNOW, doing business as SNOW'S HATCHERIES and SNOW'S INCUBATOR COMPANY,
Respondents.

MEMORANDUM IN ANSWER
to
PETITION FOR REHEARING.

We beg leave to file the following brief answers to the five points recited by the respondents as grounds for rehearing:

I.

It is, of course, impossible, to secure the transfer of "units of heat" * * * "from the eggs in the more advanced stage of incubation to those in the less advanced stage" as called for by claim 1, unless the eggs in the incubation chamber are set at brief intervals. This is "staged incubation" as defined by this Court, and that is all that is required. This Court has held that the result recited is not dependent upon any particular order or arrangement of egg, and has held that the patentee is not confined to the particular procedure outlined in the specification of the patent. It follows necessarily that the particular "staged incubation

of the specification'' was not included in the claim, neither by intention of the patentee, nor by the necessities of the case. The prior art is devoid of the combination of staged incubation *in any form* with the forced circulation of air, and it is not necessary, in order to hold validity, to confine the claim to any particular setting in staged incubation. As this Court said (p. 12) in referring to the prior art:

> ''Such rudimentary experiments with isolated elements of Smith's combination did not anticipate his invention.''

The effect and meaning of the clause at the end of the claim—''for the purpose specified''—was fully treated at page 43 of our main brief in this case, and will not be repeated here.

II.

This Court has given its estimation of the Smith invention in no uncertain terms. The complete revolution worked in this art by Smith's invention—the combination of staged incubation and forced draft—entitles the patent to the liberal construction which has been accorded it. This second ground urged by the respondents is directly contradictory to the Court's holding that:

> ''If the matter were doubtful, it is plain from what has been said that the character of the patent and its commercial and practical success are such as to entitle the inventor to broad claims and to a liberal construction of those which he has made.'' (p. 10.)

III.

The Court thoroughly disposed of the respondents' former contention that they did not employ current movement of air. This portion of the petition is a mere re-hash of the old arguments. The proofs in this case, reviewed by this Court, showed that the air, in respondents' incu-

bator, moves in "current form" through the egg trays. Confusion of air movements in the corridor or at isolated points of the chamber has been held immaterial (p. 14), as of course it is. Claim 1 calls for the application of a current of air to the eggs, and this the respondents employ.

IV.

The fourth ground set forth in the petition merely emphasizes that the Smith invention revolutionized the art of incubation, and the infringers have been legion. That the infringement of the patent has been wide spread emphasizes the fundamental character and value of Smith's invention but is no excuse, nor does it assist the respondents here to point to the fact that numerous others also infringed.

V.

The request for visual demonstration of the incubators is impracticable. The current movement of air in the respondents' machine has been carefully studied, analyzed and portrayed in the various exhibits in the Record.

CONCLUSION.

We trust that, for the reasons set forth in the Petition for Immediate Mandate in the *Waxham* case (No. 208) this Court will promptly dispose of this petition for rehearing. Surely the patentee's right to protection in his invention is paramount to the claim of the infringers. The petition for rehearing is patently for the purpose of staving off the final day of reckoning, no other useful purpose would be served, and the petition should be denied.

Respectfully submitted,

NEWTON D. BAKER,
ALBERT L. ELY.

CORRECTED COPY

p. 12

SUPREME COURT OF THE UNITED STATES.

No. 102.—October Term, 1934.

Samuel B. Smith, Petitioner,
vs.
E. H. Snow and E. H. Snow, doing business as Snow's Hatcheries and Snow's Incubator Company.

On Writ of Certiorari to the United States Circuit Court of Appeals for the Eighth Circuit.

[January 7, 1935.]

Mr. Justice Stone delivered the opinion of the Court.

Certiorari was granted, — U. S. —, to review a decree of the Circuit Court of Appeals for the Eighth Circuit, 70 F. (2d) 564, which reversed the decree of the district court and held valid, but not infringed, the first claim of the Smith Patent, No. 1,262,860, of April 16, 1918, for an improved apparatus and method for the incubation of eggs.[1] The Court of Appeals for the Ninth Circuit held the same claim valid and infringed in *Waxham* v. *Smith*, 70 F. (2d) 457, in which case certiorari was also granted, — U. S. —. The question thus presented is one of the scope of the claim.

Only so much of the patent as relates to a method for incubation is now involved. Correct appreciation of the contentions made requires a brief exposition of the well-known phenomena which attend the incubation of eggs under natural conditions.

[1]The patent has been extensively litigated. Claim 1 has been held valid and infringed in Buckeye Incubator Co. *v.* Wolf, 291 Fed. 253, aff'd 296 Fed. 680 (C. C. A. 6th); Buckeye Incubator Co. *v.* Cooley, 17 F. (2d) 453 (C. C. A. 3rd); Miller Hatcheries, Inc. *v.* Buckeye Incubator Co., 41 F. (2d) 619 (C. C. A. 8th); Smith *v.* Jensma, 1 F. Supp. 999 (D. C.); Waxham *v.* Smith, 70 F. (2d) 457 (C. C. A. 9th). It has been held valid, but not infringed, in Buckeye Incubator Co. *v.* Blum, 17 F. (2d) 456, aff'd 27 F. (2d) 333 (C. C. A. 6th); Buckeye Incubator Co. *v.* Petersime, 19 F. (2d) 721 (C. C. A. 6th); Buckeye Incubator Co. *v.* Hillpot, 22 F. (2d) 855, aff'd 24 F. (2d) 341 (C. C. A. 3d); Boling *v.* Buckeye Incubator Co., 33 F. (2d) 347, reversed on other grounds, 46 F. (2d) 965 (C. C. A. 6th); Snow *v.* Smith, 70 F. (2d) 564 (C. C. A. 8th).

The period for hatching eggs of the domestic hen is twenty-one days. The eggs are cold at the beginning of the period of incubation, although at that time generation has already progressed slightly. Continuation of this process and successful incubation depend upon the application of heat to the eggs, and the maintenance of their temperature at not less than body heat, about 100° F., and not more than 105° F. Any substantial divergence from this range of temperature results in deterioration or death of the embryo, and consequent failure of the hatching process. If the temperature is maintained within this range, the eggs during the first ten days of the period absorb heat required to generate and maintain the life of the embryo. The eggs are then said to be endothermic or heat absorbing. From the eleventh day until the end of the period the embryo has developed to a point at which the egg generates more heat than is needed to keep the embryo alive. They are then said to be exothermic. From that time on the excess heat is given off to the surrounding air or to objects in contact with the eggs, if at a lower temperature than the eggs.

The development of heat accompanies the oxidation of food elements within the egg, in consequence of which it gives off carbon dioxide during the period of incubation and absorbs oxygen from the external air, both of which pass through the shell of the egg and its lining membrane. During the period of incubation there is also gradual evaporation of moisture from the egg, which tends to reduce its temperature slightly. The best results are obtained if the total evaporation during incubation does not exceed about 15%. Evaporation in excess of that amount affects the embryo adversely, the chick when hatched being undeveloped and lacking normal strength.

Successful artificial incubation therefore involves conformity to three principal requisites: the maintenance of proper temperature during the period of incubation, the prevention of excessive evaporation of moisture, and the supply of an adequate amount of oxygen, which involves also the removal from the incubator of the carbon dioxide which results from oxidation of the contents of the egg.

The artificial incubation of eggs is an ancient art. It appears to have been known to the Egyptians two thousand years ago, and for a comparable period to the Chinese. Until Smith, the patentee, carried on his experiments, the effort had been generally to reproduce

as nearly as practicable the natural conditions of incubation. In practice eggs, in relatively small number, seldom more than three hundred and usually less, were placed, on the same level, in a cabinet with heating means above the eggs, so that the temperature above the eggs was maintained at a higher point, about 103° F., than that below. To secure the requisite exposure of the eggs to the higher temperature, it was necessary, in the course of incubation, to turn the eggs frequently, as is done by the hen in nature. Provision was made for supplying fresh air to the cabinet and for humidifying the air within the cabinet. All incubators were of the still air type; that is to say, the only movement of air within the incubator was that caused by variations of temperature at different points within the cabinet, resulting in some transmission of heat by radiation or convection. The opinion seems to have prevailed that the presence of currents of air either within or surrounding the cabinet was harmful. Successful operation of this method required nice adjustments of the heating means so as to avoid overheating as the eggs passed into the more advanced stages of incubation, reaching their highest temperature about the seventeenth day.

Smith conceived the idea, embodied in his patent, of setting the eggs in staged incubation within the cabinet and applying to them, in convenient arrangement for that purpose, a current of heated air, propelled by means other than convection. Staged incubation is the successive setting of eggs in the same cabinet at brief intervals, of about three days. At the twenty-first day there would thus be several settings of eggs in the incubator, each at a different stage of incubation, part in the endothermic stage and part in the exothermic. Smith arranged the egg trays or racks in tiers, so that air could be freely circulated among the eggs. He subjected them to a continuous current of air of the requisite constant temperature of about 100° F., propelled by a fan so that it would circulate freely and repeatedly throughout the cabinet. The heat of the eggs in the later stages of incubation was thus carried by the circulating air of lower temperature to the cooler eggs, in the earlier stages, so that there was a continuous tendency to equalize the temperature throughout the cabinet at approximately the temperature of the introduced current of air.

Before Smith there had been efforts to set eggs in staged incubation, but without practical success, because of the difficulties of

securing adequate heat distribution within the incubator. He was the first to apply mechanically circulated currents of air to eggs so arranged. He followed this procedure in conjunction with the use of a restricted opening for the elimination of foul air. By this combination the difference in temperature of the eggs was equalized within the desired range throughout the incubator during the period of incubation, the air within the incubator was gradually replaced by fresh air, and the moisture of the eggs was conserved. His method thus solved the major problems of artificial incubation in a highly efficient manner. It was novel and involved invention. See *The Barbed Wire Patent Case*, 143 U. S. 275, 283; *Krementz* v. *The S. Cottle Co.*, 148 U. S. 556, 559, 560.

That it was invention is not seriously disputed here, and of the many courts which have passed on the patent none has denied its validity. The new method had certain marked advantages over earlier ones. It was possible to carry on the process of incubation continuously by placing fresh eggs in the incubator at intervals, as those of the most advanced stage hatched and the new born chicks were removed. It was possible to apply heated air to the eggs at a constant temperature, thus avoiding the necessity of varying by nice adjustments the temperature of the applied air, so as to conform to the varying temperatures of the eggs as they passed through successive stages of incubation. As the egg racks or trays could be placed in tiers, instead of on a single level, it was possible to arrange them more compactly and greatly increase the number of eggs in a single incubator. Before staged incubation, as developed by Smith, it had not been practicable to operate incubators of a capacity of more than about three hundred eggs. By use of the new method it is possible to operate successfully an incubator containing as many as 52,000 eggs, and the percentage of eggs successfully hatched by artificial incubation has been materially raised.

The commercial success of the new method was immediate and striking. At first the inventor devoted himself to developing his own hatchery for the use of the new method; it was the largest in existence, with a capacity of over 1,000,000 eggs. In 1922 he began the manufacture and sale of the new incubator. In ten years he, and a corporation which he had organized for the purpose, had made sales of incubators aggregating about $24,000,000, having a total egg capacity of over 188,000,000. The old type of incubation, with eggs arranged at a single level, all in a single stage of incubation, has thus become obsolete.

That the method employed in the Smith type of incubator was novel and revolutionary in the industry is not challenged. The question presented here is what scope may rightly be given to Claim 1 of the patent; whether the petitioner has drafted it in such form as to secure the fruits of his invention. Claim 1 reads as follows:

"1. The method of hatching a plurality of eggs by arranging them at different levels in a closed chamber having restricted openings of sufficient capacity for the escape of foul air without undue loss of moisture and applying a current of heated air, said current being created by means other than variations of temperature and of sufficient velocity to circulate, diffuse and maintain the air throughout the chamber at substantially the same temperature, whereby the air will be vitalized, the moisture conserved and the units of heat will be carried from the eggs in the more advanced stage of incubation to those in a less advanced stage for the purpose specified."

It will be observed that the claim, standing by itself, asserts the essential elements of the method of incubation to be: (a) the arrangement of the eggs at different levels in staged incubation in a closed chamber, having restricted openings of sufficient capacity for the escape of foul air without undue loss of moisture; (b) the application to the eggs of heated air in a current created by means other than variation of temperature; and (c), as marking the boundaries of the claim, the current of air is to be of sufficient velocity to circulate, diffuse and maintain the air throughout the chamber at substantially the same temperature whereby the air will be vitalized, moisture conserved, and the units of heat carried from the eggs in the more advanced stage to those in the less advanced.

To avoid petitioner's charge of infringement two main contentions are pressed by respondents. First, that Claim 1 is restricted to an arrangement of the eggs in such order with respect to the direction of the propelled current of heated air that it will first come in contact with the more advanced eggs. Thus construed, respondents do not infringe, as concededly the movement of air within their incubator does not pass to the eggs in staged incubation in any particular order. Second, that the movement of air in respondents' incubator, produced by the agitating action of fans or propellers, does not result in "a current of air" traveling in a constant predestined path within the meaning of Claim 1. In

passing upon these contentions it is necessary to ascertain the proper scope of Claim 1, and to determine whether the characteristic features of respondents' incubator come within its scope. Respondents maintain that the claim is restricted in its scope in the manner indicated above (a) by the disclosures of the patent itself, (b) by the prior art, including the patentee Smith's own prior public usage, and (c) by estoppels arising from the file wrapper record of the patent.

1. The court below rested its decision on its interpretation of Claim 1, read in the light of the disclosures of the patent, as restricting the patented method to a particular arrangement of the eggs, whereby the current of heated air, after being introduced into the cabinet, first comes in contact with the eggs in the most advanced stage of incubation. It reached this conclusion by comparison of that part of the claim, which speaks of the units of heat as being "carried from the eggs in the more advanced stage of incubation to those in a less advanced stage," with the specifications, which disclose an arrangement of the eggs such that the introduced current of heated air first passes to the more advanced eggs. As respondents' incubators have no such arrangement of the eggs, and as in consequence the forced draft of heated air does not reach the eggs in any particular order, the court held that the respondents do not infringe Claim 1.

The patentee, obedient to the command of the statute (R. S. § 4888), gave such description of the manner of using his discovery as would enable others skilled in the art to use it. The specifications first describe generally the method by which the eggs in staged incubation are arranged in tiers and subjected to forced circulation of heated air through the incubating chamber. The patent states: "The temperature of circulating air should be such as will prevent the eggs in the early stage of incubation from falling below 100° and the speed or velocity of the circulating air should be such as to carry the heat away from the eggs in the later stage of incubation and thereby hold the temperature of those eggs at 105° or slightly below that. It is manifest that the temperature will remain practically the same throughout the column of eggs, but the air is impelled with sufficient velocity to carry the heat away from the eggs which happen to be in the advanced stage of incubation." The drawings and specifications show the eggs arranged in tiers on either side of the chamber, with an open space or corridor be-

tween, at the top of which a revolving fan forces the air downward in the open space of the corridor. Above the fan is a valve-controlled air intake for the introduction of fresh air and above the trays of eggs on either side are shown "outlets for the release of foul air . . . of such restricted capacity as to prevent the undue escape of moisture."

It is true that drawings and specifications indicate a particular arrangement of the eggs from the top to the bottom of the tiers of trays, according to the stage of the incubating process, the eggs being arranged progressively from the least advanced, placed at the top, to the most advanced, placed at the bottom of the tiers. They indicate also that as the eggs most advanced are hatched, they are to be replaced by moving downward the trays containing the several successive settings of eggs which are in earlier stages of incubation. They also speak of a "column" of air of such speed as to keep the temperature substantially uniform, and show curtains hanging from the top of the chamber covering the ends of the trays on either side of the corridor and extending to a point a short distance above the floor.

With this arrangement the air would be propelled downward to the floor of the chamber, gaining access to the eggs by passing beneath the ends of the curtains to the trays of eggs at the bottom of the tiers. So much of the air as was introduced through the intake would thus reach the more advanced eggs first. It would then be deflected upward through the egg trays to the top of the chamber, and so much of it as did not pass out through the restricted capacity outlets located at the top of the tiers of trays would be returned to the fan to be propelled again through the described circuit.

We may take it that, as the statute requires, the specifications just detailed show a way of using the inventor's method, and that he conceived that particular way described was the best one. But he is not confined to that particular mode of use since the claims of the patent, not its specifications, measure the invention. *Paper Bag Patent Case,* 210 U. S. 405, 419; *McCarty* v. *Lehigh Valley R. Co.,* 160 U. S. 110, 116; *Winans* v. *Denmead,* 15 How. 330, 343. While the claims of a patent may incorporate the specifications or drawings by reference, see *Snow* v. *Lake Shore Railroad Company,* 121 617, 630, and thus limit the patent to the form described in the specifications, it is not necessary to embrace in the claims or de-

scribe in the specifications all possible forms in which the claimed principle may be reduced to practice. It is enough that the principle claimed is exemplified by a written description of it and of the manner of using it "in such full, clear, concise, and exact terms" as will enable one "skilled in the art to make, construct, compound and use the same."

Here the specifications showed an arrangement of the eggs and a means of guiding the current of air so that it would reach the most advanced eggs first. But neither the arrangement nor the means of guiding the current of air are requisite to the application of the principle which Smith discovered and claimed. Without either, the heated air may be given, as Claim I prescribes, "sufficient velocity to circulate, diffuse and maintain the air throughout the chamber at substantially the same temperature whereby . . . the units of heat will be carried from the eggs in the more advanced stage of incubation to those in a less advanced stage." Claim 1 made no mention of curtains or any column of air or means of guiding the current of air, and the inventor made no claim for any particular arrangement of the eggs, except that they should be at different levels. Moreover, while the specifications and drawings show a particular arrangement of the eggs and a particular direction of the current, nowhere, in specifications or claim, is it stated either that the direction of the current is material or, what is the equivalent, that the order in which it reaches the eggs is material.

Only by resort to the assumption that heat units could not be carried from the more advanced to the cooler and less advanced eggs, unless the initially introduced air first came in contact with the more advanced, is it possible to support the conclusion of the court below and read the claim as calling for a particular arrangement which would enable the air current to reach the advanced eggs first. Such, of course, would be the case only if the current of air were to make a single circuit, and either remain at its end in contact with the cooler eggs or pass out of the incubator altogether. Neither occurs in petitioner's machine, and there is no reason to suppose that either would produce the desired equalization of temperature. The specifications and claim both contemplate a continuous circulation of the current of heated air through the chamber, which, regardless of its direction, would continuously operate, by repeated contacts with the eggs in all stages, to equalize

the temperature throughout the chamber by carrying heat units from the warmer to the cooler eggs.

The claim conforms to the specifications in prescribing "restricted openings of sufficient capacity for the escape of foul air without undue loss of moisture." The amount of foul air allowed to escape through the outlet of restricted capacity necessarily controls the amount of air taken in. In petitioner's commercial machines, regulated to produce the prescribed result in air vitalization and conservation of moisture, the interchange of foul air for fresh is from ½ of 1% to 3% of the air content for each complete circuit of the chamber. This means that the air content of the chamber must make the circuit many times, theoretically from 33 to 200, before an equal volume of fresh air would be drawn in through the intake. Such continuous circulation of the air at constant temperature, lower than that of the more advanced eggs and higher than that of the less advanced, tends to produce the equalization of the temperature of the eggs by flow of heat units from the warmer eggs to the cooler, regardless of the direction of the current in the circuit, and regardless of the particular stage of the eggs which it reaches first. With other factors constant, the efficiency of this equalization process would depend upon the velocity of the current. The statement of Claim 1 is that the current of air is to be "of sufficient velocity to circulate, diffuse and maintain the air throughout the chamber at substantially the same temperature." The specifications state: "It is obvious that the fans can be so arranged and can be operated at such speed as to cause the hot air to circulate fast enough to keep the temperature throughout the chamber between the limits of 100° and 105°."

It is evident that Claim 1 does not prescribe that the current of air shall be propelled by any particular means, except that it shall be by means other than variation of temperature, nor does it prescribe that the means of propulsion shall be given any particular location, or that the current of air shall be guided by any particular means or given any particular direction. The omission of these requirements from Claim 1 is the more pointed as the other claims of the patent speak in particular of a power-driven fan, of the location of the fan, of curtains and a partition obviously intended to give direction to the current of air, of a vertically directed current of air, and of air circulating from the bottom of the chamber into the parts of it occupied by the tiers

of egg trays. Thus by striking and obviously intended contrast with other claims, Claim 1 covers broadly the essential elements of the Smith invention as we have already described it. *Symington Co.* v. *National Malleable Castings Co.*, 250 U. S. 383, 385; *Lamson Consolidated Store Service Co.* v. *Hillman*, 123 Fed. 416, 419 (C. C. A. 7th); *Wm. B. Scaife & Sons Co.* v. *Falls City Woolen Mills*, 209 Fed. 210, 214 (C. C. A. 6th).

Examination of the claim, in the light both of scientific fact and of the particular form in which the petitioner reduced the claim to practice as described in the specifications, makes it plain that the claim does not call for a particular order or arrangement of the eggs in staged incubation in the incubator, or that the propelled current should reach them in any particular order, or that it should be guided, controlled or directed by any particular means, or in any particular manner other than that it should be of sufficient velocity to produce the results prescribed by the claim. If the matter were doubtful, it is plain from what has been said that the character of the patent and its commercial and practical success are such as to entitle the inventor to broad claims and to a liberal construction of those which he has made. *Moreley Machine Co.* v. *Lancaster*, 129 U. S. 263, 273-277; *Eibel Co.* v. *Paper Company*, 261 U. S. 45, 63; *Winans* v. *Denmead, supra*, 341. In such circumstances, if the claim were fairly susceptible of two constructions, that should be adopted which will secure to the patentee his actual invention, rather than to adopt a construction fatal to the grant, *Keystone Manufacturing Co.* v. *Adams*, 151 U. S. 139, 144, 145; *McClain* v. *Ortmayer*, 141 U. S. 419, 425.

2. We find nothing in the file wrapper defense to disturb our conclusion as to the correct interpretation of Claim 1. It is a familiar rule that a patentee cannot broaden his claim by dropping from it an element which he was compelled to add in order to secure his patent. *I. T. S. Rubber Co.* v. *Essex Rubber Co.*, 272 U. S. 429, 443; *Smith* v. *Magic City Club*, 282 U. S. 784, 789, 790. But the file wrapper lends no support for the application of this rule to petitioner's Claim 1.

The history of Smith's application in the Patent Office is a long one. Four groups of method claims were successively presented to the Patent Office and three were successively rejected. The fourth group ultimately matured into Claims 1, 2 and 3 of the patent. It suffices to say that Claims 1 and 25 of the first group claimed

broadly, "The method of hatching eggs by arranging the eggs in a column and applying heated air forced about the eggs, the heated air being adapted to the eggs in various stages of incubation," and "The method of hatching eggs by arranging the eggs in a column one above the other and forcing heated air through said column." In due course the broad claims thus asserted were modified and narrowed by the inclusion of new elements, until they appeared in the form of Claim 1 of the patent. But, as we have seen, none of these additions involve any particular order of arrangement of the eggs or any particular direction or control of the air current, except that the current is to be "of sufficient velocity to circulate, diffuse and maintain the air throughout the chamber at substantially the same temperature."

It is an illuminating fact that the entire written argument filed in support of Claim 1, as it was finally presented to the Patent Office and allowed, makes no reference to any order or arrangement of the eggs, or to shifting the location of the eggs in the incubator, no reference to the location of the fan, the direction of the air current, or to curtains or partitions. The features emphasized were the superiority, over drafts caused by variations of temperature, of "current produced by mechanical means" applied to eggs in staged incubation arranged at different levels, the conservation of moisture, and the elimination of foul air by the restricted air outlets, all features of Claim 1 which are characteristic of both petitioner's and respondents' incubators. We find nothing in the file wrapper to suggest that any addition was made to Claim 1 to restrict the patent to any particular order of arrangement of the eggs or any particular direction or means of control of the current of air, other than its velocity, and nothing to estop the patentee from asserting that the claim is not restricted by such features. See *Baltzley* v. *Spengler Loomis Mfg. Co.*, 262 Fed. 423, 426 (C. C. A. 2nd); *National Hollow B. B. Co.* v. *Interchangeable B. B. Co.*, 106 Fed. 693, 714 (C. C. A. 8th). It is of no moment that in the course of the proceedings in the Patent Office the rejection of narrow claims was followed by the allowance of the broader Claim 1. *Westinghouse Electric & Mfg. Co.* v. *Condit Electrical Mfg. Co.*, 194 Fed. 427, 430 (C. C. A. 2nd).

3. Claim 1 is not limited by the prior art. It is urged that there was disclosure by Smith by public use more than two years before his application for the patent. At the time indicated

he used commercially an incubator arranged in three completely separated compartments in each of which there was circulation of the air by a fan. But there was no staged incubation in any single compartment.

The German patent, Stulik, No. 155,917, issued in 1901, disclosed the arrangement of trays of eggs in staged incubation in an enclosed column or stack, with the endothermic eggs at the bottom. The eggs were subjected to a rising column of heated air, which was allowed to escape at the top of the chimney. There was no forced draft of air, no circulation or re-circulation of air, and in consequence no carrying of heat units from the more advanced eggs at the top to the less advanced eggs at the bottom.

Other patents named, as Winkler, No. 286,756, of 1883, and Zimmer, No. 1,075,747, of 1913, show types of staged incubation, but made no use of a current of air propelled by means other than variations of temperature, and in other respects were so plainly impractical as to call for no extended discussion. This is true also of the description in the 1867 edition of Ure's Dictionary, 652-3, said to represent a method of incubation devised in 1777 by Bonnemain, a Frenchman, and not used since the French revolution, by which eggs in staged incubation were placed in a closed room heated by hot water pipes, but without other means of producing currents of air. Such rudimentary experiments with isolated elements of Smith's combination did not anticipate his invention. See *Smith & Griggs Mfg. Co.* v. *Sprague,* 123 U. S. 249, 255.

Other patents are cited showing varying types of incubators in which the eggs were placed at different levels, but in which the circulation of air through the incubating chamber by means other than variations in temperature is wanting.[2]

The Proctor & Knowles Patent, No. 426,321 of 1890, and the Schwartz Patent, No. 535,175 of 1895, for methods and apparatus for ~~drying~~ conditioning tobacco and other materials, as well as other procedures for ventilation, are so remote from the problems and procedure for hatching eggs as to call for no comment.

This history of the prior art serves to emphasize rather than to discredit the striking advance made by Smith in effecting the combination defined in Claim 1. More than the skill of the art was in-

[2]Guerin, U. S. Patent, No. 3,019, March 30, 1843; Bassini & Heyden, U. S. Patent, No. 330,457, November 17, 1885; Van Keuren, U. S. Patent, No. 1,160,793, November 16, 1915; Bell, U. S. Patent, No. 691,837, January 28, 1902; Koons, U. S. Patent, No. 916,454, March 30, 1909.

volved in combining and adjusting its elements in such fashion as to solve the major problems of artificial incubation. The prior art discloses no application of a continuously circulating current of air to eggs in staged incubation which would restrict Claim 1 with respect either to the arrangement of the eggs or the direction or control of the current of air.

4. There remains the question of infringement. The respondents' machine exhibits a closed chamber, with restricted outlet for the escape of foul air and an intake for fresh air, with eggs arranged at different levels in staged incubation, with a fan-impelled movement of air which circulates and recirculates throughout the chamber. The air moves over and about the eggs, carrying the units of heat from the warmer to the cooler eggs, maintains a substantially uniform temperature throughout the chamber, vitalizes the air and conserves moisture.

As Claim 1 of petitioner's patent is not restricted to any particular order in which the current of air reaches the eggs, respondents do not avoid infringement by interspersing indiscriminately, as they do, the trays of eggs in different stages of incubation. Respondents' claim of non-infringement is thus reduced to the contention that their incubators do not employ circulating currents of air called for by Claim 1. Their emphasis is on the agitation of air in respondents' machine in such a manner that its movement does not follow defined paths through the chamber so as to answer to the description "current of air."

In respondent's machine fans or air propellers are located at either side of the chamber, about mid-way of its height, near the wall and between the wall and tiers of egg trays. They are constructed and operated in such fashion that the air is "drawn" by their action from the central corridor through the tiers of eggs toward the center of the propellers. There, by the centrifugal action of the propellers, it is thrown off the ends of the propeller blades toward the top, bottom and adjacent ends of the chamber. There it is deflected by ceiling, floor and ends of the chamber into the corridor, from whence it is, in due course, again drawn through the tiers of eggs to the propellers. The propellers are operated, and the air moves, continuously. Since the main movement of the air at the top and bottom of the tiers is toward the center corridor, and since the fans draw in air through the middle of the tiers, there are points in the space occupied by the tiers where the movement of the air is toward the corridor until it joins and is turned back by the current moving toward the propellers.

Claim 1, as already stated, does not call for a current of air moving in any particular direction. Assuming, without deciding, that it calls for a current of air so constant in its movement and direction as not to depart substantially from a well defined path, one would expect that a fan operating, as in respondents' machine, within a closed chamber under substantially constant conditions, would produce currents of air without substantial variations of path. No valid scientific reason or explanation is advanced for any different result. Extensive testimony and elaborate arguments are presented to support the contention that notwithstanding the application of force to the air within the closed chamber by the action of respondents' propellers, under practically constant conditions, the results produced are so variable that "the air goes where it 'listeth';" they are not convincing. The conclusion is abundantly supported by evidence that there is a continuous movement of air from the blades of respondents' propellers toward the top and bottom and sides of the chamber, thence to the corridor and thence through the tiers of egg trays back to the propellers, and that this movement achieves the purpose declared in Claim 1, "to circulate, diffuse and maintain the air throughout the chamber at substantially the same temperature." The trial judge so found.

That there is a mixture of the air and some confusion of its movement in the corridor, and that at different levels within the space occupied by the tiers of trays the movement is not in the same direction, is immaterial. It is enough that there is a movement of air in current form following substantially defined paths through the tiers of egg trays, sufficient to effect the desired transfer of heat units. Claim 1 does not prescribe that a current of air is to be maintained throughout the chamber. It calls for the application to the eggs of a current of air "of sufficient velocity to circulate, diffuse and maintain the air throughout the chamber at substantially the same temperature." This respondents accomplish by the currents of air set in motion either directly or indirectly by the movement of the blades of the propellers. The method is that of Smith. Respondents do not avoid infringement of the method by varying the details of the apparatus by which they make use of it. *Cochran* v. *Deener*, 94 U. S. 780, 788; *Tilghman* v. *Proctor*, 102 U. S. 707, 730, 731.

Reversed.